MANTECH NORTH

NSI

DOCUMENT NO. 14-11-431

WALLOPS ISLAND FACILITY

1 TON GANTRY HOIST
and
MAGNETIC CALIBRATION FACILITY HOIST
for
PEGASUS PROJECT

ENGINEERING STRESS ANALYSIS

Document No. 14-11-431

July, 1995

PREPARED BY: Lawrence H. Bennett 10-05-95
NSI Stress Engineer

CHECKED BY: Thomas J. King 10-10-95
NSI Stress Engineer

APPROVED BY: [illegible] 10-12-95
NSI Supervisor

APPROVED BY: C Mattuck 2/27/96
NASA Code 754 Stress Engineer

APPROVED BY: [illegible] 2/27/96
NASA Code 750.0 Recertification Manager

APPROVED BY: C Mattuck 2/27/96
NASA Code 754.1 Head, Structural Dynamics Test Section

Launch Environment Simulation Support Function
NSI Technology Services Corporation
A Subsidiary of ManTech International Corporation
Goddard Space Flight Center
Greenbelt, Maryland 20771

TABLE of CONTENTS

References.....1

Discussion.....1

Results and Conclusions.....2

Figure 1, SPANCO Gantry.....3

Figure 2, Mag/Cal Facility Hoists.....4

Figure 3, Downs Gantry.....5

Table 1, Summary of Stresses & Safety Factors.....6,7

Structural Analysis, Details.....8-35

REFERENCES

(1) Crane Manufacturers' Association of America, CMAA 74-3, **Sturctural Design**

(2) NSS/GO-1740.9B, **NASA Safety Standard for Lifting Devices and Equipment**

(3) Blodgett, **Design of Welded Structures**

(4) The Aluminum Association, **Engineering Data for Aluminum Structures**

(5) American Institute of Steel Construction (AISC), **Manual of Steel Construction and Allowable Stress Design**

DISCUSSION

The NASA Wallops Island Facility will be performing critical lifts involving space flight hardware for the first time on some of its facility hoists. The Pegasus Project will be doing integration and test of its spacecraft sometime within the next year. Per the requirements of Reference (2), these hoists must be qualified for critical lifts via a Failure Modes and Effects Analysis (FMEA), which in part is supported by structural analysis. Required factor of safety on all critical lift items are 3.0 on yield stress and 5.0 on ultimate stress.

This analysis contains calculations for three hoist systems:

(1) An existing one-ton rated crane gantry (SPANCO model) located in Wallops Building 16 (Figure 1)

(2) The Magnetic Calibration Facility (Mag/Cal, Wallops Building 23) existing hoist system (Figure 2)

(3) A proposed one-ton rated crane gantry to be supplied by Downs Crane & Hois Co., Los Angeles, CA (Figure 3)

For items (1) and (3), calculations were made using the methods of Reference (1) for crane gantries. These items are standard A-Frame type portable gantr and have been rated by the manufacturer, but for lesser requirements than th of Reference (2).

Item (2) is a mechanical hoist system consisting of a center-of-building hoi: and pulley support system, a pulley support system at the side of the buildi and a steel drum type winch located on the floor on the side of the building. The cable is nylon, and the supporting structure is aluminum with stainless steel bolts. The center pulley block and tackle system has five turns of cabl for one turn on the side, resulting in a mechanical advantage of 5:1 on load for the center. However, the payload lift range is correspondingly limited tc one-fifth of the drum winch cable length capacity. In its existing state, the takeup on the drum winch is 60 ft, limiting the payload lift range to 12 ft. The hoist system is currently rated by Wallops Recertification as 1000 lbs. center load, and proof tested to 1250 lbs. In order to perform the calculatic on the Mag/Cal hoist system, a filed trip was made to Wallops to examine the structure. Photographs were taken, and measurements were made in place. Additional dimensions and materials were confirmed by Wallops Recertification

Calculations were made on the basis of 2000 lb. load for Items (1) and (3) anc for 1000 lb. for Item (2). Since the Mag/Cal hoist system has been proof test to 1250 lb., a set of calculations were generated for that load and are included in Appendix A.

RESULTS and CONCLUSIONS

Results of the calculations for rated loads are presented in Table 1. Some items as they exist do not meet the required safety factors of 3.0 on yield stress and 5.0 on ultimate stress. These items are discussed with recommendations for resolution as follows:

a. Building M16 Spanco Crane and Gantry: Per CMAA 74-3, the most conservative assumptions were made in terms of load factors. Relaxation of the Dead Load Factor (DLF) and Hoist Load Factor (HLF) to more realistic values would result in achieving the required safet factors for (1) local bending stress of flange due to wheel loads and (2) bending stress of the main S 6 x 12.5 beam.

b. Building 23 Mag/Cal Facility Hoist System Center Support 5/16" swivel bolt: The yield/ultimate stress of this bolt could not be determined in place. Since the material has been determined to be stainless steel, the most conservative ultimate stress for a stainless sttel bolt, 75000 psi, was assumed. As a result, safety factors are less than required. The solution can be either of the following: (1) Chang the bolt to one with known ultimate stress of 120,000 psi or greater, or (2) increase the size of the bolt to 1/2" or greater.

c. Building 23 Mag/Cal Facility Hoist System Center Support Top Plate: Although this item was initially found to be marginally acceptable with SF = 5.15, there is some question as to whether the base materia ultimate stress of 2000 psi is valid, since the part has been welded to the channel sections. Aluminum properties are reduced drastically to about 24000 psi ultimate, or even less, in the heat affected zone of welding. Stiffening of this plate is thus recommended.

Figure 1 - SPANCO Gantry

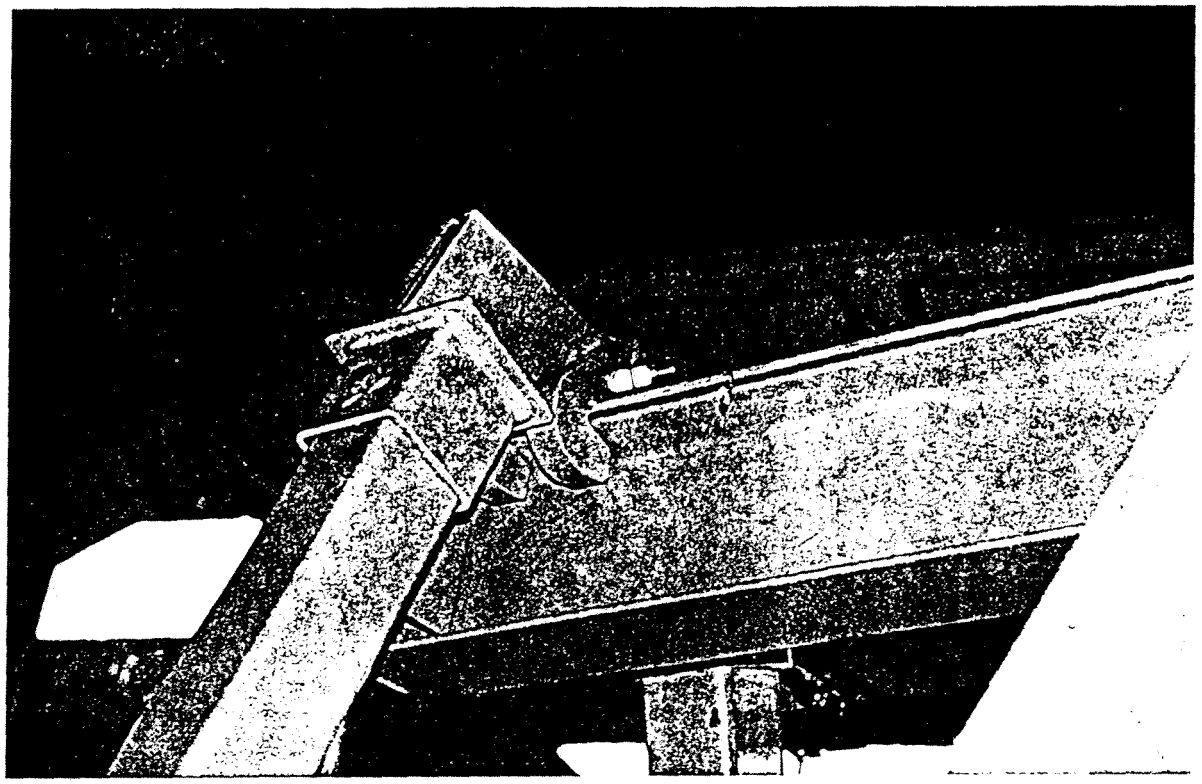

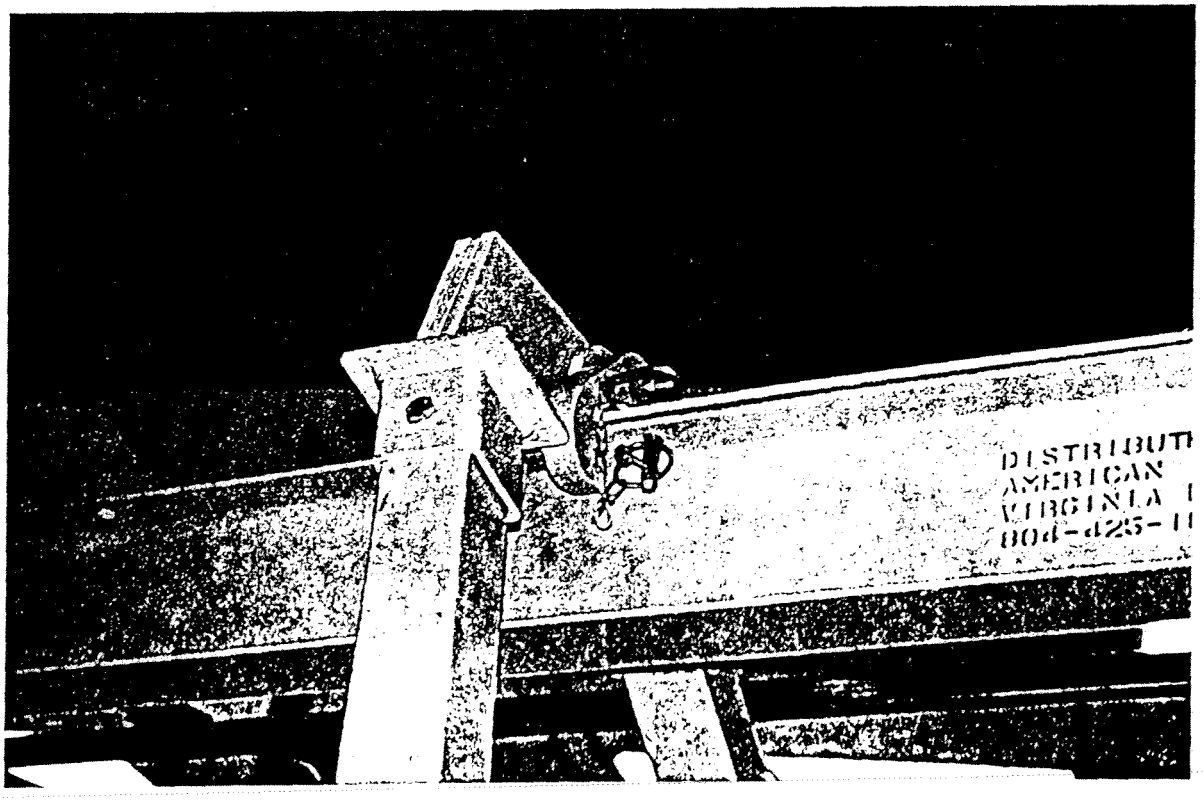

Figure 2
Mag/Cal Facility Hoists

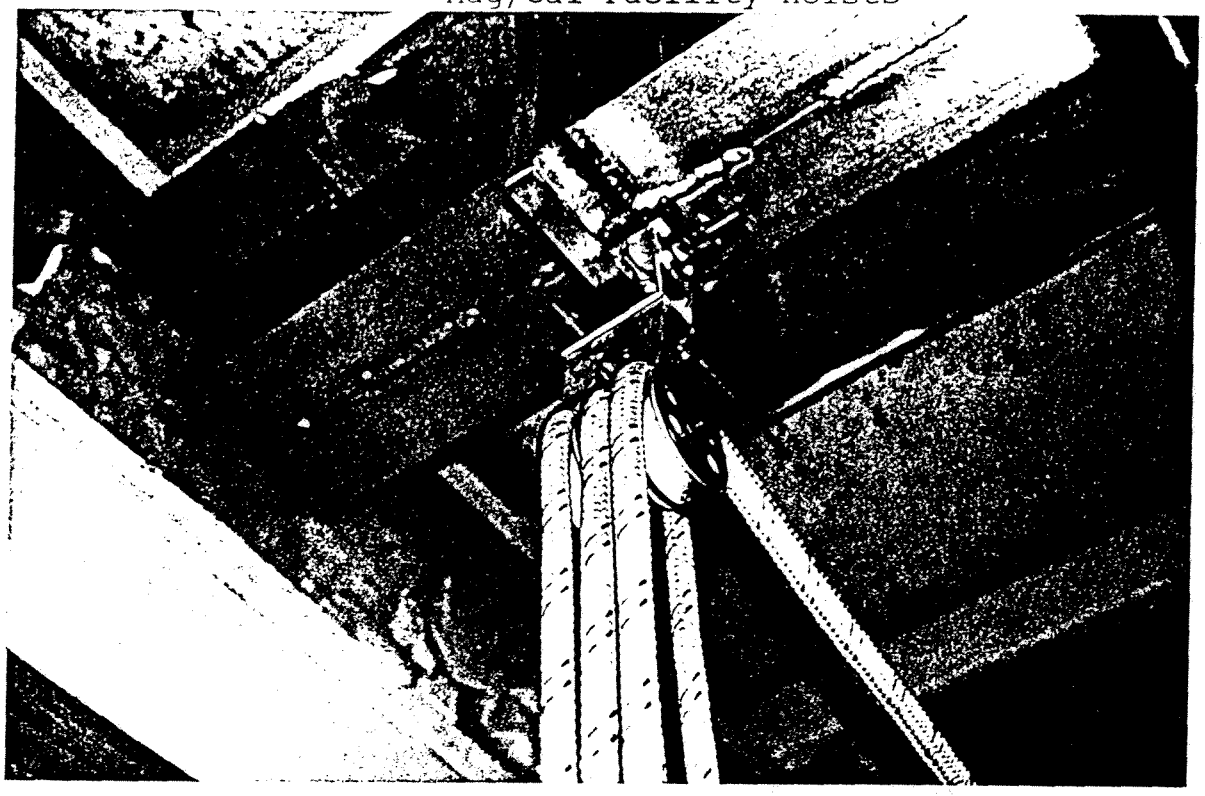

Center Hoist Support

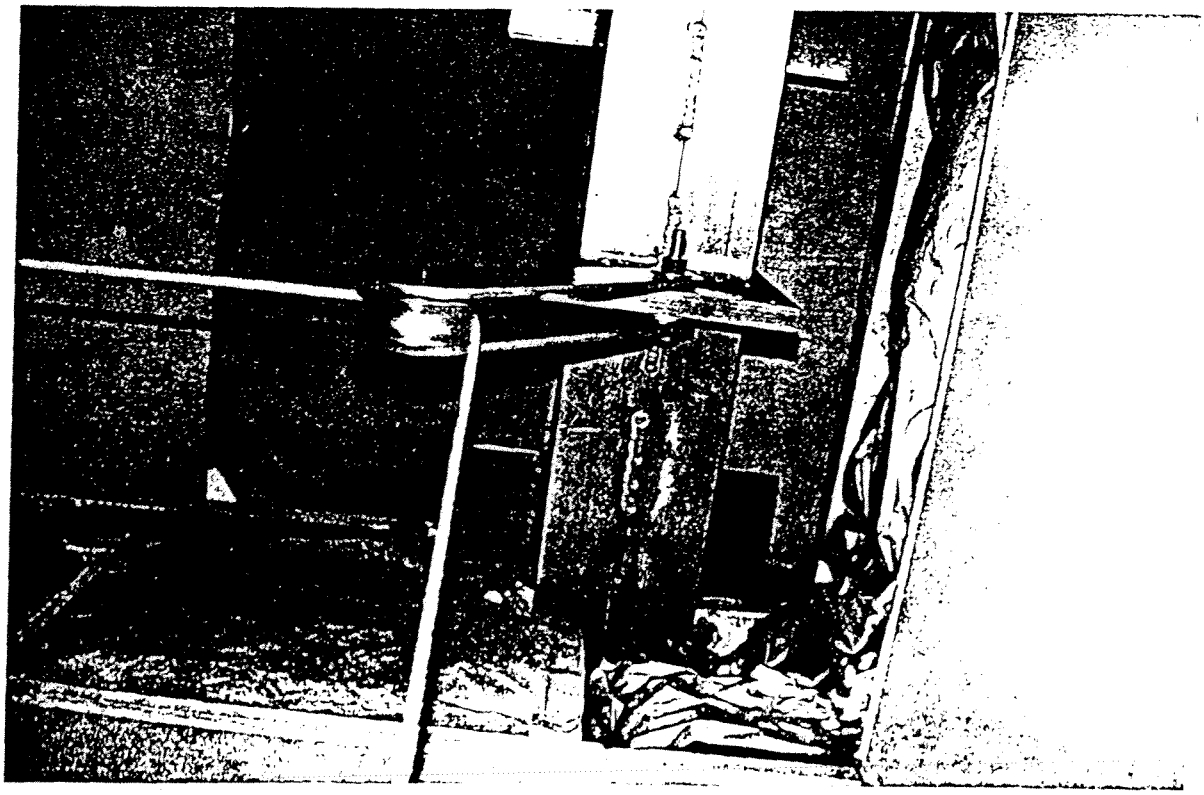

Corner Hoist Support

Figure 3
Downs Gantry

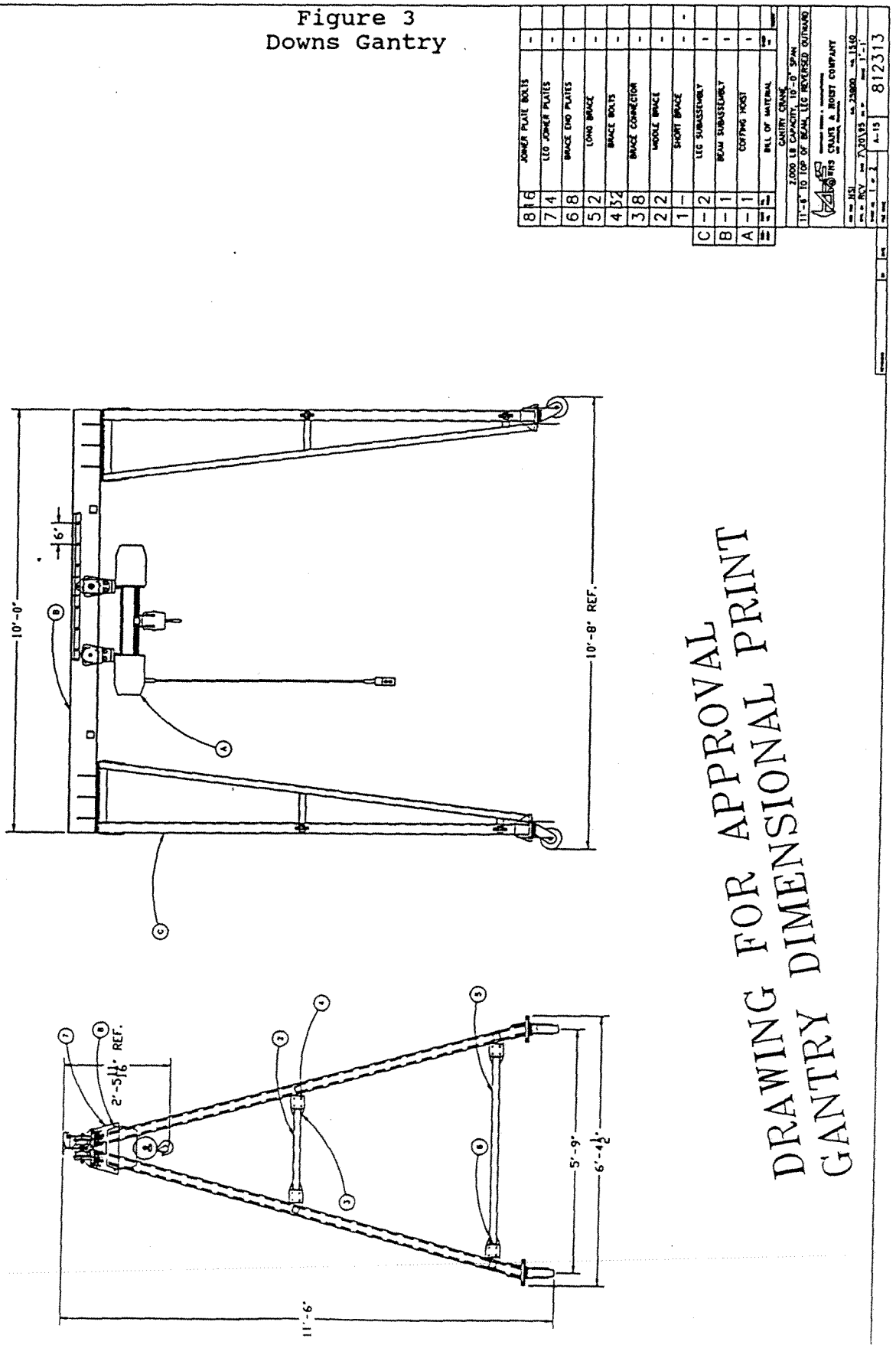

DRAWING FOR APPROVAL
DIMENSIONAL PRINT

Table 1 - WALLOPS ISLAND FACILITY CRANE/HOIST SYSTEMS
SUMMARY OF STRESSES AND SAFETY FACTORS

ITEM	DESCRIPTION	STRESS TYPE	CALCULATED STRESS (psi)	YIELD STRESS (psi)	SAFETY FACTOR on Y.S.	MARGIN of SAFETY on Y.S.	ULTIMATE STRESS (psi)	SAFETY FACTOR on UTS	MARGIN of SAFETY on UTS	PAGE NO.
Building M16 SPANCO Crane Gantry	Local Bending of Flanges due to Wheel Loads	Combined (0)	8136	36000	4.42	0.47	58000	7.13	0.43	9
		Combined (1)	12029	36000	2.99	-0.00	58000	4.82	-0.04	9
		Note: Conservative Assumptions per CMAA 74-3								
	Main Beam S 6 x 12.5	Bending	15655	36000	2.30	-0.23	58000	3.70	-0.26	10
	Truss ST 2.5x2.5x3/16	Compression	1265	45000	35.57	10.86	70000	55.34	10.07	11
		Buckling (lbs)	2074	54923	26.48					11
	Horizontal Brace ST 2 x 2 x 3/16	Axial	612	45000	73.53	23.51	70000	114.38	21.88	11
Building M16 Downs 12323 Crane/Gantry	Local Bending of Flanges due to Wheel Loads	Combined (0)	5797	36000	6.21	1.07	58000	10.01	1.00	22
		Combined (1)	8522	36000	4.22	0.41	58000	6.81	0.36	22
		Note: Conservative Assumptions per CMAA 74-3								
	Main Beam S 8 x 18.4	Bending	8240	36000	4.37	0.46	58000	7.04	0.41	23
	Truss ST 3 x 3 x 1/4	Compression	787	45000	57.18	18.06	70000	88.95	16.79	24
		Buckling (lbs)	2039	46271	22.69					24
	Horizontal Brace ST 2 x 2 x 3/16	Axial	388	45000	115.98	37.66	70000	180.41	35.08	24
	1/2" Grade 5 Bolts	Combined	22723	72000	3.17	0.06	120000	5.28	0.06	25
		Thread Shear	6077	41544	6.84	1.28	69240	11.39	1.28	25
	Top Plate to Truss 1/4" Fillet Weld	Bending	3496	36000	10.30	2.43	58000	16.59	2.32	26

Table 1 - continued

WALLOPS ISLAND FACILITY CRANE/HOIST SYSTEMS
SUMMARY OF STRESSES AND SAFETY FACTORS

ITEM	DESCRIPTION	STRESS TYPE	CALCULATED STRESS (psi)	YIELD STRESS (psi)	SAFETY FACTOR on Y.S.	MARGIN of SAFETY on Y.S.	ULTIMATE STRESS (psi)	SAFETY FACTOR on UTS	MARGIN of SAFETY on UTS	PAC NC
Building 23 Mag/Cal Facility Hoist System Corner Support	5/16" SS Bolt	Double Shear	1775	25965	14.63	3.88	43275	24.38	3.88	13
	Pulley Housing	Tensile	566	35000	61.84	19.61	42000	74.20	13.84	13
	1/2" Plate	Bearing	2264	35000	15.46	4.15	42000	18.55	2.71	13
		Shear Tearout	566	20195	35.68	10.89	24234	42.82	7.56	13
	Plate/Channel	Bending	142	17000	119.72	38.91	24000	169.01	32.80	14
	1/4" Fillet Welds	Shear	71	9809	138.15	45.05	13848	195.04	38.01	14
	Channel Section	Bending	450	35000	77.78	24.93	42000	93.33	17.67	14
		Torsion	200	20195	100.98	32.66	24234	121.17	23.23	14
	Top Plate	Bending	5760	35000	6.08	5.08	42000	7.29	6.29	14
	Channel/Top Plat 1/4" Fillet Welds	Combined	314	17000	54.14	53.14	24000	76.43	75.43	15
Building 23 Mag/Cal Facility Hoist System Center Support	5/16" SS Bolt	Double Shear	6650	25965	3.90	0.30	43275	6.51	0.30	17
	Pulley Housing	Tensile	19466	45000	2.31	-0.23	75000	3.85	-0.23	17
	5/16" Swivel Bolt	Thread Shear	8650	25965	3.00	0.00	43275	5.00	0.00	17
	1/2" Plate	Bearing	8160	35000	4.29	0.43	42000	5.15	0.03	17
		Shear Tearout	2040	20195	9.90	2.30	24234	11.88	1.38	17
	Plate/Channel	Bending	707	17000	24.05	7.02	24000	33.95	5.79	18
	1/4" Fillet Welds	Shear	71	9809	138.15	45.05	13848	195.04	38.01	18
	Channel Section	Bending	2250	35000	15.56	4.19	42000	18.67	2.73	18
		Torsion	200	20195	100.98	32.66	24234	121.17	23.23	18
	Top Plate	Bending	7200	35000	4.86	0.62	42000	5.83	0.17	18
	Channel/Top Plat 1/4" Fillet Welds	Combined	949	17000	17.91	4.97	24000	25.29	4.06	19
Floor/Wall	Winch/Drum	Tangential	12800	60000	4.69	0.56	100000	7.81	0.56	20

CMAA 74-3 STRUCTURAL DESIGN - BLDG M16 SPANCO CRANE GANTRY

3.3.2.1.1.1 Dead Load (**DL**)

DL = Weight of Monorail = 12.5 lb/ft x 10'

= (12.5)(10) = 125 lb

3.3.2.1.1.2 Trolley Load (**TL**)

TL = Weight of Trolley = 236 lb

3.3.2.1.1.3 Lifted Load (**LL**)

LL = Max. Mounted Load = 2000 lb rated

Summation of Vertical Load (**VL**)

VL = **DL** + **TL** + **LL** = 2361 lb (beam & truss analysis)

VL = **TL** + **LL** = 2236 lb (local flange & web analysis)

3.3.2.1.1.4.1 Dead Load Factor (**DLF**)

DLF = 1.2 (200 fpm conservative)

3.3.2.1.1.4.2 Hoist Load Factor (**HLF**)

HLF = 0.5 (maximum, conservative)

3.3.2.1.1.5 Inertia Forces from Drives (**IFD**)

IFD = 0.025(2361) = 59 lb (beam & truss analysis)

IFD = 0.025(2236) = 56 lb (flange & web analysis)

3.3.2.1.2.2 Forces due to Skewing (**SK**)

SK = 0.15(2361) = 354 lb (beam & truss analysis)

SK = 0.15(2236) = 335 lb (flange & web analysis)

3.3.2.3 Load Combination

3.3.2.3.2 **Case 2:** Crane in Regular Use

P = (DL + TL)DLF + LL(1 + HLF) + IFD + SK

P = (125 + 236)(1.2) + (2000)(1+0.5) + 59 + 354

= 3846 lb (beam & truss analysis)

P = (236)(1.2) + (2000)(1.5) + 56 + 335

= 3674 lb (flange & web analysis) **Total Load**

3.3.2.4 Local Bending of Flanges due to Wheel Loads

Monorail Section: S 6 x 12.5

Reference: Fig. 3.3.2.4-2

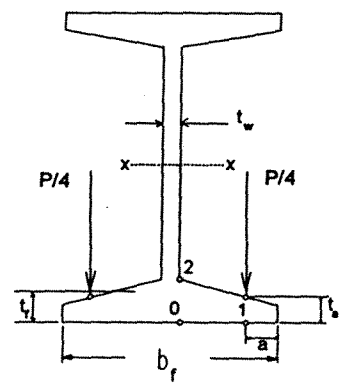

$A = 3.67\ \text{in}^2$ $\quad I_{xx} = 22.1\ \text{in}^4$

$d = 6.0\ \text{in}$ $\quad S_{xx} = 7.37\ \text{in}^3$

$t_w = 0.232\ \text{in}$ $\quad r_x = 2.45\ \text{in}$

$b_f = 3.332\ \text{in}$ $\quad I_{yy} = 1.82\ \text{in}^4$

$t_f = 0.359\ \text{in}$ $\quad S_{yy} = 1.09\ \text{in}^4$

$J = 0.17\ \text{in}^4$ $\quad r_y = 0.705\ \text{in}$

$$\lambda = \frac{2a}{b_f - t_w} = \frac{2(0.55)}{3.332 - 0.232} = 0.355$$

$$C_{x0} = -1.096 + 1.095\lambda + 0.192e^{-6.0\lambda} = -1.096 + 0.389 + 0.023 = -0.684$$

$$C_{x1} = 3.965 - 4.835\lambda - 3.965e^{-2.675\lambda} = 3.965 - 1.716 - 1.535 = 0.714$$

$$C_{y0} = -0.981 - 1.479\lambda + 1.12e^{1.322\lambda} = -0.981 - 0.525 + 1.790 = 0.284$$

$$C_{y1} = 1.810 - 1.150\lambda + 1.060e^{-7.70\lambda} = 1.810 - 0.408 + 0.069 = 1.471$$

$$t_a = t_f - \frac{b_f}{24} + \frac{a}{6} = 0.359 - \frac{3.332}{24} + \frac{0.55}{6} = 0.312$$

<u>Stress Calculations</u>

$$\sigma_{x0} = C_{x0}\frac{P/4}{t_a^2} = (-0.684)\left[\frac{919}{0.312^2}\right] = -6457\ \text{psi} \qquad \sigma_{y0} = C_{y0}\frac{P/4}{t_a^2} = (0.284)\left[\frac{919}{0.312^2}\right] = 2681\ \text{psi}$$

$$\sigma_{x1} = C_{x1}\frac{P/4}{t_a^2} = (0.714)\left[\frac{919}{0.312^2}\right] = 6741\ \text{psi} \qquad \sigma_{y1} = C_{y1}\frac{P/4}{t_a^2} = (1.471)\left[\frac{919}{0.312^2}\right] = 13888\ \text{psi}$$

$$\sigma_t = \sqrt{\sigma_x^2 + \sigma_y^2 - \sigma_x\sigma_y + 3\tau_{xy}^2} = \sqrt{(-6457)^2 + (2681)^2 - (-6457)(2681) + 3(0)^2} = 8136\ \text{psi} \quad \text{(Point 0)}$$

$$\sigma_t = \sqrt{\sigma_x^2 + \sigma_y^2 - \sigma_x\sigma_y + 3\tau_{xy}^2} = \sqrt{(6741)^2 + (13888)^2 - (6741)(13888) + 3(0)^2} = 12029\ \text{psi} \quad \text{(Point 1)}$$

Safety Factors, $\sigma_{uts} = 58000 psi$

$(F.S.) = 58000/8136 = 7.13$ (rated) --- Point 0

$(F.S.) = 58000/12029 = 4.82$ (rated) --- Point 1

Beam & Truss Analysis

Reference:

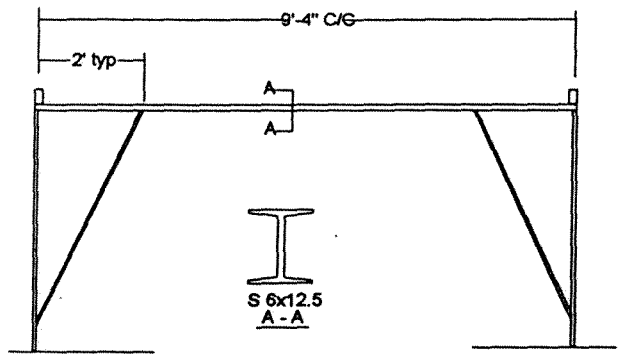

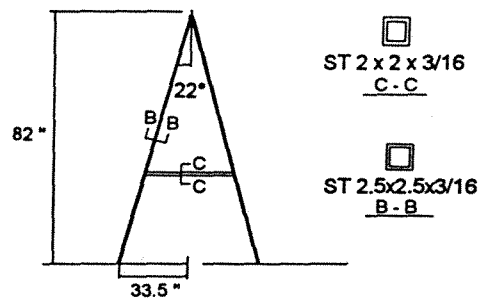

Beam Analysis - Bending Stress

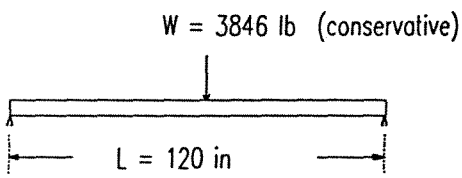

$$\sigma = \frac{M}{S} = \frac{WL/4}{S} = \frac{3846(120)/4}{(7.37)} = 15655 \text{ psi}$$

$$\text{F.S.} = \frac{\sigma_{uts}}{\sigma} = \frac{58000}{15655} = 3.70 \text{ rated}$$

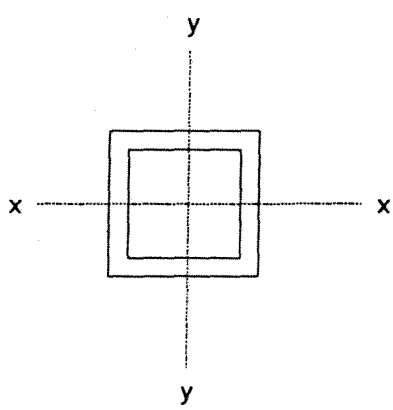

ST 2.5x2.5x3/16

Properties of $2\frac{1}{2} x 2\frac{1}{2} x \frac{3}{16}$ Structural Tubing:

$A = 1.64 \text{ in}^2$

$I_{xx} = I_{yy} = 1.42 \text{ in}^4$

$S_{xx} = S_{yy} = 1.64 \text{ in}^2$

$J = 2.38 \text{ in}^4$

Truss Analysis

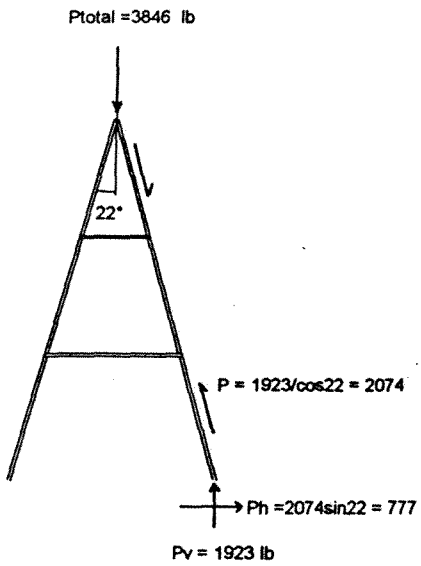

Buckling Consideration:

$$p_{cr} = \pi^2 \, EI/L^2 = \pi^2 (30E^6)(1.42)/(\frac{82}{\cos 22})^2 = 54923 \text{ lb}$$

$$\text{F.S.} = 54923/2074 = 26.5 \text{ rated}$$

Axial Stress in Truss Column:

$$\sigma_{comp} = \frac{P}{A} = \frac{2074}{1.64} = 1265 \text{ psi}$$

$$\text{F.S.} = \frac{\sigma_{uts}}{\sigma} = \frac{70000}{1265} = 55.3 \text{ rated}$$

Axial Stress in Horizontal Brace

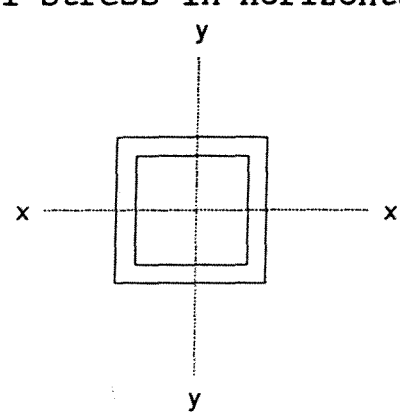

ST 2 x 2 x 3/16

Properties of $2 \; x \; 2 \; x \; \frac{3}{16}$ Structural Tubing:

$$A = 1.27 \text{ in}^2$$

$$I_{xx} = I_{yy} = 0.668 \text{ in}^4$$

$$S_{xx} = S_{yy} = 0.668 \text{ in}^2$$

$$J = 1.15 \text{ in}^4$$

$$\sigma = \frac{P}{A} = \frac{777}{1.27} = 612 \text{ psi} \qquad F.S. = \frac{\sigma_{uts}}{\sigma} = \frac{70000}{612} = 114.4$$

Mag/Cal Facility Hoist

Corner Cable/Pulley Support:

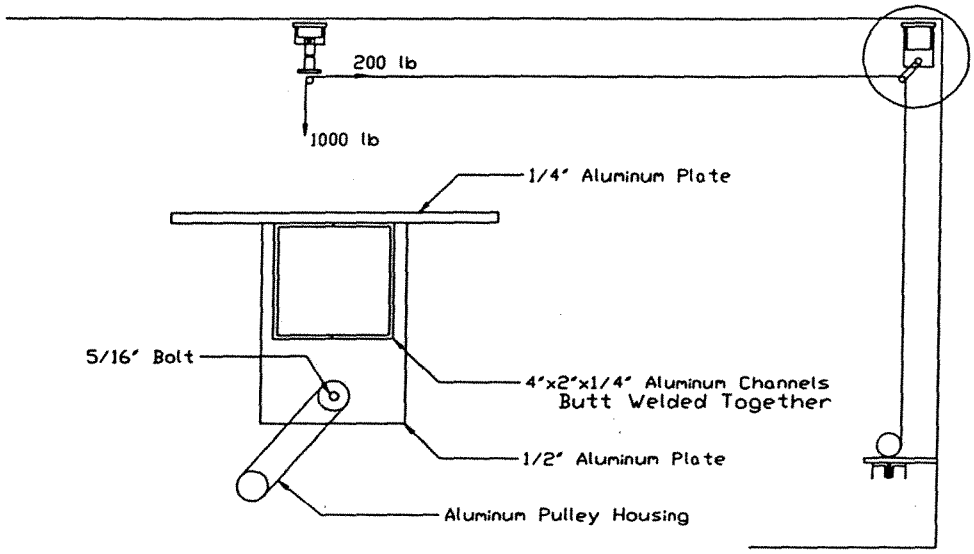

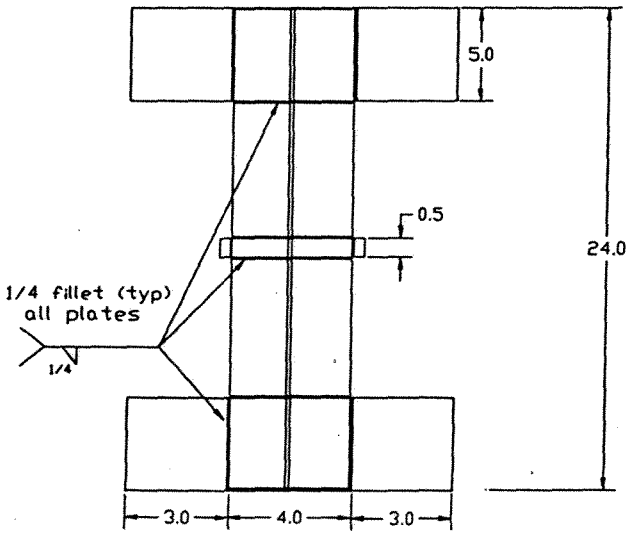

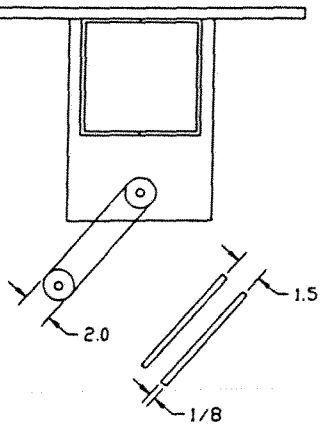

Double Shear - 5/16" Stainless Steel Bolt

For SS Bolts, Min Tensile Strength = 75000 psi

Load on Bolt $P = \frac{200}{0.707} = 283 \text{ lb}$

τ (Double Shear, Shank) $= \frac{P}{2A_s} = \frac{4(283)}{2\pi(\frac{5}{16})^2} = 1775 \text{ psi}$

$F.S. = \frac{\tau_{uts}}{\tau} = \frac{0.577(75000)}{1775} = 24.4$

Tensile Stress - Pulley Housing

$\sigma = \frac{P}{A} = \frac{283}{2(2)(0.125)} = 566 \text{ psi}$

$F.S. = \frac{\sigma_{uts}}{\sigma} = \frac{42000}{566} = 74.2$

Bearing Stress - 1/2" Plate

$\sigma_b = \frac{P}{A_b} = \frac{283}{(0.25)(0.5)} = 2264 \text{ psi}$

$F.S. = \frac{\sigma_{uts}}{\sigma} = \frac{42000}{2264} = 18.55$

Shear Tearout

$\tau = \frac{P}{A_t} = \frac{283}{(1.0)(0.5)} = 566 \text{ psi}$

$F.S. = \frac{\tau_{uts}}{\tau} = \frac{0.577(42000)}{566} = 42.8$

Bending and Shear Stress - Plate/Channel Fillet Welds

Reference: Blodgett, Design of Welded Structures, Section 7.4-8, Table 5

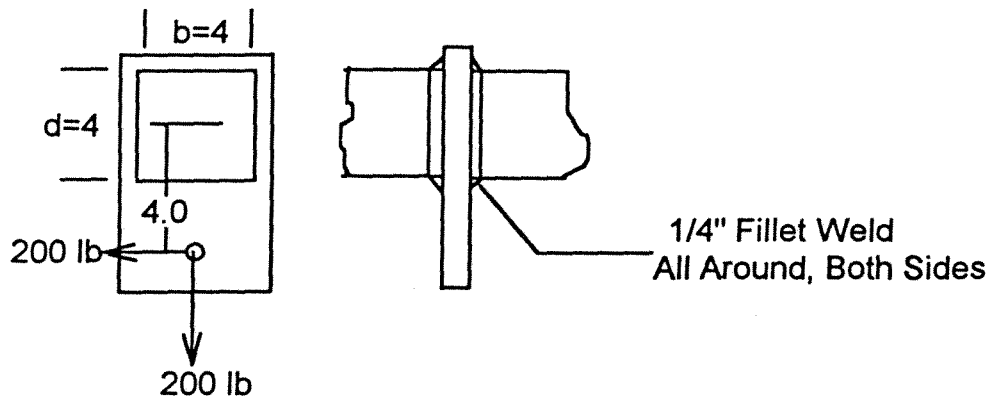

$$\sigma = \frac{M}{S_w} = \frac{200(4.0)}{2(4.0)(4.0)(0.707)(0.25)} = 142 \text{ psi}$$

$$F.S. = \frac{\sigma_{uts}}{\sigma} = \frac{24000}{142} = 169.0$$

$$\tau = \frac{P}{A_w} = \frac{200}{4(4.0)(0.707)(0.25)} = 71 \text{ psi}$$

$$F.S. = \frac{\tau_{uts}}{\tau} = \frac{0.577(24000)}{71} = 195.0$$

Bending and Torsion Stress - Channel Sections

Reference: Blodgett, Design of Welded Structures, Section 2.2-8, Table 2

Assume simply supported beam, center load for conservatism: (L=24")

$$\sigma = \frac{M}{S} = \frac{3PL}{4td(3b+d)}$$

$$= \frac{3(200)(24.0)}{4(0.125)(4.0)(12.0+4.0)} = 450 \text{ psi}$$

$$F.S. = \frac{\sigma_{uts}}{\sigma} = \frac{42000}{450} = 93.3$$

$$\tau = \frac{Tc}{R} = \frac{Tc(b+d)}{2tb^2d^2}$$

$$= \frac{200(4.0)(2.0)(4.0+4.0)}{2(0.125)(4.0)^2(4.0)^2} = 200 \text{ psi}$$

$$F.S. = \frac{\tau_{uts}}{\tau} = \frac{0.577(42000)}{200} = 121.2$$

Bending - Top Plate

Assume fixed-fixed beam, center load to determine end moment: (L=24")

$$\sigma_b = \frac{M}{S_p} = \frac{6PL}{8bt_p^{\,2}} \frac{6(200)(24.0)}{8(10.0)(0.25)^2} = 5760 \text{ psi}$$

$$F.S. = \frac{\sigma_{uts}}{\sigma} = \frac{42000}{5760} = 7.29$$

Bending and Shear Stress - Channel/Top Plate Fillet Welds

Reference: Blodgett, Design of Welded Structures, Section 7.4-8, Table 5

Assume fixed-fixed beam, center load to determine end moment: (L=24")

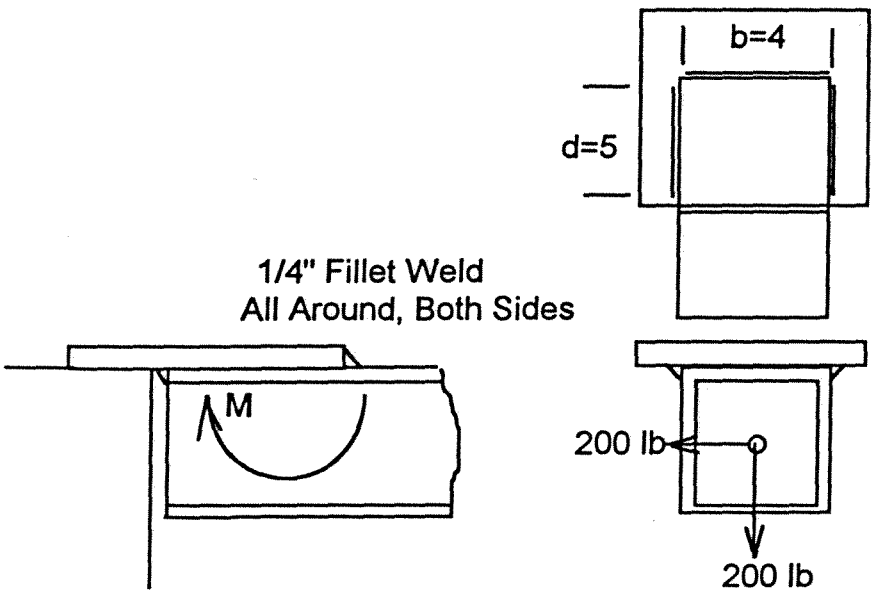

Axial Stress:

$$\sigma = \frac{P}{A_w} = \frac{P}{2(b+d)t_w}$$

$$= \frac{200}{2(4.0+5.0)(0.707)(0.25)} = 63 \text{ psi}$$

Bending Stress:

$$\sigma = \frac{M}{S_w} = \frac{PL}{8(bd + \frac{d^2}{3})t_w}$$

$$= \frac{200(24.0)}{8\{(4.0)(5.0) + \frac{(5.0)^2}{3}\}(0.707)(0.25)} = 120 \text{ psi}$$

Combined Stress:

$$\sigma_{comb} = \sqrt{\sigma^2 + 3\tau^2} = \sqrt{(63+120)^2 + 3(147)^2} = 314 \text{ psi}$$

$$F.S. = \frac{\sigma_{uts}}{\sigma} = \frac{24000}{314} = 76.4$$

Direct Shear Stress:

$$\tau = \frac{P}{A_s} = \frac{200}{2(4.0)(0.707)(0.25)} = 142 \text{ psi}$$

Torsional Stress:

$$\tau = \frac{Tc}{J_w} = \frac{6PLc}{8(b+d)^3} = \frac{6(200)(24.0)}{8(4.0+5.0)^3} = 5 \text{ psi}$$

Total Shear Stress

$$\tau_{total} = \tau_d + \tau_t = 142 + 5 = 147 \text{ psi}$$

Mag/Cal Facility Hoist

Central Hoist Cable/Pulley Support:

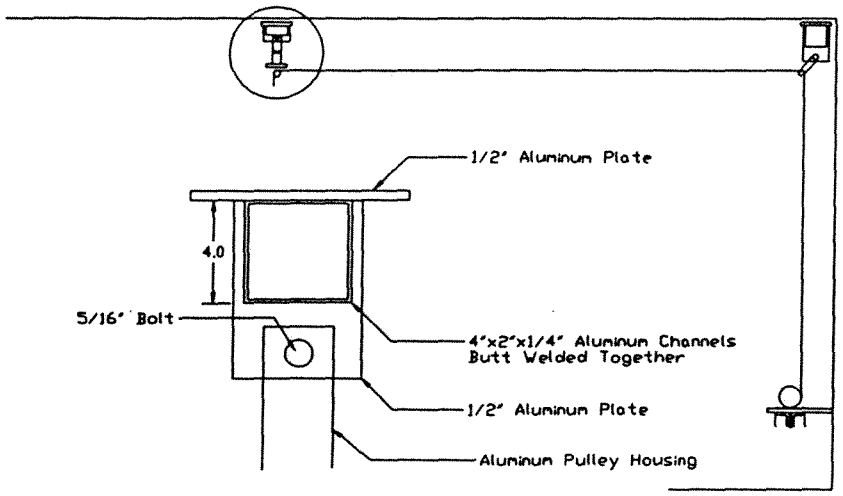

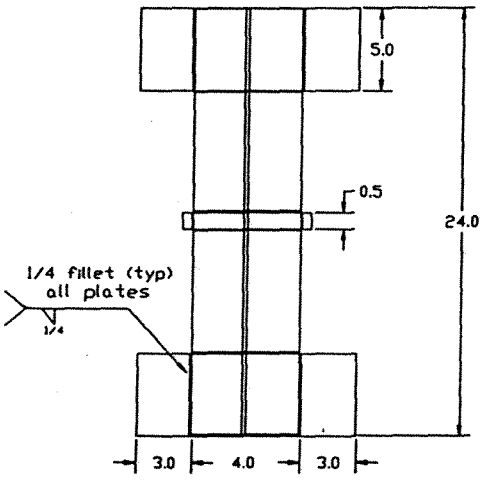

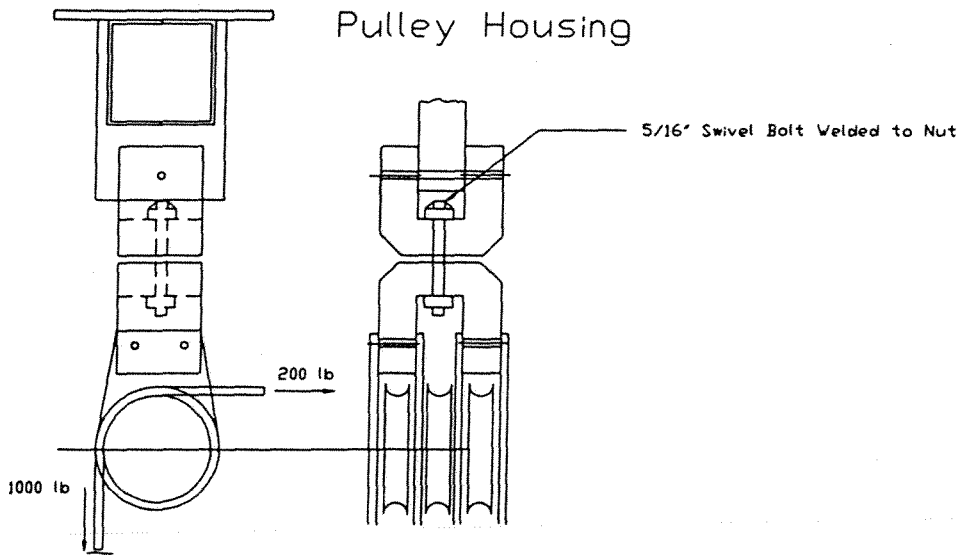

Double Shear - 5/16" Stainless Steel Bolt

For SS Bolts, Min Tensile Strength = 75000 psi

Load on Bolt $P = \sqrt{(1000)^2 + (200)^2} = 1020 \text{ lb}$

$$\tau \text{ (Double Shear, Shank)} = \frac{P}{2A_s} = \frac{4(1020)}{2\pi(\frac{5}{16})^2} = 6650 \text{ psi}$$

$$F.S. = \frac{\tau_{uts}}{\tau} = \frac{0.577(75000)}{6650} = 6.51$$

Tensile Stress - Pulley Housing 5/16" Swivel Bolt

$P_t = 1020 \text{ lb}$

$$\sigma = \frac{P}{A_t} = \frac{1020}{0.0524} = 19466 \text{ psi}$$

$$F.S. = \frac{\sigma_{uts}}{\sigma} = \frac{75000}{19466} = 3.85$$

Thread Stress - Pulley Housing 5/16" Swivel Bolt

$$\tau = \frac{2P}{\pi d_m L_e} = \frac{2P}{2\pi\sqrt{\frac{A_m}{\pi}}L_e} = \frac{(1020)}{\pi\sqrt{\frac{0.0454}{\pi}}(\frac{5}{16})} = 8650 \text{ psi}$$

$$F.S. = \frac{\sigma_{uts}}{\sigma} = \frac{0.577(75000)}{8650} = 5.00$$

Bearing Stress - 1/2" Plate

$$\sigma_b = \frac{P}{A_b} = \frac{1020}{(0.25)(0.5)} = 8160 \text{ psi}$$

$$F.S. = \frac{\sigma_{uts}}{\sigma} = \frac{42000}{8160} = 5.15$$

Shear Tearout

$$\tau = \frac{P}{A_t} = \frac{1020}{(1.0)(0.5)} = 2040 \text{ psi}$$

$$F.S. = \frac{\tau_{uts}}{\tau} = \frac{0.577(42000)}{2040} = 11.88$$

Bending and Shear Stress - Plate/Channel Fillet Welds

Reference: Blodgett, Design of Welded Structures, Section 7.4-8, Table

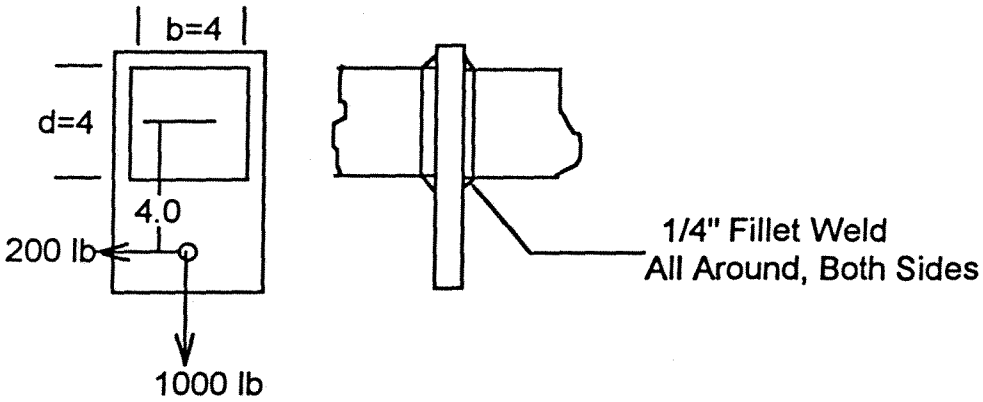

$$\sigma = \frac{M}{S_w} = \frac{1000(4.0)}{2(4.0)(4.0)(0.707)(0.25)} = 707 \text{ psi}$$

$$F.S. = \frac{\sigma_{uts}}{\sigma} = \frac{24000}{707} = 33.95$$

$$\tau = \frac{P}{A_w} = \frac{200}{4(4.0)(0.707)(0.25)} = 71 \text{ psi}$$

$$F.S. = \frac{\tau_{uts}}{\tau} = \frac{0.577(24000)}{71} = 195.0$$

Bending and Torsion Stress - Channel Sections

Reference: Blodgett, Design of Welded Structures, Section 2.2-8, Table 2

Assume simply supported beam, center load for conservatism: (L=24")

$$\sigma = \frac{M}{S} = \frac{3PL}{4td(3b+d)}$$

$$= \frac{3(1000)(24.0)}{4(0.125)(4.0)(12.0+4.0)} = 2250 \text{ psi}$$

$$F.S. = \frac{\sigma_{uts}}{\sigma} = \frac{42000}{2250} = 18.67$$

$$\tau = \frac{Tc}{R} = \frac{Tc(b+d)}{2tb^2d^2}$$

$$= \frac{200(4.0)(2.0)(4.0+4.0)}{2(0.125)(4.0)^2(4.0)^2} = 200 \text{ psi}$$

$$F.S. = \frac{\tau_{uts}}{\tau} = \frac{0.577(42000)}{200} = 121.2$$

Bending - Top Plate

Assume fixed-fixed beam, center load to determine end moment: (L=24")

$$\sigma_b = \frac{M}{S_p} = \frac{6PL}{8bt_p^2} \frac{6(1000)(24.0)}{8(10.0)(0.5)^2} = 7200 \text{ psi}$$

$$F.S. = \frac{\sigma_{uts}}{\sigma} = \frac{42000}{7200} = 5.83.$$

Bending and Shear Stress - Channel/Top Plate Fillet Welds

Reference: Blodgett, Design of Welded Structures, Section 7.4-8, Table

Assume fixed-fixed beam, center load to determine end moment: (L=24")

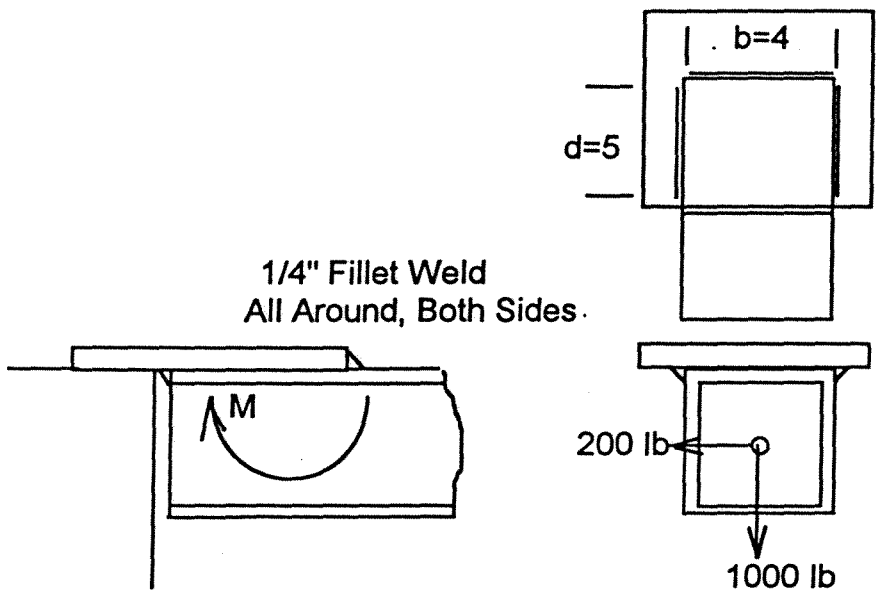

Axial Stress:

$$\sigma = \frac{P}{A_w} = \frac{P}{2(b+d)t_w}$$

$$= \frac{1000}{2(4.0+5.0)(0.707)(0.25)} = 314 \text{ psi}$$

Bending Stress:

$$\sigma = \frac{M}{S_w} = \frac{PL}{8(bd + \frac{d^2}{3})t_w}$$

$$= \frac{1000(24.0)}{8\{(4.0)(5.0) + \frac{(5.0)^2}{3}\}(0.707)(0.25)} = 600 \text{ psi}$$

Combined Stress:

$$\sigma_{comb} = \sqrt{\sigma^2 + 3\tau^2} = \sqrt{(314+600)^2 + 3(147)^2} = 949 \text{ psi}$$

$$F.S. = \frac{\sigma_{uts}}{\sigma} = \frac{24000}{949} = 25.3$$

Direct Shear Stress:

$$\tau = \frac{P}{A_s} = \frac{200}{2(4.0)(0.707)(0.25)} = 142 \text{ psi}$$

Torsional Stress:

$$\tau = \frac{Tc}{J_w} = \frac{6PLc}{8(b+d)^3} = \frac{6(200)(24.0)}{8(4.0+5.0)^3} = 5 \text{ psi}$$

Total Shear Stress:

$$\tau_{total} = \tau_d + \tau_t = 142 + 5 = 147 \text{ psi}$$

Mag-Cal Facility Winch/Drum

Properties of Drum:

Diameter = 2.5" OD
Thickness = 0.25"
Width = 4'
Material = Stainless Steel
Hardness = Slightly less than RC20
Poisson's Ratio = 0.3
Check Fleet Angle to Scheave:

Drum Width = 4", Half Width = 2"

Length to Scheave = 20 ft = 240 "

Fleet Angle $\theta = \arctan\frac{2}{240} = 0.5^o \le 1.5^o$ good

Check Load Capacity of Drum:

Reference, Machinery's Handbook, 17th Edition, Industrial Press, Pg. 462:

Radial Pressure $p = \frac{2P}{Dd} = \frac{2(200)}{(2.5)(0.25)} = 640$ psi

Tangential Stress in Drum:

$$\sigma = \frac{pD}{2dt} = \frac{640(2.5)}{2(0.25)(0.25)} = 12800 \text{ psi} \qquad F.S. = \frac{\sigma_{uts}}{\sigma} = \frac{100000}{12800} = 7.81$$

Critical Buckling Pressure of Drum:

Reference: Roark & Young, Formulas for Stress & Strain, 6th Edition, Table 35 Case 19b:

$$q' = 0.807\frac{Et^2}{lr^2}\sqrt[4]{\left(\frac{1}{1-\mu^2}\right)^3\frac{t^2}{r^2}} = 0.807\frac{(30x10^6)(0.25)^2}{4(1.25)^2}\sqrt[4]{\left(\frac{1}{1-0.3^2}\right)^3\frac{(0.25)^2}{(1.25)^2}} = 116206 \text{ psi}$$

Note: This formulation applies to thin walled vessels defined by r/t of 10 or greater. Actual r/t = 1.25/0.25 = 5; Classified as a thick-walled vess Therefore critical buckling is actually higher than calculated. Also, stre gradient exists from inside to outside, but maximum thick-walled cylinder stress is lower than that predicted by thin-walled method.
Conclusion: Drum is good for 200 lbs.

CMAA 74-3 STRUCTURAL DESIGN - DOWNS 12323 GANTRY

3.3.2.1.1.1 Dead Load (**DL**)

DL = Weight of Monorail = 18.4 lb/ft x 10'

= (18.4)(10) = 184 lb

3.3.2.1.1.2 Trolley Load (**TL**)

TL = Weight of Trolley = 256 lb

3.3.2.1.1.3 Lifted Load (**LL**)

LL = Max. Mounted Load = 2000 lb rated

Summation of Vertical Load (**VL**)

VL = DL + TL + LL = 2440 lb (beam & truss analysis)

VL = TL + LL = 2256 lb (local flange & web analysis)

3.3.2.1.1.4.1 Dead Load Factor (**DLF**)

DLF = 1.2 (200 fpm conservative)

3.3.2.1.1.4.2 Hoist Load Factor (**HLF**)

HLF = 0.5 (maximum, conservative)

3.3.2.1.1.5 Inertia Forces from Drives (**IFD**)

IFD = 0.025(2440) = 61 lb (beam & truss analysis)

IFD = 0.025(2256) = 56 lb (flange & web analysis)

3.3.2.1.2.2 Forces due to Skewing (**SK**)

SK = 0.15(2440) = 366 lb (beam & truss analysis)

SK = 0.15(2256) = 338 lb (flange & web analysis)

3.3.2.3 Load Combination

3.3.2.3.2 **Case 2:** Crane in Regular Use

P = (DL + TL)DLF + LL(1 + HLF) + IFD + SK

P = (184 + 256)(1.2) + (2000)(1+0.5) + 61 + 366

= 3955 lb (beam & truss analysis)

P = (256)(1.2) + (2000)(1.5) + 56 + 338

= 3701 lb (flange & web analysis) **Total Load**

3.3.2.4 Local Bending of Flanges due to Wheel Loads

Monorail Section: S 8 x 18.4

Reference: Fig. 3.3.2.4-2

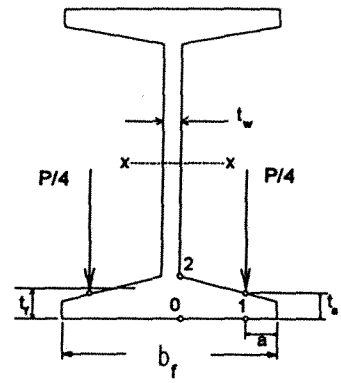

$A = 5.41 \text{ in}^2$ $\quad I_{xx} = 57.6 \text{ in}^4$

$d = 8.0 \text{ in}$ $\quad S_{xx} = 14.4 \text{ in}^3$

$t_w = 0.271 \text{ in}$ $\quad r_x = 3.26 \text{ in}$

$b_f = 4.001 \text{ in}$ $\quad I_{yy} = 3.73 \text{ in}^4$

$t_f = 0.426 \text{ in}$ $\quad S_{yy} = 1.86 \text{ in}^4$

$J = 0.34 \text{ in}^4$ $\quad r_y = 0.831 \text{ in}$

$$\lambda = \frac{2a}{b_f - t_w} = \frac{2(0.67)}{4.001 - 0.271} = 0.359$$

$$C_{x0} = -1.096 + 1.095\lambda + 0.192e^{-6.0\lambda} = -1.096 + 0.393 + 0.022 = -0.681$$

$$C_{x1} = 3.965 - 4.835\lambda - 3.965e^{-2.675\lambda} = 3.965 - 1.737 - 1.517 = 0.711$$

$$C_{y0} = -0.981 - 1.479\lambda + 1.12e^{1.322\lambda} = -0.981 - 0.531 + 1.801 = 0.289$$

$$C_{y1} = 1.810 - 1.150\lambda + 1.060e^{-7.70\lambda} = 1.810 - 0.413 + 0.067 = 1.464$$

$$t_a = t_f - \frac{b_f}{24} + \frac{a}{6} = 0.426 - \frac{4.001}{24} + \frac{0.67}{6} = 0.371$$

Stress Calculations

$$\sigma_{x0} = C_{x0}\frac{P/4}{t_a^2} = (-0.681)\left[\frac{925}{0.371^2}\right] = -4577 \text{ psi} \qquad \sigma_{y0} = C_{y0}\frac{P/4}{t_a^2} = (0.289)\left[\frac{925}{0.371^2}\right] = 1942 \text{ psi}$$

$$\sigma_{x1} = C_{x1}\frac{P/4}{t_a^2} = (0.711)\left[\frac{925}{0.371^2}\right] = 4778 \text{ psi} \qquad \sigma_{y1} = C_{y1}\frac{P/4}{t_a^2} = (1.464)\left[\frac{925}{0.371^2}\right] = 9839 \text{ psi}$$

$$\sigma_t = \sqrt{\sigma_x^2 + \sigma_y^2 - \sigma_x\sigma_y + 3\tau_{xy}^2} = \sqrt{(-4577)^2 + (1942)^2 - (-4577)(1942) + 3(0)^2} = 5797 \text{ psi} \quad \text{(Point 0)}$$

$$\sigma_t = \sqrt{\sigma_x^2 + \sigma_y^2 - \sigma_x\sigma_y + 3\tau_{xy}^2} = \sqrt{(4778)^2 + (9839)^2 - (4778)(9839) + 3(0)^2} = 8522 \text{ psi} \quad \text{(Point 1)}$$

Safety Factors, $\sigma_{uts} = 58000 psi$

$(F.S.) = 58000/5797 = 10.0$ (rated) --- Point 0

$(F.S.) = 58000/8522 = 6.81$ (rated) --- Point 1

Beam & Truss Analysis

Reference:

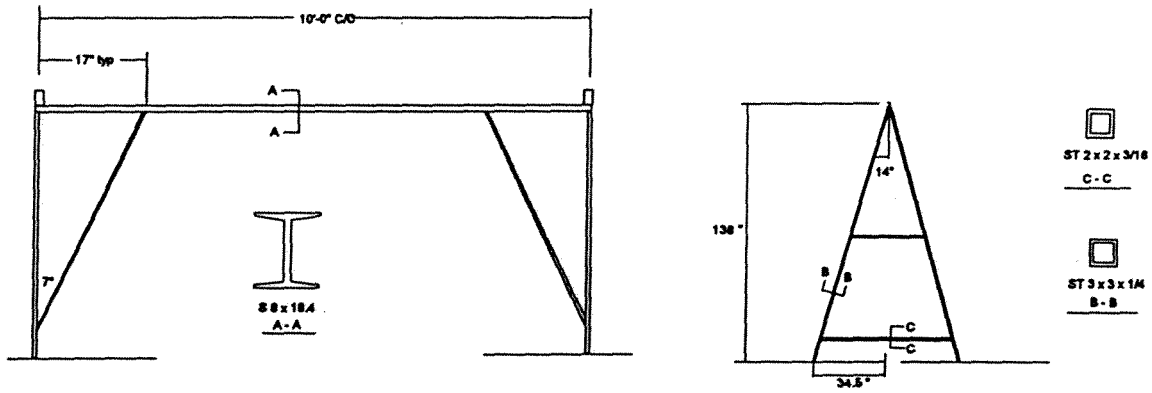

Beam Analysis - Bending Stress

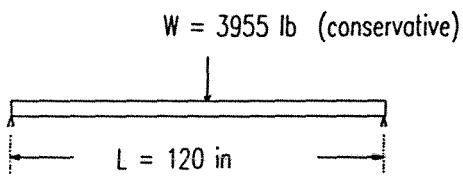

$$\sigma = \frac{M}{S} = \frac{WL/4}{S} = \frac{3955(120)/4}{(14.4)} = 8240 \text{ psi}$$

$$\text{F.S.} = \frac{\sigma_{uts}}{\sigma} = \frac{58000}{8240} = 7.04 \text{ rated}$$

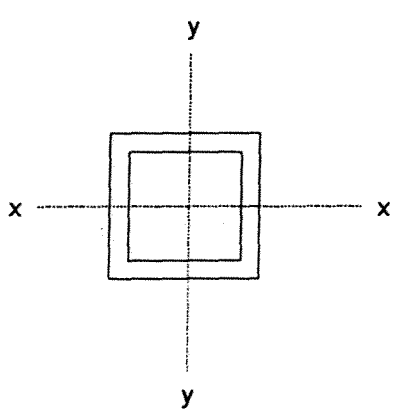

ST 3 x 3 x 1/4

Properties of $3 \times 3 \times \frac{1}{4}$ Structural Tubing:

$A = 2.59 \text{ in}^2$

$I_{xx} = I_{yy} = 3.16 \text{ in}^4$

$S_{xx} = S_{yy} = 2.10 \text{ in}^2$

$J = 5.35 \text{ in}^4$

Truss Analysis

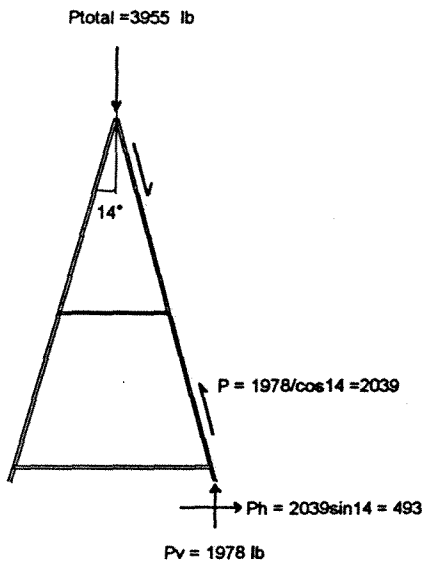

Buckling Consideration:

$$p_{cr} = \pi^2 EI/L^2 = \pi^2 (30x10^6)(3.16)/(\frac{138}{\cos 14})^2 = 46271 \text{ lb}$$

F.S. = 46271/2039 = 22.7 rated

Axial Stress in Truss Column:

$$\sigma_{comp} = \frac{P}{A} = \frac{2039}{2.59} = 787 \text{ psi}$$

$$\text{F.S.} = \frac{\sigma_{uts}}{\sigma} = \frac{70000}{787} = 88.9 \text{ rated}$$

Axial Stress in Horizontal Brace

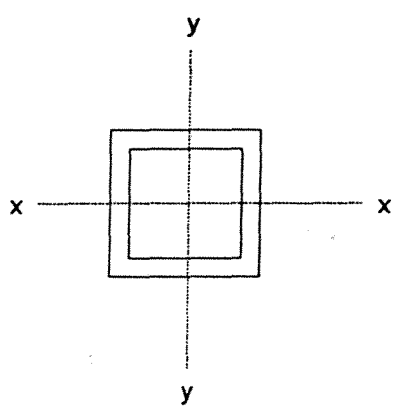

ST 2 x 2 x 3/16

Properties of 2 x 2 x $\frac{3}{16}$ Structural Tubing:

$A = 1.27 \text{ in}^2$

$I_{xx} = I_{yy} = 0.668 \text{ in}^4$

$S_{xx} = S_{yy} = 0.668 \text{ in}^2$

$J = 1.15 \text{ in}^4$

$$\sigma = \frac{P}{A} = \frac{493}{1.27} = 388 \text{ psi} \qquad F.S. = \frac{\sigma_{uts}}{\sigma} = \frac{70000}{388} = 180.4$$

1/2" Grade 5 Bolts, Beam to Top Support Plates:

Assume fixed-fixed beam for bolt analysis

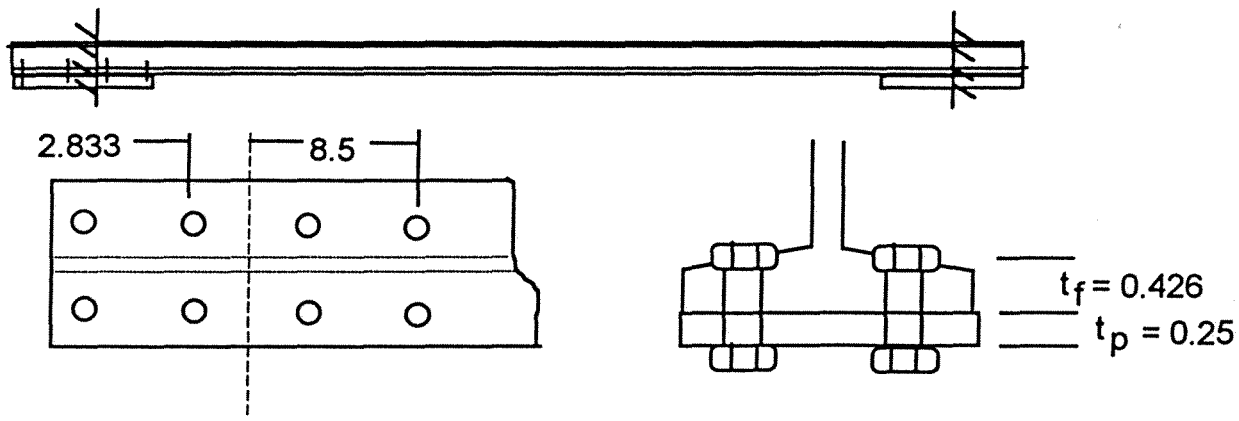

$$P_{bolt} = \frac{Mr_0}{\sum r_n^2} = \frac{WLr_0}{8(4r_0^2 + 4r_i^2)} = \frac{3995(120)(8.5)}{8[4(8.5)^2 + 4(2.833^2)]} = 1586 \text{ lb}$$

Bolt Preload Calculations

INPUT

1. Description:	Downs 12323 Gantry Crane - 1/2" Beam Bolts				
2. Preload, Torque:	25.00	ft-lb	10. Grip:		0.6760
3. σ-yield, bolt:	120000.00	psi	11. External load:		1586.00
4. E, bolt:	3.0E+07	psi	12. Shear load:		0.00
5. E, frame:	3.0E+07	psi	13. Stress angle:		30.00
6. Diameter, bolt:	0.5000	in	14. σ-yield, nut:		92000.00
7. No. threads/in:	13.00		15. Engagement length:		0.50
8. Diameter, hole:	0.5300	in	16. Torque coefficient:		0.20
9. OD, washer:	1.0000	in	17. Thd. shear factor:		0.75

OUTPUT

Fo-Ft	=	270	Fi	=	3000.00 lb	As =	0.1419	in²
σ (Bolt)	=	22723 psi	Ft-Fi	=	224 lb	Dp =	0.4500	in
τ (Bolt)	=	0 psi	Ft	=	3224 lb	kb =	6.3E+06	lb/in
σ-comb	=	22723 psi	Fo	=	3494 lb	kf =	3.8E+07	lb/in
FS (Bolt)	=	5.28						
τ, (Thd)	=	6077 psi	Torque	=	300.0 in-lb	% σ-yld =	17.62	%
FS,(Thd)	=	9.08		=	25.0 ft-lb			

Douns 12323 Gantry Crane - 1/2" Beam Bolts

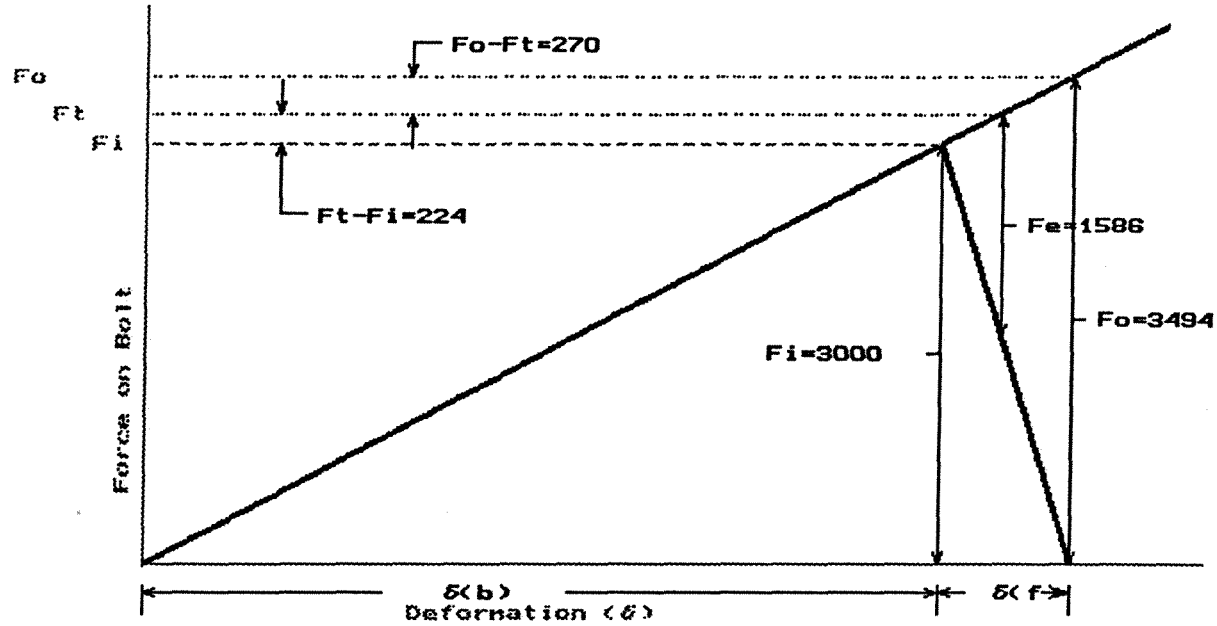

1/4" Fillet Weld, Top Plate to Truss Tubes

Reference, Blodgett, Section 7.4-7, Table 5, Properties of Weld

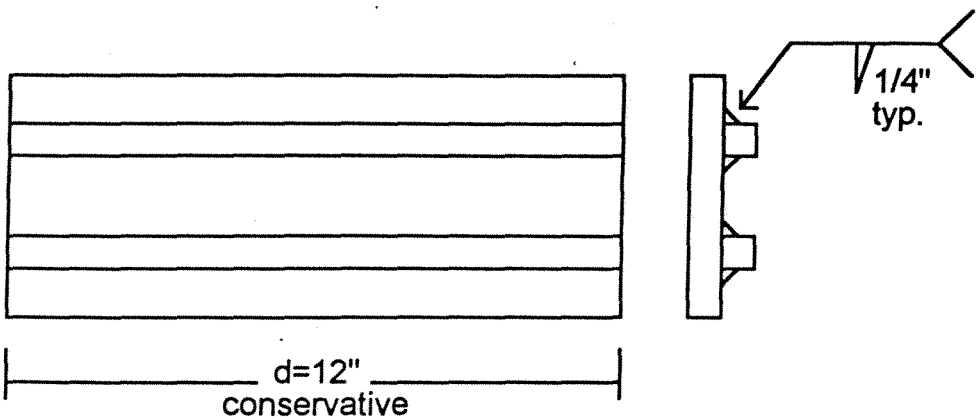

Moment $M = 59325$ inlb

Section Modulus of Weld $S = \frac{2d^3}{3}(t_{eff}) = \frac{2(12)^3}{3}(0.707)(0.25) = 16.97 \text{ in}^3$

$\sigma = \frac{M}{S} = \frac{59325}{16.97} = 3496 \text{ psi}; \quad F.S. = \frac{\sigma_{ult}}{\sigma} = \frac{58000}{3496} = 16.6$

APPENDIX A - Mag/Cal Facility Hoist - 1250 lb proof load

Corner Cable/Pulley Support:

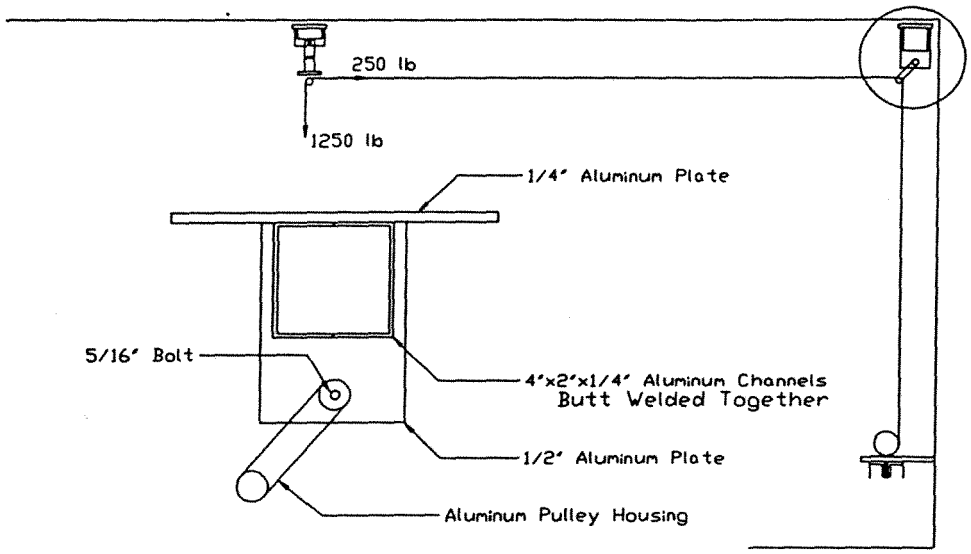

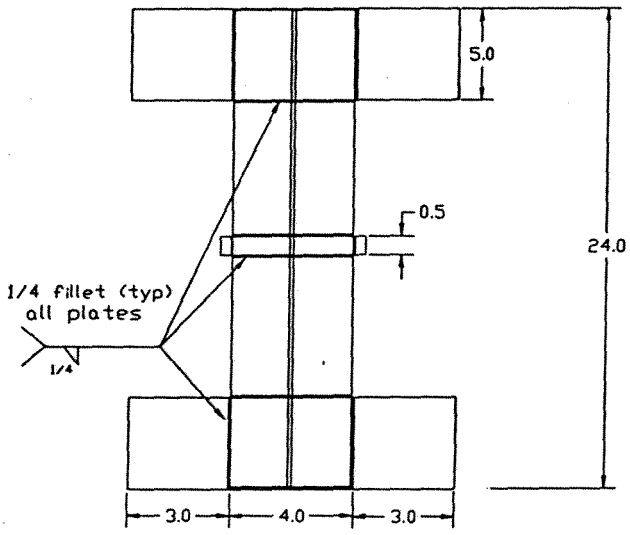

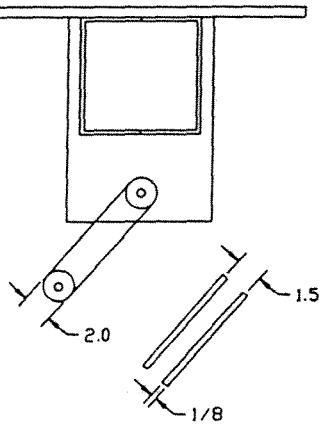

Double Shear - 5/16" Stainless Steel Bolt

For SS Bolts, Min Tensile Strength = 75000 psi

Load on Bolt $P = \frac{250}{0.707} = 354 \text{ lb}$

$\tau \text{ (Double Shear, Shank)} = \frac{P}{2A_s} = \frac{4(354)}{2\pi(\frac{5}{16})^2} = 2219 \text{ psi}$

$F.S. = \frac{\tau_{uts}}{\tau} = \frac{0.577(75000)}{2219} = 19.5$

Tensile Stress - Pulley Housing

$\sigma = \frac{P}{A} = \frac{354}{2(2)(0.125)} = 708 \text{ psi}$

$F.S. = \frac{\sigma_{uts}}{\sigma} = \frac{42000}{708} = 59.4$

Bearing Stress - 1/2" Plate

$\sigma_b = \frac{P}{A_b} = \frac{354}{(0.25)(0.5)} = 2830 \text{ psi}$

$F.S. = \frac{\sigma_{uts}}{\sigma} = \frac{42000}{2830} = 14.84$

Shear Tearout

$\tau = \frac{P}{A_t} = \frac{354}{(1.0)(0.5)} = 708 \text{ psi}$

$F.S. = \frac{\tau_{uts}}{\tau} = \frac{0.577(42000)}{708} = 34.2$

Bending and Shear Stress - Plate/Channel Fillet Welds

Reference: Blodgett, Design of Welded Structures, Section 7.4-8, Table 5

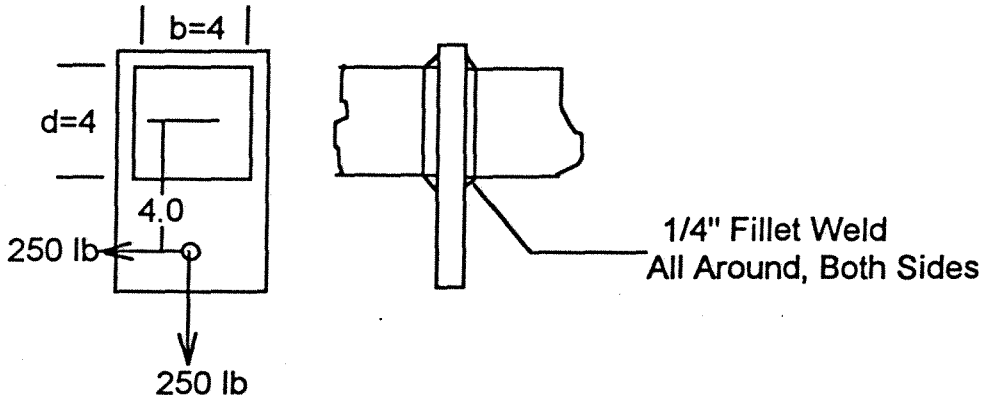

$$\sigma = \frac{M}{S_w} = \frac{250(4.0)}{2(4.0)(4.0)(0.707)(0.25)} = 178 \text{ psi}$$

$$F.S. = \frac{\sigma_{uts}}{\sigma} = \frac{24000}{178} = 135.2$$

$$\tau = \frac{P}{A_w} = \frac{250}{4(4.0)(0.707)(0.25)} = 89 \text{ psi}$$

$$F.S. = \frac{\tau_{uts}}{\tau} = \frac{0.577(24000)}{89} = 156.0$$

Bending and Torsion Stress - Channel Sections

Reference: Blodgett, Design of Welded Structures, Section 2.2-8, Table 2

Assume simply supported beam, center load for conservatism: (L=24")

$$\sigma = \frac{M}{S} = \frac{3PL}{4td(3b+d)}$$

$$= \frac{3(250)(24.0)}{4(0.125)(4.0)(12.0+4.0)} = 563 \text{ psi}$$

$$F.S. = \frac{\sigma_{uts}}{\sigma} = \frac{42000}{563} = 74.6$$

$$\tau = \frac{Tc}{R} = \frac{Tc(b+d)}{2tb^2d^2}$$

$$= \frac{250(4.0)(2.0)(4.0+4.0)}{2(0.125)(4.0)^2(4.0)^2} = 250 \text{ psi}$$

$$F.S. = \frac{\tau_{uts}}{\tau} = \frac{0.577(42000)}{250} = 97.0$$

Bending - Top Plate

Assume fixed-fixed beam, center load to determine end moment: (L=24")

$$\sigma_b = \frac{M}{S_p} = \frac{6PL}{8bt_p^2} \frac{6(250)(24.0)}{8(10.0)(0.25)^2} = 7200 \text{ psi}$$

$$F.S. = \frac{\sigma_{uts}}{\sigma} = \frac{42000}{7200} = 5.83$$

Bending and Shear Stress - Channel/Top Plate Fillet Welds

Reference: Blodgett, Design of Welded Structures, Section 7.4-8, Table 5

Assume fixed-fixed beam, center load to determine end moment: (L=24")

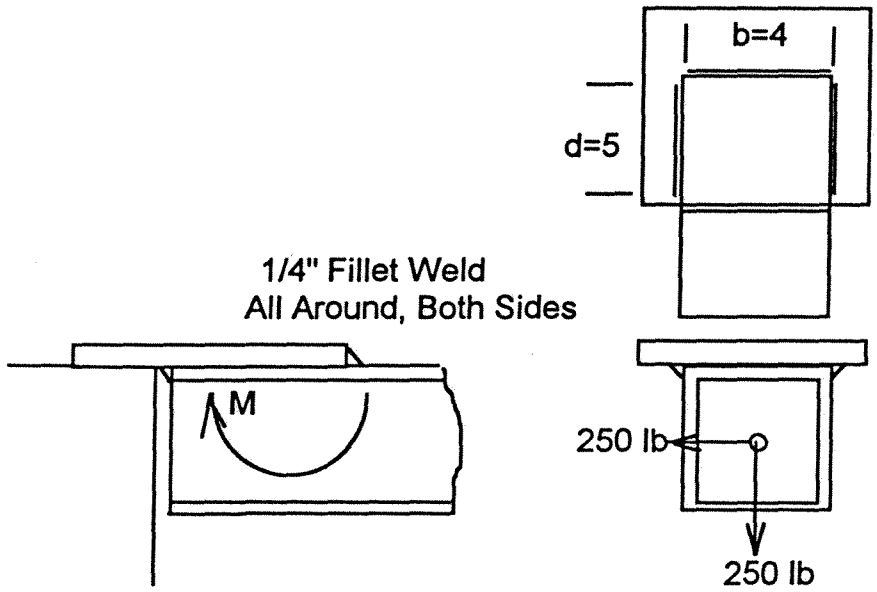

Axial Stress:

$$\sigma = \frac{P}{A_w} = \frac{P}{2(b+d)t_w}$$

$$= \frac{250}{2(4.0+5.0)(0.707)(0.25)} = 79 \text{ psi}$$

Bending Stress:

$$\sigma = \frac{M}{S_w} = \frac{PL}{8(bd + \frac{d^2}{3})t_w}$$

$$= \frac{250(24.0)}{8\{(4.0)(5.0) + \frac{(5.0)^2}{3}\}(0.707)(0.25)} = 150 \text{ psi}$$

Combined Stress:

$$\sigma_{comb} = \sqrt{\sigma^2 + 3\tau^2} = \sqrt{(79+150)^2 + 3(184)^2} = 393 \text{ psi}$$

$$F.S. = \frac{\sigma_{uts}}{\sigma} = \frac{24000}{393} = 61.37$$

Direct Shear Stress:

$$\tau = \frac{P}{A_s} = \frac{250}{2(4.0)(0.707)(0.25)} = 178 \text{ psi}$$

Torsional Stress:

$$\tau = \frac{Tc}{J_w} = \frac{6PLc}{8(b+d)^3} = \frac{6(250)(24.0)}{8(4.0+5.0)^3} = 6 \text{ psi}$$

Total Shear Stress:

$$\tau_{total} = \tau_d + \tau_t = 178 + 6 = 184 \text{ psi}$$

Mag/Cal Facility Hoist

Central Hoist Cable/Pulley Support:

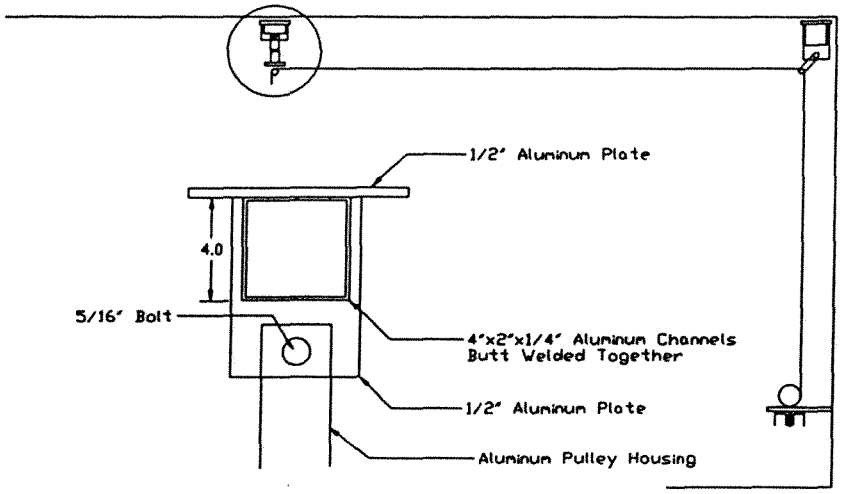

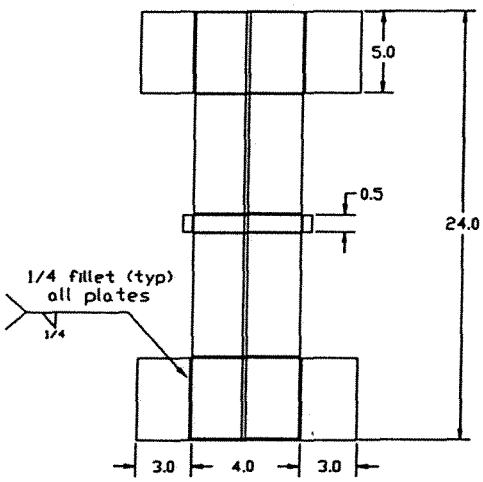

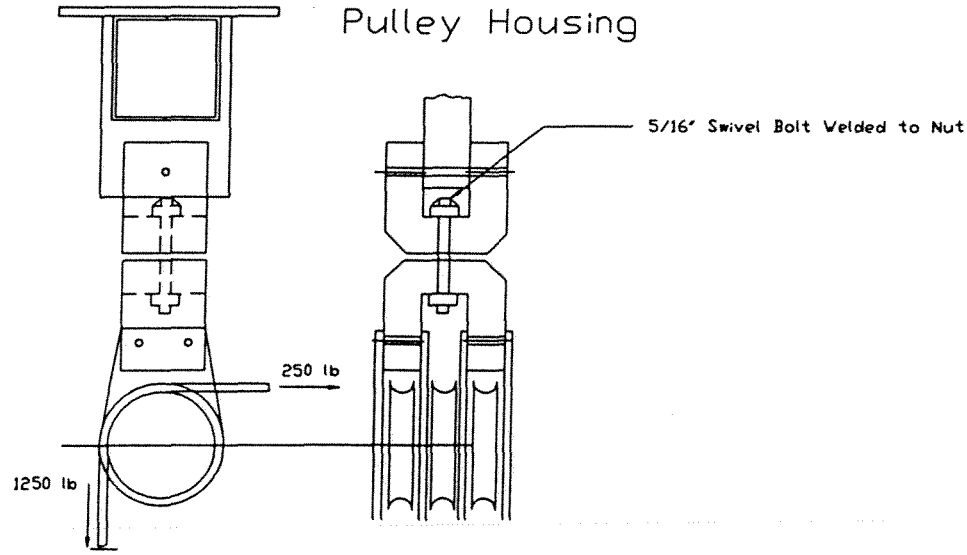

Double Shear - 5/16" Stainless Steel Bolt

For SS Bolts, Min Tensile Strength = 75000 psi

Load on Bolt $P = \sqrt{(1250)^2 + (250)^2} = 1275 \text{ lb}$

$$\tau \text{ (Double Shear, Shank)} = \frac{P}{2A_s} = \frac{4(1275)}{2\pi(\frac{5}{16})^2} = 8313 \text{ psi}$$

$$F.S. = \frac{\tau_{uts}}{\tau} = \frac{0.577(75000)}{8313} = 5.21$$

Tensile Stress - Pulley Housing 5/16" Swivel Bolt

$P_t = 1275 \text{ lb}$

$$\sigma = \frac{P}{A_t} = \frac{1275}{0.0524} = 24333 \text{ psi}$$

$$F.S. = \frac{\sigma_{uts}}{\sigma} = \frac{75000}{24333} = 3.08$$

Thread Stress - Pulley Housing 5/16" Swivel Bolt

$$\tau = \frac{2P}{\pi d_m L_e} = \frac{2P}{2\pi\sqrt{\frac{A_m}{\pi}}L_e} = \frac{(1275)}{\pi\sqrt{\frac{0.0454}{\pi}}(\frac{5}{16})} = 10813 \text{ psi}$$

$$F.S. = \frac{\sigma_{uts}}{\sigma} = \frac{0.577(75000)}{10813} = 4.00$$

Bearing Stress - 1/2" Plate

$$\sigma_b = \frac{P}{A_b} = \frac{1275}{(0.25)(0.5)} = 10200 \text{ psi}$$

$$F.S. = \frac{\sigma_{uts}}{\sigma} = \frac{42000}{10200} = 4.12$$

Shear Tearout

$$\tau = \frac{P}{A_t} = \frac{1275}{(1.0)(0.5)} = 2550 \text{ psi}$$

$$F.S. = \frac{\tau_{uts}}{\tau} = \frac{0.577(42000)}{2550} = 9.50$$

Bending and Shear Stress - Plate/Channel Fillet Welds

Reference: Blodgett, Design of Welded Structures, Section 7.4-8, Table 5

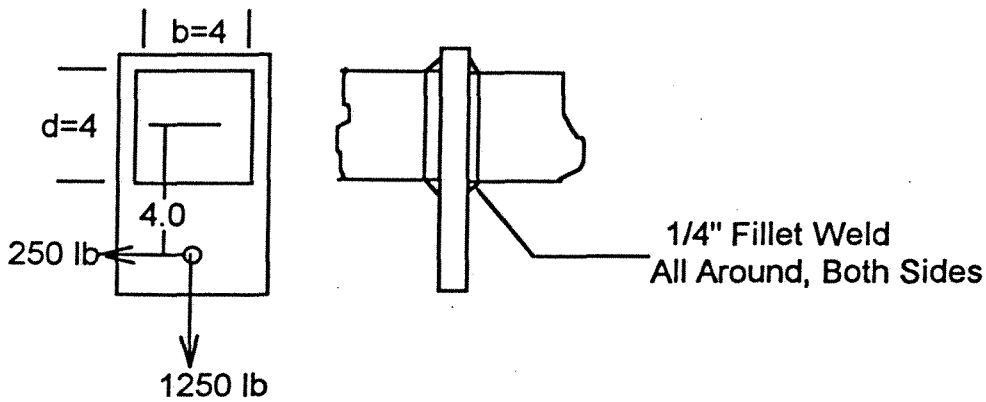

$$\sigma = \frac{M}{S_w} = \frac{1250(4.0)}{2(4.0)(4.0)(0.707)(0.25)} = 884 \text{ psi}$$

$$F.S. = \frac{\sigma_{uts}}{\sigma} = \frac{24000}{884} = 27.1$$

$$\tau = \frac{P}{A_w} = \frac{250}{4(4.0)(0.707)(0.25)} = 89 \text{ psi}$$

$$F.S. = \frac{\tau_{uts}}{\tau} = \frac{0.577(24000)}{89} = 156.0$$

Bending and Torsion Stress - Channel Sections

Reference: Blodgett, Design of Welded Structures, Section 2.2-8, Table 2

Assume simply supported beam, center load for conservatism: (L=24")

$$\sigma = \frac{M}{S} = \frac{3PL}{4td(3b+d)}$$

$$= \frac{3(1250)(24.0)}{4(0.125)(4.0)(12.0+4.0)} = 2813 \text{ psi}$$

$$F.S. = \frac{\sigma_{uts}}{\sigma} = \frac{42000}{2813} = 14.94$$

$$\tau = \frac{Tc}{R} = \frac{Tc(b+d)}{2tb^2d^2}$$

$$= \frac{250(4.0)(2.0)(4.0+4.0)}{2(0.125)(4.0)^2(4.0)^2} = 250 \text{ psi}$$

$$F.S. = \frac{\tau_{uts}}{\tau} = \frac{0.577(42000)}{250} = 97.0$$

Bending - Top Plate

Assume fixed-fixed beam, center load to determine end moment: (L=24")

$$\sigma_b = \frac{M}{S_p} = \frac{6PL}{8bt_p^2} \frac{6(1250)(24.0)}{8(10.0)(0.5)^2} = 9000 \text{ psi}$$

$$F.S. = \frac{\sigma_{uts}}{\sigma} = \frac{42000}{9000} = 4.66$$

Bending and Shear Stress - Channel/Top Plate Fillet Welds

Reference: Blodgett, Design of Welded Structures, Section 7.4-8, Table 5

Assume fixed-fixed beam, center load to determine end moment: (L=24")

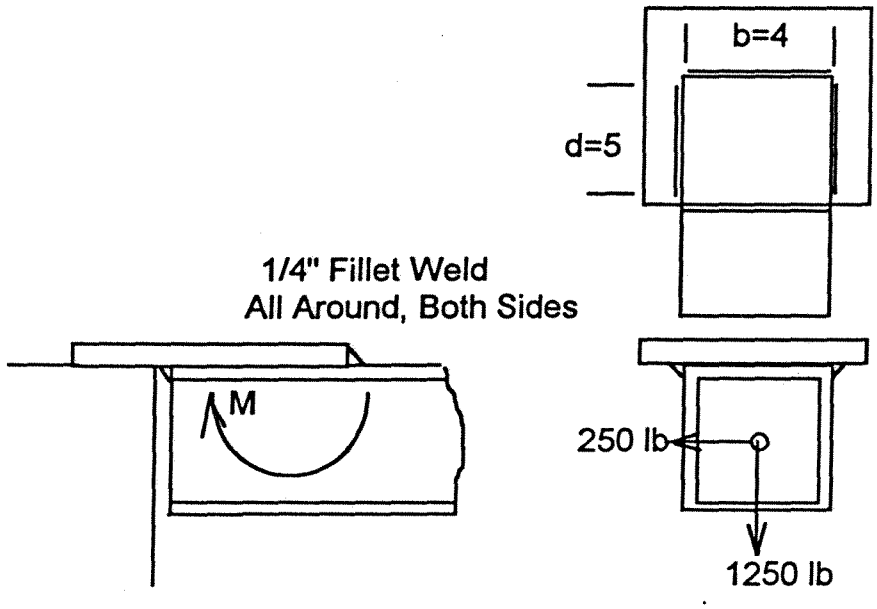

Axial Stress:

$$\sigma = \frac{P}{A_w} = \frac{P}{2(b+d)t_w}$$

$$= \frac{1250}{2(4.0+5.0)(0.707)(0.25)} = 393 \text{ psi}$$

Bending Stress:

$$\sigma = \frac{M}{S_w} = \frac{PL}{8(bd + \frac{d^2}{3})t_w}$$

$$= \frac{1250(24.0)}{8\{(4.0)(5.0) + \frac{(5.0)^2}{3}\}(0.707)(0.25)} = 750 \text{ psi}$$

Combined Stress:

$$\sigma_{comb} = \sqrt{\sigma^2 + 3\tau^2} = \sqrt{(393+750)^2 + 3(184)^2} = 1186 \text{ psi}$$

$$F.S. = \frac{\sigma_{uts}}{\sigma} = \frac{24000}{1186} = 20.2$$

Direct Shear Stress:

$$\tau = \frac{P}{A_s} = \frac{250}{2(4.0)(0.707)(0.25)} = 178 \text{ psi}$$

Torsional Stress:

$$\tau = \frac{Tc}{J_w} = \frac{6PLc}{8(b+d)^3} = \frac{6(250)(24.0)}{8(4.0+5.0)^3} = 6 \text{ psi}$$

Total Shear Stress:

$$\tau_{total} = \tau_d + \tau_t = 178 + 6 = 184 \text{ psi}$$

Mag-Cal Facility Winch/Drum

Properties of Drum:

Diameter = 2.5" OD
Thickness = 0.25"
Width = 4'
Material = Stainless Steel
Hardness = Slightly less than RC20
Poisson's Ratio = 0.3
Check Fleet Angle to Scheave:

Drum Width = 4", Half Width = 2"

Length to Scheave = 20 ft = 240 "

Fleet Angle $\theta = \arctan\frac{2}{240} = 0.5^o \le 1.5^o$ good

Check Load Capacity of Drum:

Reference, Machinery's Handbook, 17th Edition, Industrial Press, Pg. 462:

Radial Pressure $p = \frac{2P}{Dd} = \frac{2(250)}{(2.5)(0.25)} = 800$ psi

Tangential Stress in Drum:

$$\sigma = \frac{pD}{2dt} = \frac{800(2.5)}{2(0.25)(0.25)} = 16000 \text{ psi} \qquad F.S. = \frac{\sigma_{uts}}{\sigma} = \frac{100000}{16000} = 6.25$$

Critical Buckling Pressure of Drum:

Reference: Roark & Young, Formulas for Stress & Strain, 6th Edition, Table 35 Case 19b:

$$q' = 0.807\frac{Et^2}{lr^2}\sqrt[4]{\left(\frac{1}{1-\mu^2}\right)^3\frac{t^2}{r^2}} = 0.807\frac{(30x10^6)(0.25)^2}{4(1.25)^2}\sqrt[4]{\left(\frac{1}{1-0.3^2}\right)^3\frac{(0.25)^2}{(1.25)^2}} = 116206 \text{ psi}$$

Note: This formulation applies to thin walled vessels defined by r/t of 10 or greater. Actual r/t = 1.25/0.25 = 5; Classified as a thick-walled vess Therefore critical buckling is actually higher than calculated. Also, stre gradient exists from inside to outside, but maximum thick-walled cylinder stress is lower than that predicted by thin-walled method.
Conclusion: Drum is good for 250 lbs.

National Aeronautics and
Space Administration

Goddard Space Flight Center
Greenbelt, Maryland
20771

313 December 14, 1995

TO: 750.5/NSI Technical Services/Mr. Crompton

FROM: 313/Materials Engineering Branch

SUBJECT: Heat Treatment of Pegasus Test Winch

INTRODUCTION
You furnished a sketch of a one-half ton winch (Figure 1) that is intended for use in a magnetic test facility to suspend a Pegasus launch vehicle. The winch had been disassembled and the components heated to very approximately 1150°F for an unknown length of time to demagnetize the parts. You also furnished a material list and Rockwell C hardness values for some of the parts, which are 300 series stainless steels and type 416 stainless steel. You requested an evaluation of the potential effect of this heat treatment on the load rating of the winch. Per your discussion with the manufacturer's representative, he stated that the load rating was invalidated by this processing.

CONCLUSIONS/RECOMMENDATIONS
1. The strength reduction could be up to 40% depending on how the manufacturer processed the components.

2. Two options are:
- Buy a new winch. At $600, this is probably the cheapest option.
- Verify the materials and strength levels of all load-bearing components followed by proof testing. The manufacturer's minimum mechanical properties or hardness values would have to be obtained to ascertain that the load capability has not been compromised. Material verification can be performed fairly easily using X-ray fluorescence, which is available at GSFC. The proof test is standard operating procedure for a lifting item.

3. In the future, demagnetize electrically rather than thermally unless there is good reason for doing the latter and material effects are understood.

DISCUSSION
The 300 series stainless steels are not hardenable by heat treatment but can be strengthened by cold working. The Rockwell C 20-35 range for the 300 series parts (after ~1150°F) represents approximately 1/4 hard to 1/2 hard cold worked material, not annealed. Heating to 1150F would reduce the hardness of 1/2 or 3/4 hard material to the neighborhood of the present range. This corresponds to a 10 to 25% drop in yield and ultimate strengths. These hardness values indicate that the parts were not heated to the standard annealing temperature of 2000°F, since this would

have resulted in a hardness of about Rockwell B 90. Heating in the range of 800-1600°F promotes sensitization of normal-carbon and unstabilized 300 series stainless steels. While this probably would not be a problem in a benign environment, it is prudent to avoid the practice.

Type 416 can be hardened by oil quenching from 1850°F to a high strength/low ductility condition and then tempering in the range of 300-1200°F to improve toughness. Higher tempering temperatures produce lower ultimate and yield strengths. If the manufacturer incorporated a 300°F temper, subjecting the parts to 1150°F would result in losses of 40% in yield and ultimate stregnth. On the other hand, if the manufacturer uses the type 416 parts in the annealed condition, exposure to 1150°F would not result in a strength loss.

I discussed the question of demagnetizing ferromagnetic GSE materials with Mr. Darryl Mitchell of GSFC. Their approach is to electrically demagnetize ferromagnetic fixtures without disassembly and then measure the fixture's field as the fixture is rotated. If the residual magnetism cannot be lowered sufficiently by deperming, they cut ferromagnetic stock and magnetize it to produce a compensating magnet that is mounted on the fixture. The field measurement is repeated, with adjustment of the compensating magnet strength and position until the fixture is nulled. This has been a successful approach that does not raise an issue of reducing the load rating of the fixture.

I consulted with Dr. Henning Leidecker of Code 313 regarding the role of temperature in reducing residual magnetism. Heating a ferromagnetic material to less than 80% of its Curie temperature (absolute units) will be ineffective. Heating to at least 90% of the Curie temperature will be of some benefit while 105%+ is much better. Cooling in a zero-B environment, not in the Earth's field, will minimize residual magnetism. The reported 1150°F treatment corresponds to 87% of the Curie temperature for steels (1400°F) and therefore was of some help. However, electrically demagnetizing an item is as effective as the best thermal treatment and does not raise a strength issue. Also, 400 series martensitic stainless steels will be ferromagnetic at room temperature regardless of heat treatment.

Please contact me (6-8472) or Dr. Leidecker (6-9180) if you have any questions or comments.

Mike Barthelmy

Mike Barthelmy

cc:
313/Dr. Chern
313/Dr. Leidecker
313/Staff
470/Mr. Clark
750/Mr. Chan
754/Mr. Mitchell

FIGURE 1

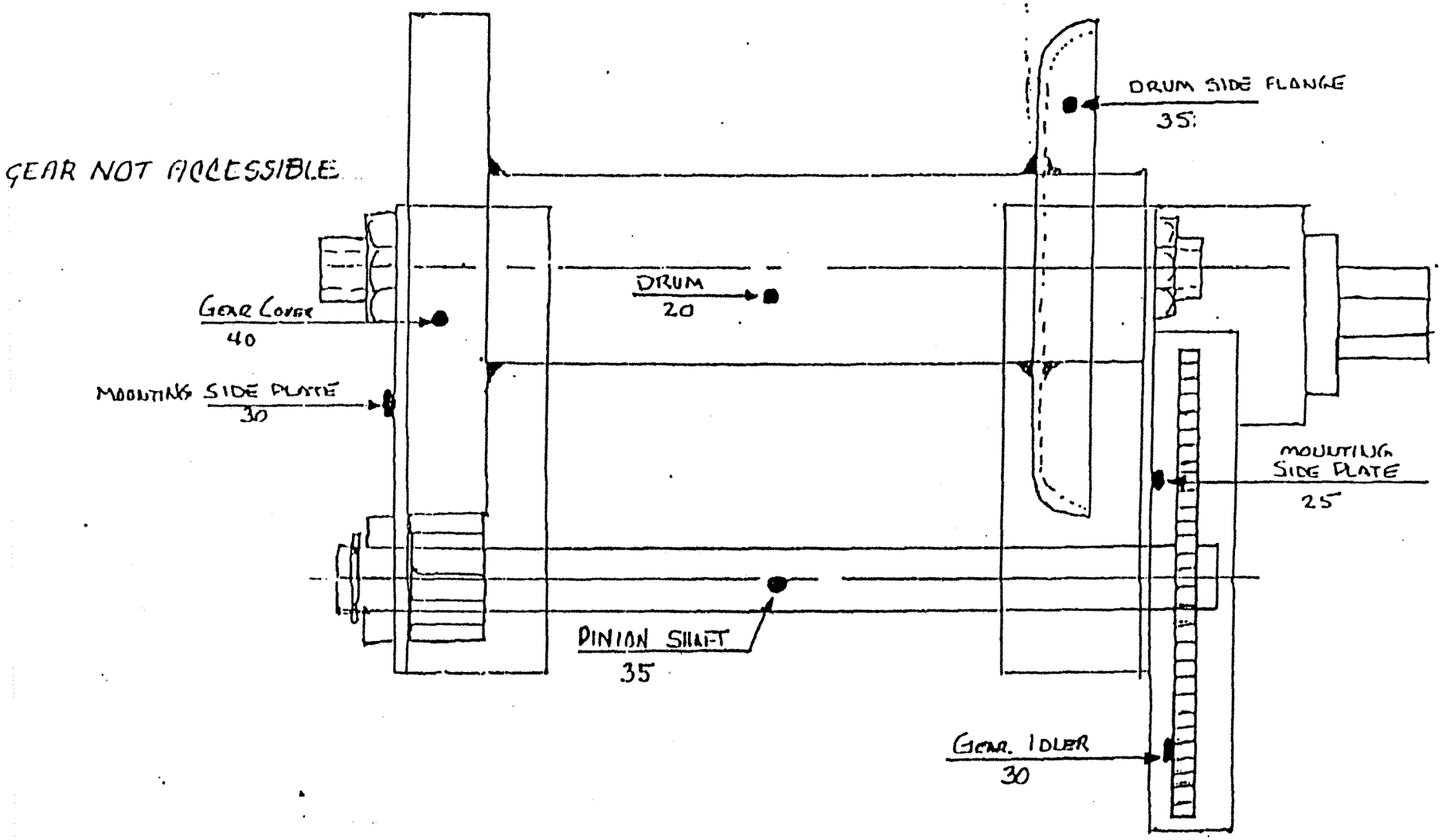

ROCKWELL - C

National Aeronautics and
Space Administration
Goddard Space Flight Center
Wallops Flight Facility
Wallops Island, VA 23337-5099

Reply to Attn of: 823

December 10, 1996

TO: 750/RECERT Manager

FROM: 823/Deputy RECERT Manager

SUBJECT: Building F-23 Hoist Wench 300% Proof Test

REF: Memo L. Bennett to E. Ransone, NSI Document LHB110496

As requested by Mr. Lawrence Bennett of NSI, a 300% proof test has been conducted on the stainless steel wench which was originally installed as part of the Building F-23 hoist. The results of the tests and inspections performed are enclosed. The inspections indicate no signs of yielding or failure under 300% proof load conditions. It should be pointed out the wench tested is the one which was rejected for use as a result of concern over post delivery in house heat treatment. It was anticipated this device may fail as a result of this heat treatment process, but there were no indications of this occurring. The one presently installed in the F-23 facility is identical to the one tested, with the exception that it is in factory new condition and has not received any post delivery heat treatment. Therefore, the concern raised over heat treatment of the original wench does not exist with the wench presently in service. The wench presently in service should be expected to exhibit similar or higher capacity than the identical unit subjected to the 300% proof test.

I believe this brings all open items associated with this hoist to closure and request documentation be provided certifying this hoist for critical lifts.

Emmett Ransone

Enclosure:

cc:
823/Mr. B. Flowers
823/Mr. D. Ward
✓NSI/Mr. W. Hargrove
NSI/Mr. L. Bennett

Memorandum

NSI Technology Services Corporation
Aerospace Technology Applications Center, A ManTech International Company

To: W.T. Hargrove
Site Supervisor

From: R.C. Hall
Lead Technician

Subject: Hoist F-23-1, Visual Inspection, Load Test & NDE Inspection

Date: December 2, 1996

Copies:

In reply refer to:

1. Hoist was disassembled, inspected visually, NDE and all load bearing parts measured for trueness.

2. Hoist was reassembled and a full drum of 1/4" wire measured .258".

3. Hoist was installed in the sling test machine. A load test was applied utilizing the hoist to 1500 lbs. to 1680 lbs. for 3 minutes.

4. After the load test, the hoist was again disassembled and re-inspected for distortion.

Summary: The pre-test, post-test measurements and dye penetrant test produced no indication of distortion of failure.

R.C. Hall
Lead Technician

ENCLOSURE

Certificate of Testing

NSI TECHNOLOGY SERVICES CORPORATION

Wallops Flight Facility

Wallops Island, Virginia 23337

Phone: 301-286-2601 Fax: 301-286-1735

Customer Name:	TRIPP RANSONE		
Invoice No:		Description:	HAND WINCH
Test Date:	11/22/96	Size:	
Order Number:		Length:	
Serial Number:		Test Duration:	5.2 Minutes
Test Number:		WLL:	
Test Method:	PROOF=WLL	Peak Load:	1,680 LBS

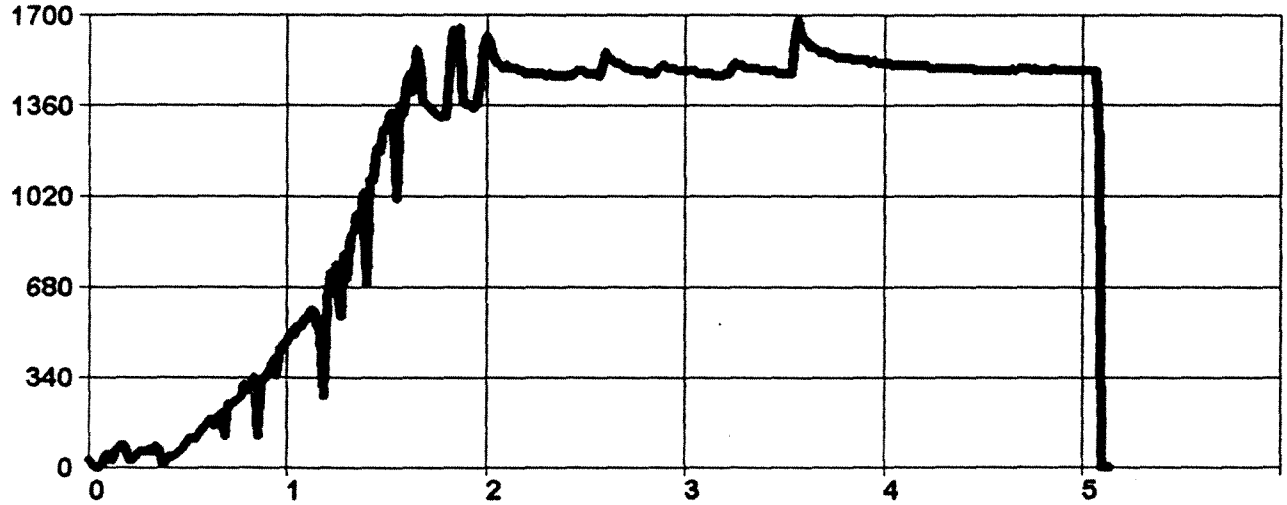

Plot of Load (LBS) vs Time (Minutes)

PROOF TEST EQUIPMENT CALIBRATED TO ASTM E-4 +/- 1% TRACEABLE TO NATIONAL INSTITUTE OF STANDARDS AND TECHNOLOGY.

THIS TEST HAS BEEN COMPLETED IN ACCORDANCE WITH NASA SAFETY STANDARD FOR LIFTING DEVICES AND EQUIPMENT NSS/GO 1740.9B.

TEST CERTIFIED BY: William T. Hargrove

WILLIAM T. HARGROVE

TEST RESULTS:
- [x] Acceptable
- [ ] Not Acceptable

Conducted by: H. Henry

H. Henry

C:\TEST2\DATA NOT SAVED

DRUM MEASUREMENTS

A-A ORIG / AFTER TEST

1.- 2.505" / 2.505"

2.- 2.505" / 2.505"

3.- 2.505" / 2.505"

B-B

1.- 2.503" / 2.502"

2.- 2.506" / 2.504"

3.- 2.506" / 2.503"

I D - GEAR TO DRUM SIDE PLATE

F.- 2.930" / 2.932"

G.- 2.947" / 2.949"

H.- 2.940" / 2.940"

I.- 2.932" / 2.932"

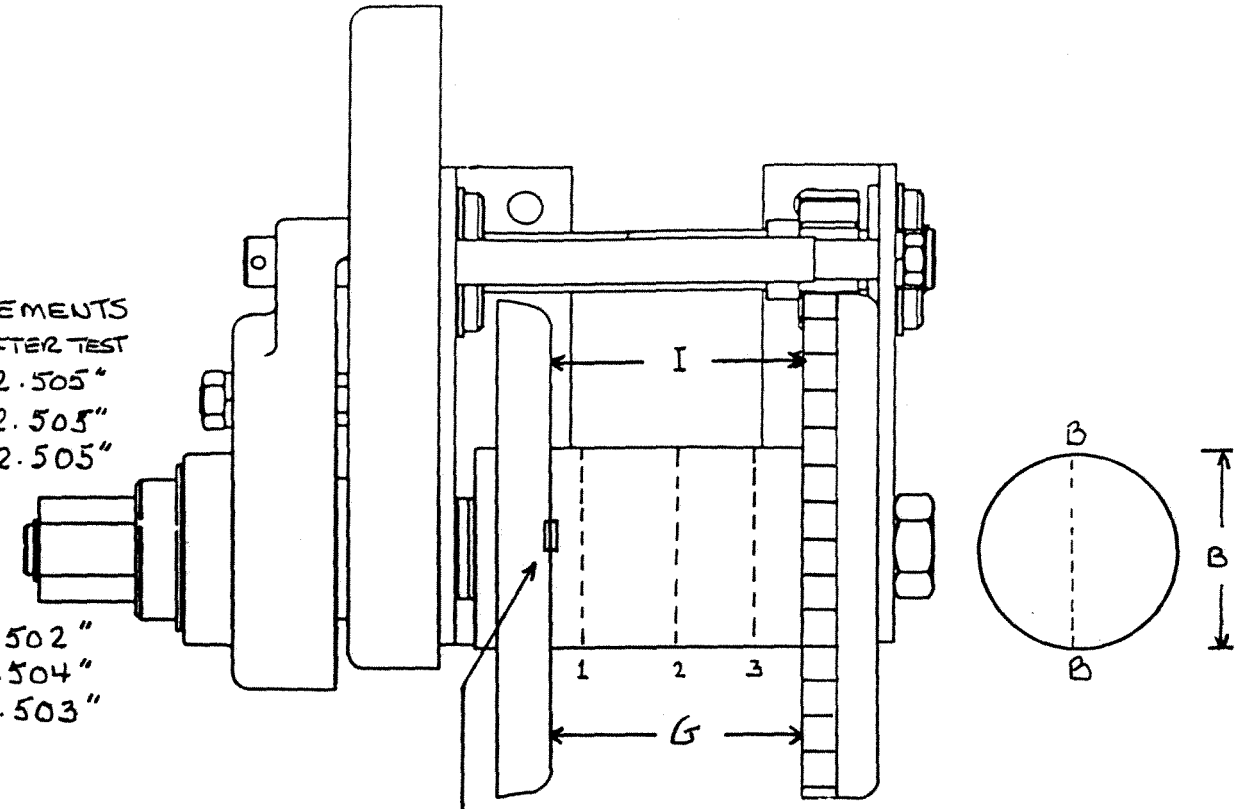

TOP VIEW

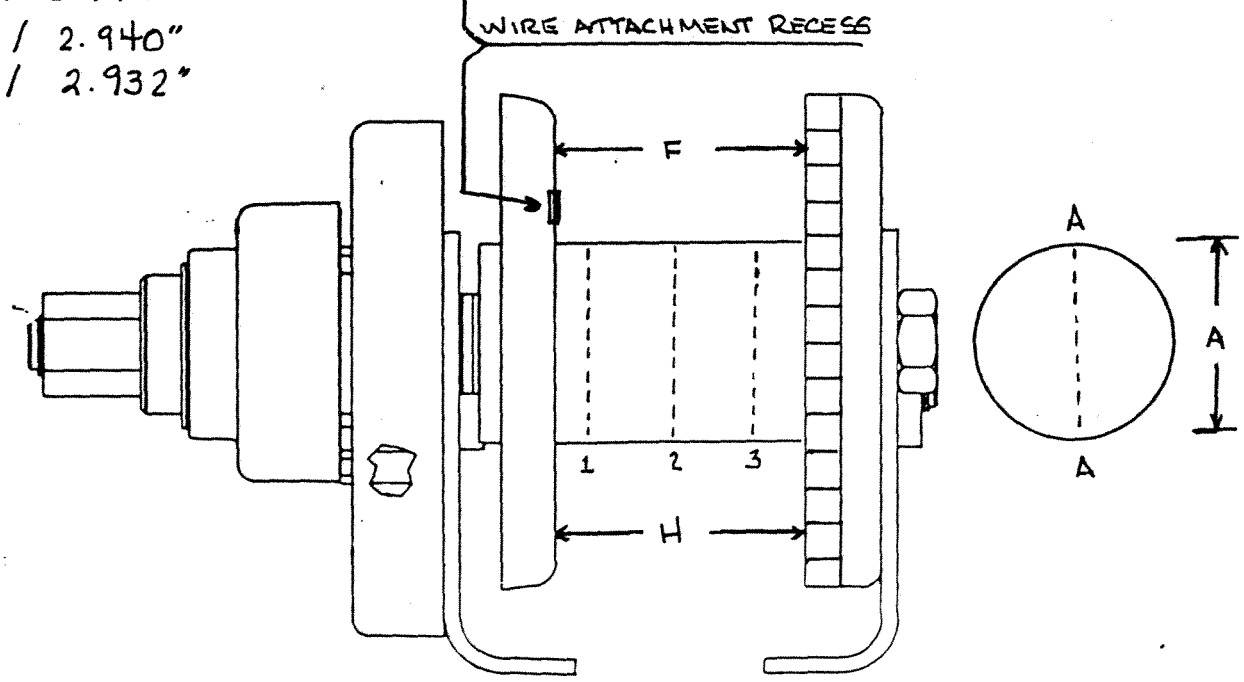

FRONT VIEW

BEFORE TEST

LIQUID PENETRANT EXAMINATION RECORD
VISIBLE DYE METHOD

Procedure Reference: 40-12-102 Report Number: _____
Acceptance Std. Reference: _____ Date Performed: 11/21/96
Item Identification: F23 HOIST (F-23-1)

Materials Used:
Cleaner: DR60 Developer: D100 Penetrant: DP50
Other: _____

Examination Method (Check-off as completed):

	Completed	Not Required
1. Surface Preparation:		
a. Paint Removal (chipping, grinding, wire brush, solvent).		X
b. Removal of surface irregularities or rust (grinding, brushing).		X
2. Inspection Sequence:		
a. Surface pre-cleaning (solvent, detergent, clean rags, etc.)	✓	
b. Surface drying, >7min. (to allow evaporation of cleaning liquids).	✓	
c. Penetrant application (sprayed, brushed or dipped). Note: Surface temperature of the specimen must be between 60 degrees and 125degreesF. Procedure requalification is required for examinations outside of this range.	✓	
d. Penetrant dwell time: Temperature range 60-90 degrees; 12-20 minutes.	✓	
Temperature range 90-125 degreesF; 8-15 minutes.		
e. Penetrant removal (clean rags, dampened with solvent).	✓	
f. Surface drying, 7-10 minutes.	✓	
g. Developer application (aerosol spray, uniform coating).	✓	
h. Developer dwell time (to permit bleed-out), 7-10 minutes.	✓	

LIQUID PENETRANT EXAMINATION RECORD
Page 2

i. Examination (performed within 7-10 minutes of developer application). ✓

3. Acceptance Criteria: The following indications are unacceptable:

   a. Any cracks and/or linear indications.

   b. Rounded indications with dimensions greater than 3/16 inch.

   c. Four or more rounded indications in a line separated by 1/16 inch or less, edge to edge.

4. **Examination Results: Describe all unacceptable indications.**

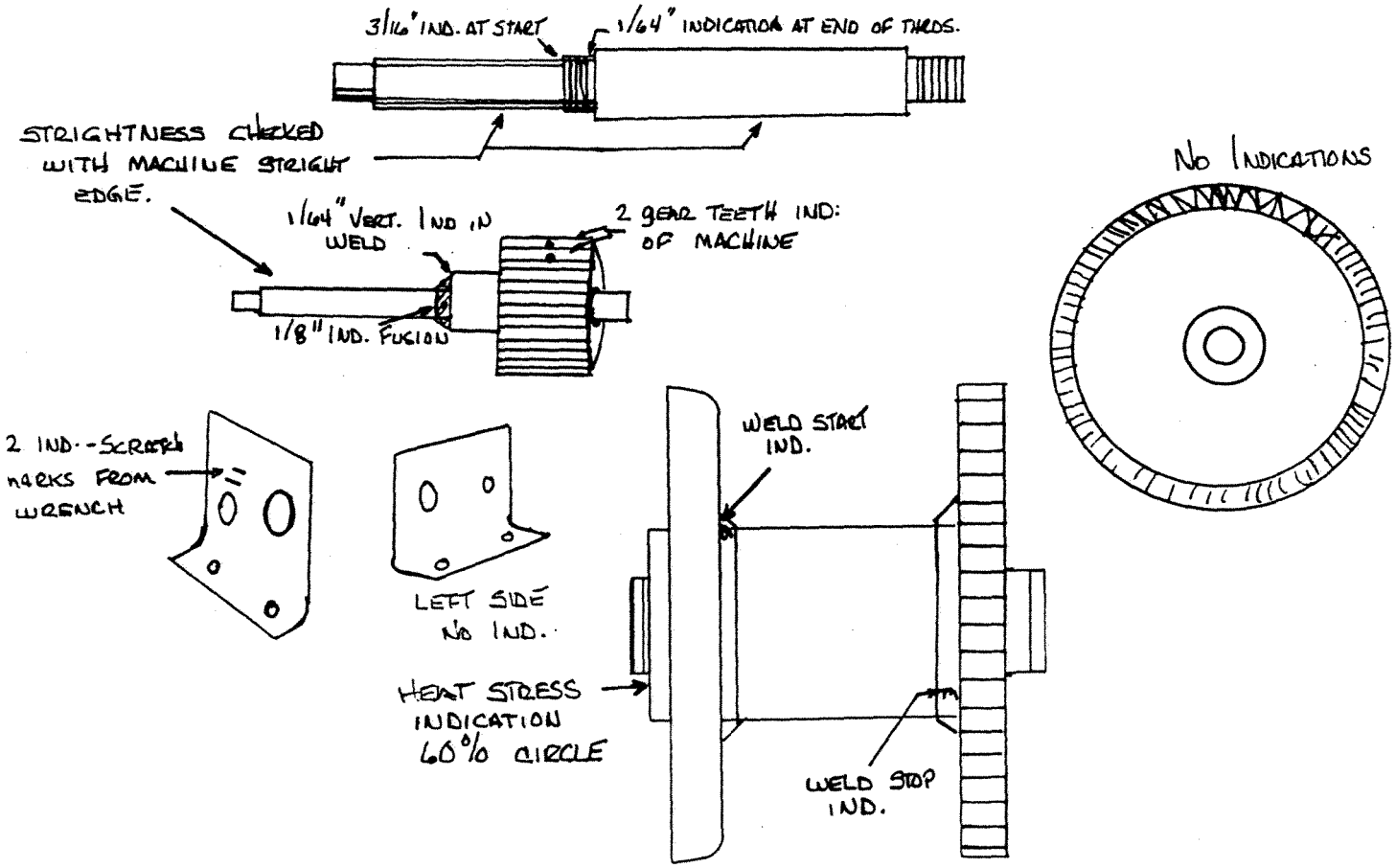

✓ Acceptable _____ Unacceptable

Ronald C. Hall 11/21/96
Signature, Inspector(s) Date

AFTER TEST

LIQUID PENETRANT EXAMINATION RECORD
VISIBLE DYE METHOD

Procedure Reference: 40-12-102 Report Number: _____
Acceptance Std. Reference: _____ Date Performed: 11/22/96
Item Identification: F 23-1 HOIST

Materials Used:
Cleaner: DR60 Developer: D100 Penetrant: DP50
Other: _____

Examination Method (Check-off as completed):	Completed	Not Required
1. Surface Preparation:		
a. Paint Removal (chipping, grinding, wire brush, solvent).		X
b. Removal of surface irregularities or rust (grinding, brushing).		X
2. Inspection Sequence:		
a. Surface pre-cleaning (solvent, detergent, clean rags, etc.)	✓	
b. Surface drying, >7min. (to allow evaporation of cleaning liquids).	✓	
c. Penetrant application (sprayed, brushed or dipped). Note: Surface temperature of the specimen must be between 60 degrees and 125degreesF. Procedure requalification is required for examinations outside of this range.	✓	
d. Penetrant dwell time: Temperature range 60-90 degrees; 12-20 minutes.	✓	
Temperature range 90-125 degreesF; 8-15 minutes.		
e. Penetrant removal (clean rags, dampened with solvent).	✓	
f. Surface drying, 7-10 minutes.	✓	
g. Developer application (aerosol spray, uniform coating).	✓	
h. Developer dwell time (to permit bleed-out), 7-10 minutes.	✓	

LIQUID PENETRANT EXAMINATION RECORD
Page 2

i. Examination (performed within 7-10 minutes of developer application). ✓

3. Acceptance Criteria: The following indications are unacceptable:

   a. Any cracks and/or linear indications.

   b. Rounded indications with dimensions greater than 3/16 inch.

   c. Four or more rounded indications in a line separated by 1/16 inch or less, edge to edge.

4. **Examination Results: Describe all unacceptable indications.**

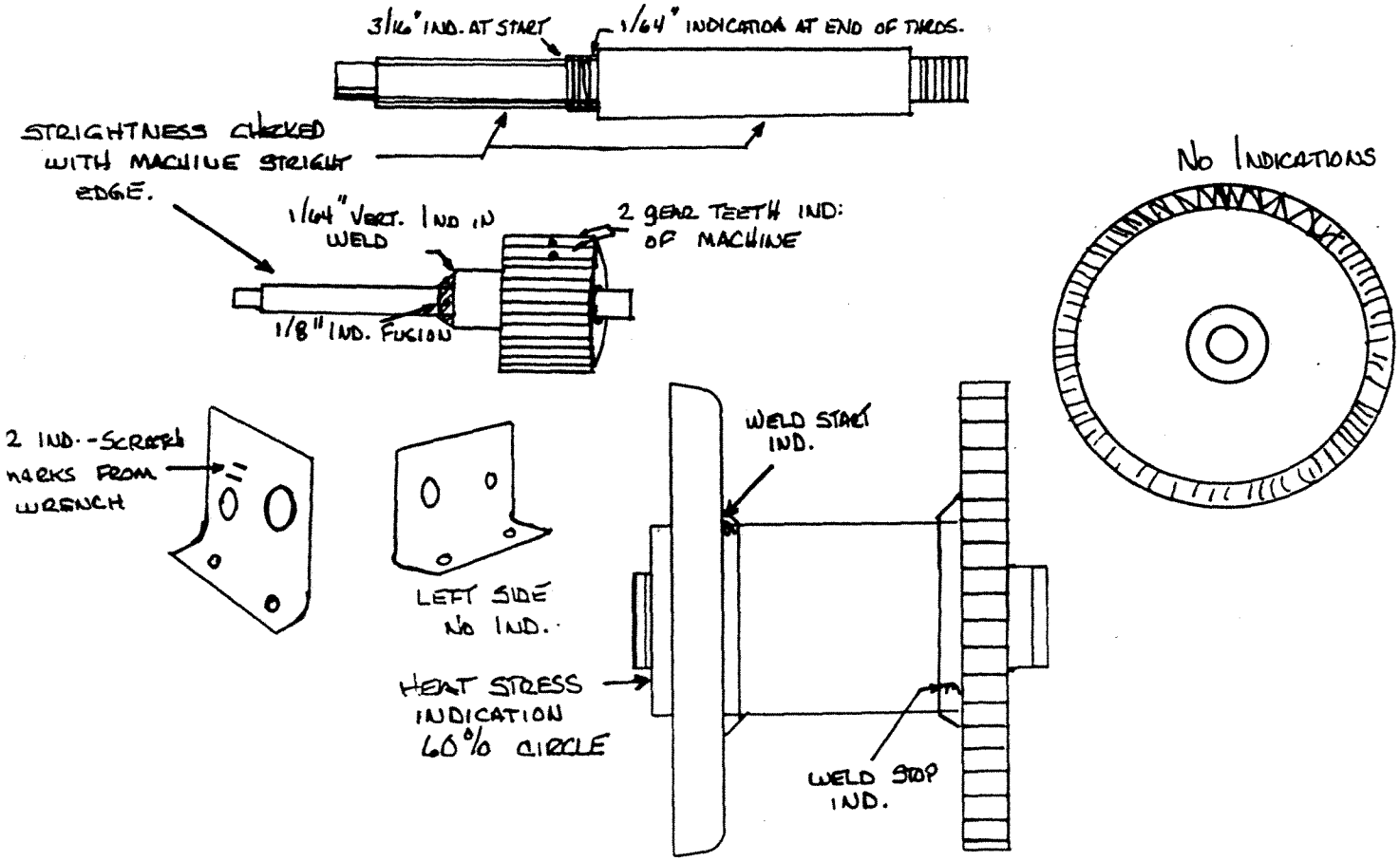

✓ Acceptable _____ Unacceptable

Ronald C. Hall 11/22/96
Signature, Inspector(s) Date

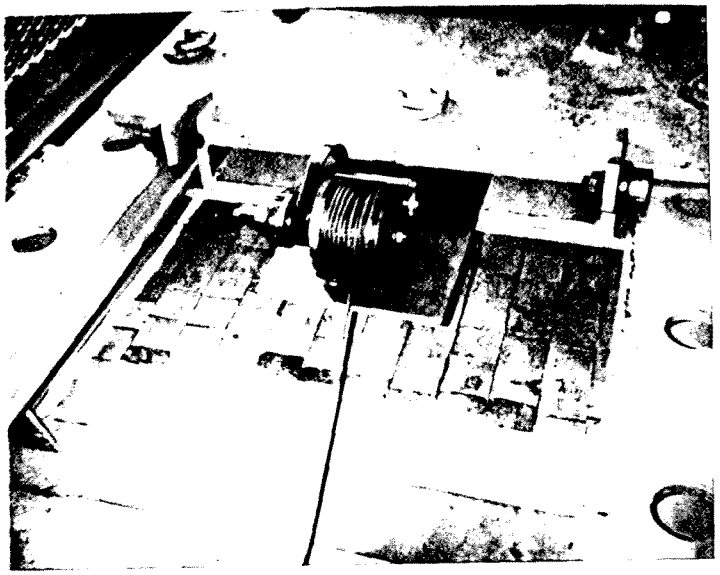

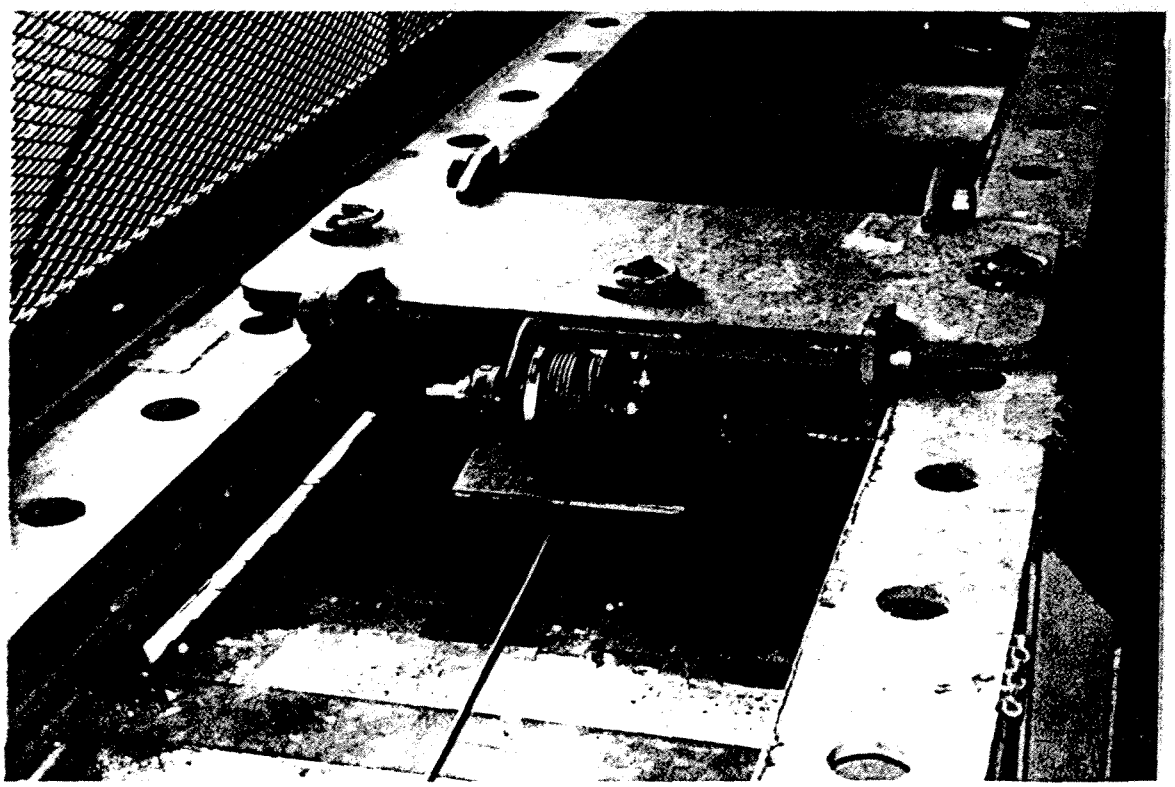

DOWNS CRANE & HOIST CO. INC.

8827 SOUTH JUNIPER STREET
LOS ANGELES, CALIFORNIA 90002 • (213) 589-6061

DATA TRANSMITTAL AND CERTIFICATION

SOLD TO

NSI TECHNOLOGY SERVICES CORPORATION
GODDARD SPACE FLIGHT CENTER
CODE 750.5
GREENBELT MD 20771

SO 25900H
ISSUE NO.003

PLEASE REFER TO THIS NUMBER IN ALL CORRESPONDENCE

PURCHASE ORDER NO. 95BR0147

SHIP TO
NSI TECHNOLOGY SERVICES CORPORATION
WALLOPS FLIGHT FACILITY
BLDG N-159 ROOM W-152
WALLOPS ISLAND VA 23337

MARKS 95BR0147

DATE OF ORDER 06/25/95

DATE SCHEDULED TO SHIP

DATE SHIPPED

DRAWING(S) ENCLOSED

DATA PROVIDED WITH THIS TRANSMITTAL PER YOUR REQUEST AS FOLLOWS:

- ☐ FOR CUSTOMER APPROVAL. Please sign and return one copy of approval prints promptly. No further work can be scheduled on this item until written approval is received in our office.
- ☒ PRELIMINARY DATA ONLY.
- ☒ CERTIFIED DIMENSION PRINTS. Approved for construction.
- ☐ REVISED, SUPERSEDES DATA PREVIOUSLY ISSUED.
- ☐ INSTRUCTION AND/OR MAINTENANCE DATA.
- ☐ SEE REMARKS

REMARKS

DISTRIBUTION	MYLAR	SEPIA	BLUEPRINT	PHOTOCOPY	OTHER
ATTN: AL ZORN					983EC710 WR1A-TVL-2-6

TRANSMITTAL ISSUED ON AUGUST 2, 1995 BY J W DOWNS III

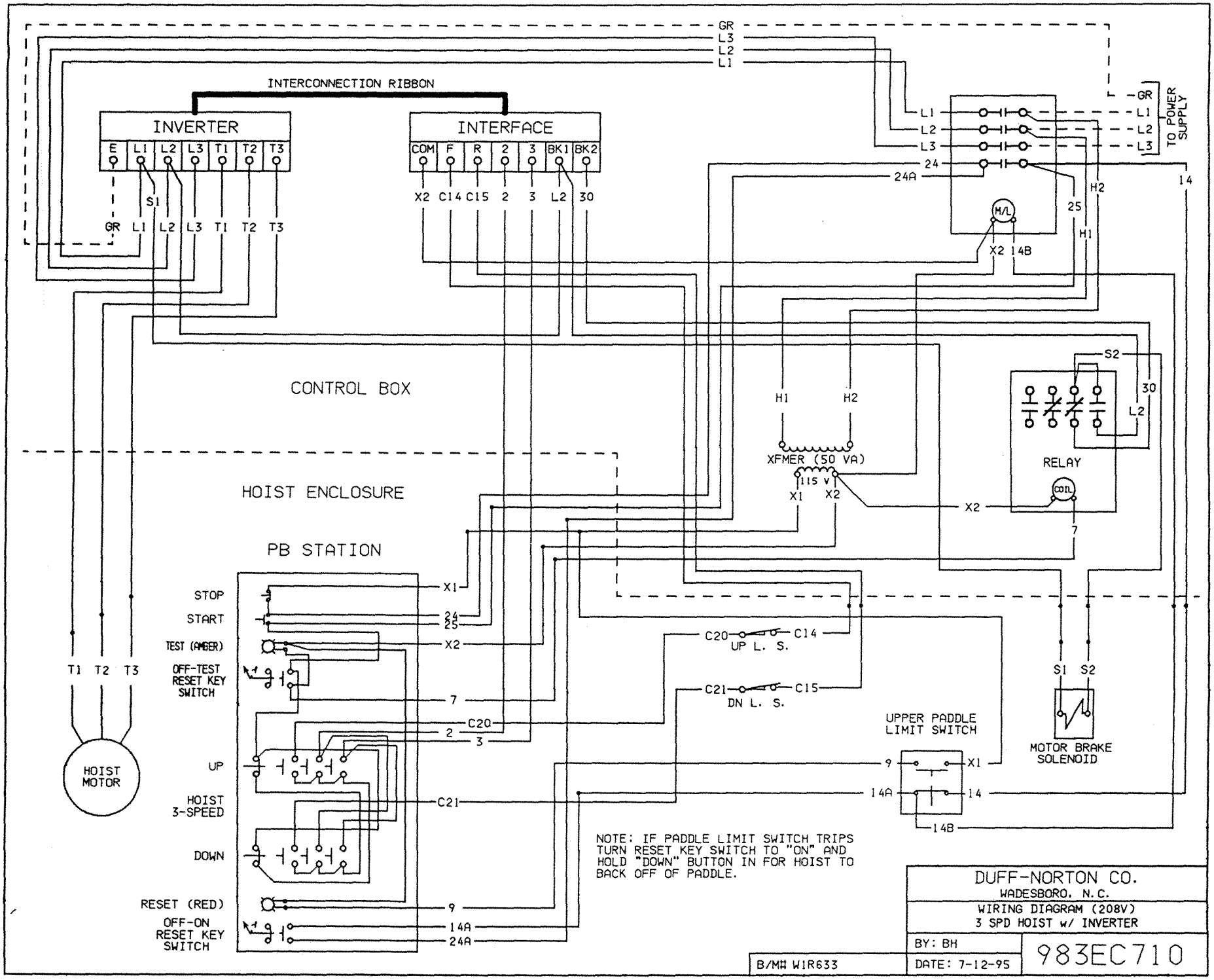
INTERCONNECTION RIBBON
INVERTER
E L1 L2 L3 T1 T2 T3
INTERFACE
COM F R 2 3 BK1 BK2
X2 C14 C15 2 3 L2 30
GR L3 L2 L1
TO POWER SUPPLY
24
24A
25
H2
H1
14
M/L
X2 14B
S1
GR L1 L2 L3 T1 T2 T3
CONTROL BOX
HOIST ENCLOSURE
PB STATION
H1 H2
XFMER (50 VA)
115 V
X1 X2
RELAY
COIL
S2
30
L2
7
STOP
START
TEST (AMBER)
OFF-TEST RESET KEY SWITCH
UP
HOIST 3-SPEED
DOWN
RESET (RED)
OFF-ON RESET KEY SWITCH
X1
24
25
X2
7
C20
2
3
C21
9
14A
24A
C20 C14
UP L. S.
C21 C15
DN L. S.
UPPER PADDLE LIMIT SWITCH
9 X1
14A 14
14B
S1 S2
MOTOR BRAKE SOLENOID
T1 T2 T3
HOIST MOTOR
NOTE: IF PADDLE LIMIT SWITCH TRIPS TURN RESET KEY SWITCH TO "ON" AND HOLD "DOWN" BUTTON IN FOR HOIST TO BACK OFF OF PADDLE.
DUFF-NORTON CO.
WADESBORO, N.C.
WIRING DIAGRAM (208V)
3 SPD HOIST w/ INVERTER
BY: BH
DATE: 7-12-95
983EC710
B/M# W1R633

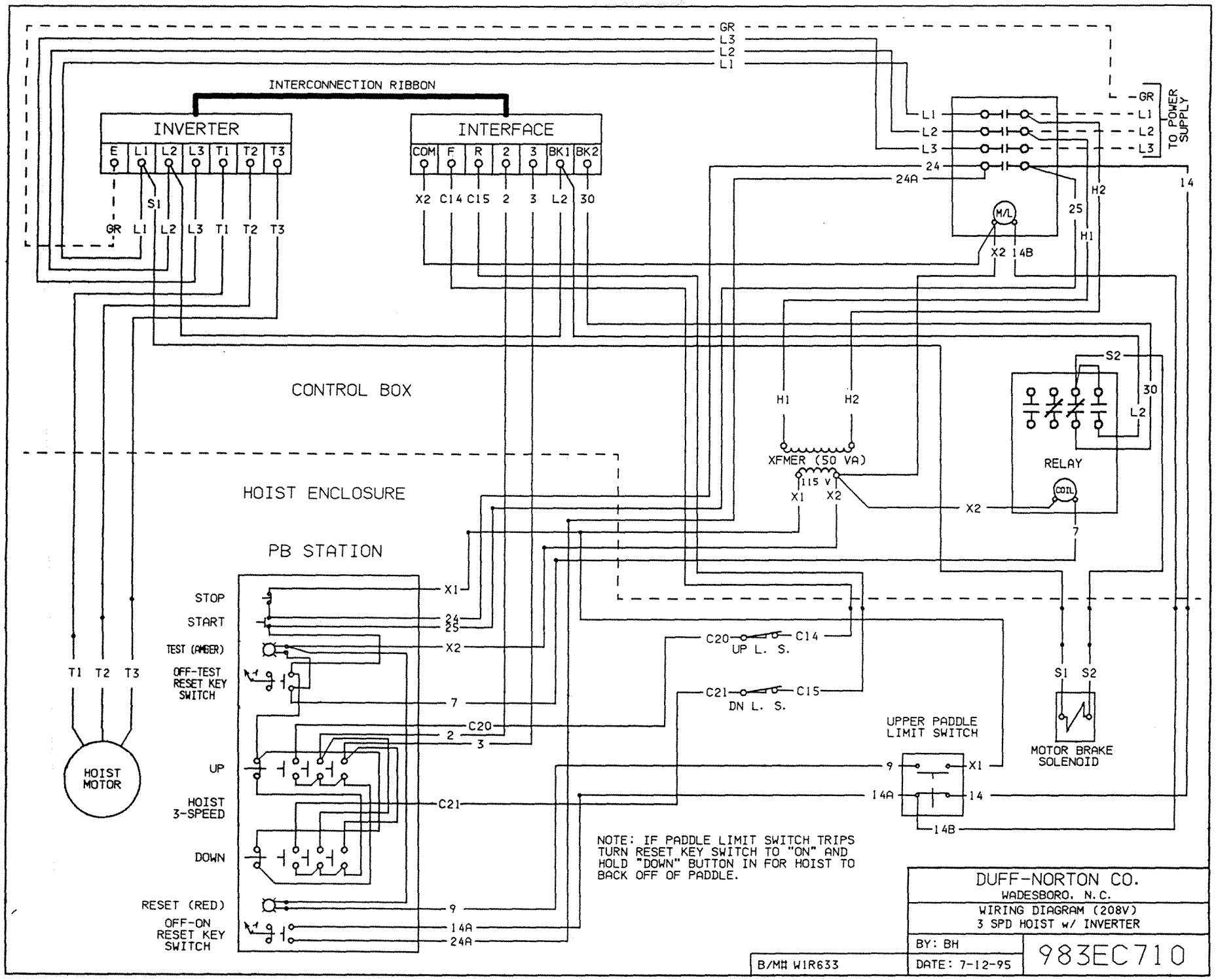
INTERCONNECTION RIBBON
INVERTER
E L1 L2 L3 T1 T2 T3
INTERFACE
COM F R 2 3 BK1 BK2
X2 C14 C15 2 3 L2 30
GR L1 L2 L3 T1 T2 T3
S1
GR
L3
L2
L1
TO POWER SUPPLY
24
24A
M/L
X2 14B
25
H1
H2
14
CONTROL BOX
HOIST ENCLOSURE
PB STATION
H1 H2
XFMER (50 VA)
115 V
X1 X2
RELAY
COIL
S2
30
L2
7
STOP
START
TEST (AMBER)
OFF-TEST RESET KEY SWITCH
UP
HOIST 3-SPEED
DOWN
RESET (RED)
OFF-ON RESET KEY SWITCH
X1
24
25
X2
7
C20
2
3
C21
9
14A
24A
T1 T2 T3
HOIST MOTOR
C20 C14
UP L. S.
C21 C15
DN L. S.
UPPER PADDLE LIMIT SWITCH
9 X1
14A 14
14B
S1 S2
MOTOR BRAKE SOLENOID
NOTE: IF PADDLE LIMIT SWITCH TRIPS TURN RESET KEY SWITCH TO "ON" AND HOLD "DOWN" BUTTON IN FOR HOIST TO BACK OFF OF PADDLE.
DUFF-NORTON CO.
WADESBORO, N.C.
WIRING DIAGRAM (208V)
3 SPD HOIST w/ INVERTER
BY: BH
DATE: 7-12-95
983EC710
B/M# W1R633

CERTIFIED PRINT
SIGNED: ENGINEER
DATE: 7-26-95

WR1A-TVL-2-6

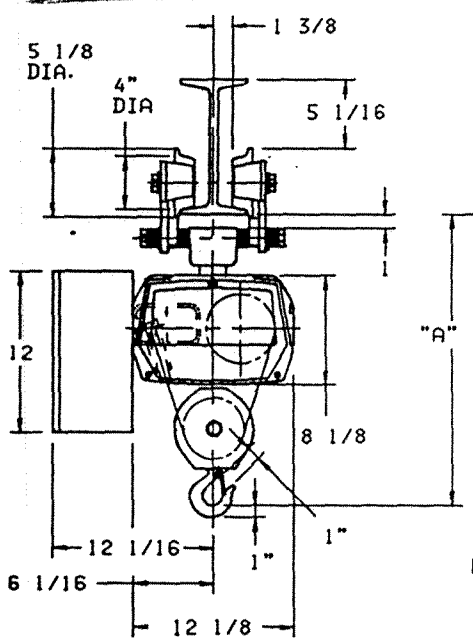

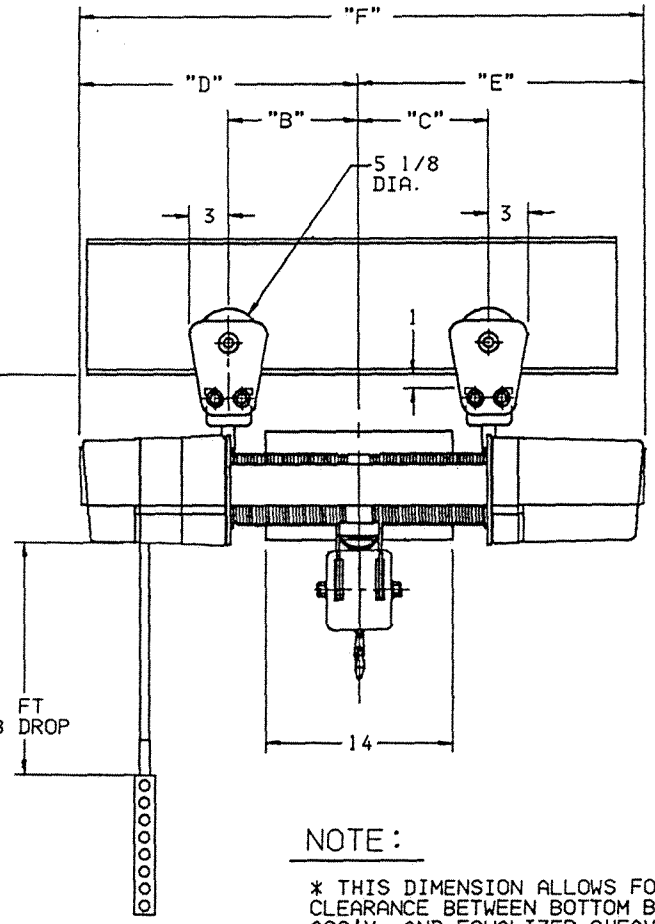

CUSTOMER NAME: DOWNS CRANE.

PO. NO.: 36417

QUANTITY: 2

MODEL NO: WRT2016-7-15TVL

CAPACITY: 2000 LBS

HOIST SPEED: VARIABLE

LIFT: 15 FT

PB STATION: 8 BUTTON PB STATION W/ 11 FT PB DROP

CONTROL VOLTAGE: 115V

SUPPLY VOLTAGE: 208V-3PH-60HZ

SPECIAL FEATURES:
UPPER PADDLE LIMIT SWITCH.
M/L CONTACTOR.
VARIABLE FREQUENCY INVERTER SPEED CONTROL.
SS HOOK.
SS TROLLEY WHEELS.
SS WIRE ROPE.

NOTE:

* THIS DIMENSION ALLOWS FOR A 2" CLEARANCE BETWEEN BOTTOM BLOCK ASS'Y. AND EQUALIZER SHEAVE ASS'Y. & IS BASED ON A S10" @ 35# I-BEAM.

LIFT	"A"	"B"	"C"	"D"	"E"	"F"	REEVING
15 FT.	21 9/16	9 3/4	9 3/4	20 7/8	21 7/16	42 5/16	2 PART-DOUBLE

COFFING® HOIST
DUFF-NORTON CO.
CHARLOTTE, NORTH CAROLINA

WR-1 TRUE VERTICAL LIFT HOIST W/ PLAIN TROLLEY

DRN:TJS | DATE:07-26-95 | SCALE:1/8

WR1A-TVL-2-6

GANTRY CRANE CALCULATIONS

TWO BRACES REQ. , ONE MIDDLE OF COLUMN AND ONE AT FEET

SPAN=	10 FT	WHEEL OFFSET=	2.5 IN
HEIGHT=	11.5 FT		
LOAD=	1 TON		
IMPACT=	15%		

MAIN BEAM INFORMATION		HOIST INFORMATION	
BEAM DESCRIPTION =	S8X18.4	WEIGHT=	256 LBS
HEIGHT=	8 in	DIST FROM EDGE	
AREA=	5.41 IN^2	OF HOIST TO CL OF	
D/Af=	4.7 1/IN	HOOK=	20.875 IN
I=	57.6 IN^4	OTHER SIDE=	21.4375 IN
S=	14.4 IN^3		

MAIN TUBE INFORMATION		SECONDARY TUBE INFORMATION	
TUBE HEIGHT=	3 IN	TUBE HEIGHT=	2 IN
TUBE WIDTH=	3 IN	TUBE WIDTH=	2 IN
TUBE WALL=	0.25 IN	TUBE WALL=	0.1875 IN
AREA=	2.59 IN^2	AREA=	1.27 IN^2
I=	3.16 IN^4	I=	0.668 IN^4
S=	2.1 IN^3	S=	0.668 IN^3

WILL THE MAIN TUBES BE ON THE INSIDE OR THE OUTSIDE? O

NUMBER OF BOLTS PER END FOR ATTACHMENT TO BEAM= 8

BOLT DIA= 0.5 IN

MAX.WHEEL LOAD= 1262 LBS

BEAM CHECK= YES 8946.725 PSI

MAIN TUBE CHECK= YES

KL/R CHECK= YES

CALCULATIONS

SPAN=	120	IN			
HEIGHT=	138	IN			
LOAD=	2300	LBS			
WHEEL SLOPE=	0.25				
LEG BRACE ANGLE=	7	DEGREES			
AREA FOR HEAD(estimate)=	19.84301	IN	19	0.905415	0.875
WHEEL TREAD=	69	IN	69	0.0624	0
ANGLE FOR WHEEL CLIMB CALCULATIONS=	15	DEGREES			
WEIGHTS					
BEAM=	183.9184	LBS			
HOIST=	256	LBS			
MAIN TUBE=	405.0283	LBS			
SEC. TUBE=	198.6046	LBS			
MISC.=	345	LBS			
BEAM MOMENT CALCULATIONS					
SPAN (CL OF MAIN TUBE TO CL OF MAIN TUBE=	80.25				
MAXIMUM LIVE LOAD ON ONE SIDE=	1701.713	LBS			
OTHER=	598.2866	LBS			
MAXIMUM WHEEL LOAD=	1261.995	LBS			
HORIZONTAL FORCE DUE TO CLIMB=	338.1504	LBS			
SINGLE LEG LOAD OF COLUMN					
COLUMN MOMENT=	50919.04	IN-LB	INCREASED SECT=		20.62544
ALLOWABLE=	15333.33	PSI	RATIO=	0.161005	
BENDING STRESS=	2468.749	PSI			
OR	2025.849				
COLUMN COMPRESSIVE LOAD=	1714.493	LBS			
K=	1		k=1 conservative approach		
L=	183.0476		due to L used is twice		
R=	1.104571		the unsupported length		
KL/R=	165.7183				
Cc=	111.554				
Fa1=	-2622.63	PSI			
Fa2=	5437.639	PSI			
ALLOWABLE COMPRESSIVE STRESS=	5437.639	PSI	RATIO=	0.121738	
COMPRESSIVE STRESS=	661.9664	PSI			
		SUM OF RATIOS=		0.282743	
BEAM CALCULATIONS					

CALCULATIONS

MOMENT DUE TO LOAD=	76680	IN-LB	120		
WORST MOMENT CASE OF LEGS=	50919.04	IN-LB			
MOMENT DUE TO WEIGHT OF BEAM=	1233.798	IN-LB			
SUM=	128832.8	IN-LB			
BENDING STRESS=	8946.725	PSI			
ALLOWABLE DUE TO LATERAL=	12000	PSI			
BOLTS					
BOLTS START FROM END=	1.4375	in			
DISTANCE BETWEEN OUTER BOLTS=	17	in			
DISTANCE BETWEEN INNER BOLTS=	5.666667	in			
TENSION LOAD=	2995.238				
BOLT AREA=	0.19635				
ALLOWABLE STRESS GRADE 5=	24000	PSI			
STRESS=	15254.62				

Duff-Norton

P.O. BOX 779
COUNTRY CLUB ROAD
WADESBORO, N.C. 28170

HOIST PLANT (704) 694-2156
FAX (704) 694-6829

CERTIFICATE OF COMPLIANCE

August 8, 1995

Downs Crane & Hoist Co., Inc.
8827 South Juniper Street
Los Angeles, CA 90002

CUSTOMER ORDER NUMBER:	0036416
D/N ORDER NUMBER:	T1369
PART NAME:	HAND HOIST
PRODUCT CODE:	05505,T1369,02
PART NUMBER:	CA1/2S
QUANTITY SHIPPED:	2

This is to certify that the material shipped against the above customer order number and the above Duff-Norton Company order number, has been inspected and accepted as being in compliance with the customer purchase order requirements, Duff-Norton standard production requirements, and is subject to standard warranty against defective material and workmanship. These hoists have been tested at 125% of the rated capacity.

Duff-Norton Company
Wadesboro, North carolina

Joe Martin
Quality Assurance Foreman
Quality Control Department

Duff-Norton

P.O. BOX 779
COUNTRY CLUB ROAD
WADESBORO, N.C. 28170

HOIST PLANT (704) 694-2156
FAX (704) 694-6829

MAGNETIC PARTICLE TEST

AUGUST 8, 1995

Downs Crane & Hoist Co., Inc.
8827 South Juniper Street
Los Angeles, CA 90002

CUSTOMER ORDER NUMBER:	0036416
D/N ORDER NUMBER:	T1369
PART NAME:	HAND HOIST
PRODUCT CODE:	1
PART NUMBER:	CTH3P
QUANTITY SHIPPED:	1

This is to certify that the material shipped against the above customer order number and the above Duff-Norton Company order number, has been inspected and accepted as being in compliance with the customer purchase order requirements, Duff-Norton standard production requirements, and is subject to standard warranty against defective material and workmanship. A magnetic particle test has been performed on the hooks for this hoist.

Duff-Norton Company
Wadesboro, North carolina

Joe Martin

Joe Martin
Quality Assurance Foreman
Quality Control Department

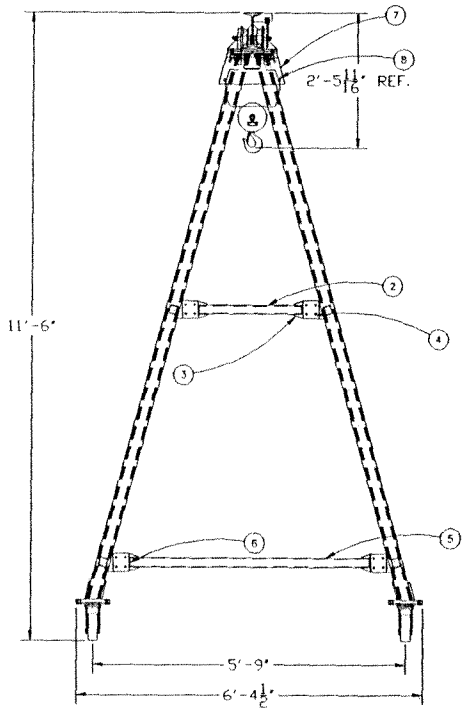

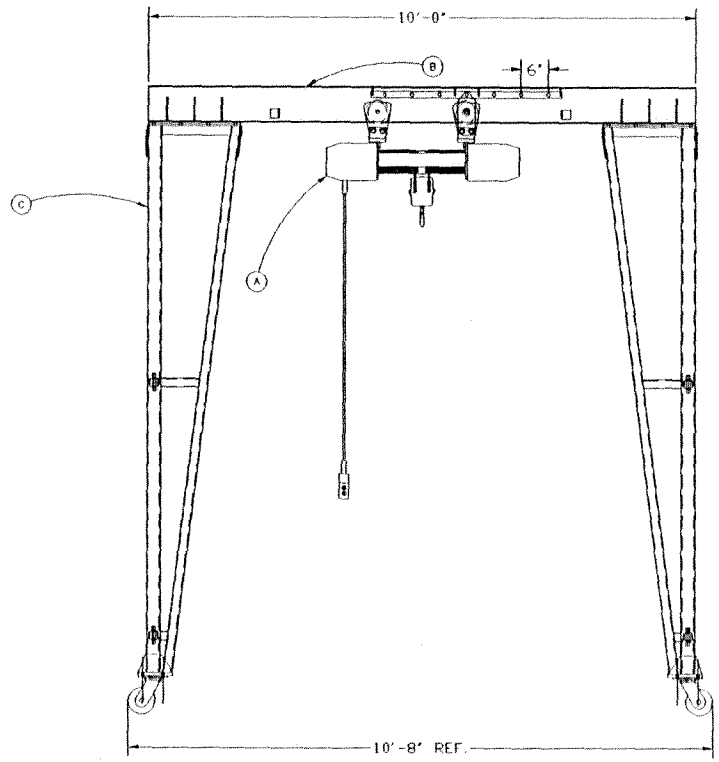

Approved as specified:
A.G. Zorn
8-9-95

DRAWING FOR APPROVAL
GANTRY DIMENSIONAL PRINT

	8	16	JOINER PLATE BOLTS	–	
	7	4	LEG JOINER PLATES	–	
	6	8	BRACE END PLATES	–	
	5	2	LONG BRACE	–	
	4	32	BRACE BOLTS	–	
	3	8	BRACE CONNECTOR	–	
	2	2	MIDDLE BRACE	–	
	1	–	SHORT BRACE	–	–
C	–	2	LEG SUBASSEMBLY	1	
B	–	1	BEAM SUBASSEMBLY	1	
A	–	1	COFFING HOIST	1	
SUB-ASSY	PART NO.	NO. REQD.	BILL OF MATERIAL	SHEET NO.	WEIGHT

GANTRY CRANE
2,000 LB CAPACITY, 10'-0" SPAN
11'-6" TO TOP OF BEAM, LEG REVERSED OUTWARD

EQUIPMENT DESIGN • MANUFACTURING
DOWNS CRANE & HOIST COMPANY
LOS ANGELES, CALIFORNIA

DES. FOR NSI JOB 25900 W.O. 1540
DRN. BY RCV DATE 7\20\95 CH. BY SCALE 1"=1'
SHEET NO. 1 OF 2 A-15 812313
FILE NAME

REVISIONS BY DATE