****
* NSI
*
*Document #40-01-647
****

FAILURE MODES AND EFFECTS ANALYSIS AND OPERATING AND SUPPORT HAZARD ANALYSIS (O&SHA) OF THE DUFF NORTON ONE TON COFFING HOISTS AND GANTRIES LOCATED IN BUILDINGS M-16 AND M-20 WALLOPS FLIGHT FACILITY

NSI Document No.

40-01-647

March 1996

PREPARED BY: Mel Crompton 3·11·96
M. Crompton, Project Engineer, Recertification Support, NSI — Date

APPROVED BY: D. E. Burger for 3/11/96
A. Zorn, Manager, Recertification Support, NSI — Date

APPROVED BY: 3/11/96
S. Chan, RECERT Manager, Code 750, NASA/GSFC — Date

RECERT Support
NSI Technology Services Corporation
A Subsidiary of ManTech International Corporation
Goddard Space Flight Center
Greenbelt, Maryland 20771

TABLE OF CONTENTS

	Page
LIST OF FIGURES	iii
LIST OF TABLES	iii
LIST OF ABBREVIATIONS AND ACRONYMS	iv
SECTION 1 - SUMMARY OF FINDINGS	1
1.1 System Criticality	1
1.2 Mechanical Critical Items	1
1.3 Electrical Critical Items	1
1.4 Critical Flex Hose	1
1.5 Critical Orifices	1
1.6 Critical Filters	1
1.7 Criticality Category 1R Items	2
1.8 Requirements of NSS/GO-1740.9B	2
1.9 Critical Control/Monitor Functions	2
1.10 Sneak Circuits Identified	2
1.11 Recommendations	2
SECTION 2 - SYSTEM SUMMARY	2
2.1 Documentation List	2
2.2 System Description	3
2.2.1 Hoist System	3
2.2.2 Trolley System	4
2.2.3 Crane Control Pendant	4
2.2.4 A-Frame Gantry	4
SECTION 3 - DEFINITIONS AND GROUND RULES	4
3.1 Definitions	4
3.2 Ground Rules	7
SECTION 4 - CRITICALITY ASSESSMENT	8
4.1 Purpose	8
4.2 Criticality Assessment Worksheet	8

SECTION 5 - FAILURE MODES AND EFFECTS ANALYSIS AND CIL . . . 10

5.1 Mechanical FMEA Worksheets and Block Diagrams 10

5.2 Electrical Schematic and FMEA Worksheets 20

5.3 Flex Hose FMEA Worksheets 30

5.4 Orifice FMEA Worksheets 30

5.5 Filter FMEA Worksheets 30

5.6 Requirements of NSS/GO-1740.9B 30

5.7 Critical Items List 30
5.7.1 Critical Item List 30
5.7.2 Critical Item Acceptance Rationale Sheets . . 30

5.8 Risk Assessment 34

SECTION 6 - OPERATING AND SUPPORT HAZARD ANALYSIS (O&SHA) . . 36

6.1 Objectives 36

6.2 O&SHA Worksheets 36

SECTION 7 - CONTROL LOGIC ANALYSIS 49

SECTION 8 - EMERGENCY SAFING ANALYSIS 49

SECTION 9 - SNEAK CIRCUIT ANALYSIS 49

SECTION 10 - RECOMMENDATIONS 49

Attachments:

1. Wallops Flight Facility, 1 Ton Gantry Hoist and Magnetic Calibration Facility Hoist for PEGASUS Project, Engineering Stress Analysis, NSI Document No. 14-11-431, July 1995

LIST OF FIGURES

Figure	Title	Page
1	Duff-Norton One-Ton Coffing Hoist and Gantry - General Arrangement	11
2	General Arrangement Print	12
3	Duff-Norton Co. Wiring Diagram	13
4	Hoist Transmission	14
5	Motor Brake Parts	15
6	Drum Area, True-Vertical Lift Models	16
7	Risk Assessment Matrix	35

LIST OF TABLES

Table	Title	Page
1	Parts List: Hoist Transmission	33

LIST OF ABBREVIATIONS AND ACRONYMS

AGMA	American Gear Manufacturers Association
CAT	Category
CIL	Critical Items List
CMAA	Crane Manufacturers Association of America, Inc.
F/H	Flight Hardware
FMEA	Failure Modes and Effects Analysis
GSE	Ground Support Equipment
NASA	National Aeronautics and Space Administration
NFPA	No. 70, National Electric Code
NHB	NASA Handbook
NSTS	National Space Transportation System
OEM	Original Equipment Manufacturer
O&SHA	Operating and Support Hazard Analysis
REV.	Revision
SAA	System Assurance Analysis
SFP	Single Failure Point
SHA	System Hazard Analysis
WFF	Wallops Flight Facility

SECTION 1 - SUMMARY OF FINDINGS

1.1 System Criticality

The Duff-Norton one-ton Coffing hoists and associated gantries (two identical hoist and gantry systems), located in Buildings M-16 and M-20 at the Wallops Flight Facility, is assessed as critical due to its direct interface with flight hardware (F/H).

1.2 Mechanical Critical Items

There is one Category 2 mechanical Critical Item identified in Section 5 of this analysis. This item is summarized below. See Sections 5.1, 5.7, and 5.8 for additional information. Section 3 defines the criticality categories.

Part Name	Critical Failure Mode	Criticality Category
Hoist Transmission	Transmission disengages due to structural failure, i.e., broken gear teeth	2

NOTE:

Gear boxes, speed reducers, and couplings are considered Single Failure Points if they are located between the drum and the nearest brake, in accordance with NSTS 22206, Revision D. Rationale for acceptance of the critical item is provided in Section 5.7.2. Analysis determined the following risk acceptance parameters:

Hazard Severity Level --- Catastrophic
Likelihood ---------- Remote
Risk Assessment --------- Acceptable Risk (Uncertainties Controlled/Managed)

1.3 Electrical Critical Items

There are no Critical electrical items associated with the one-ton Coffing hoist.

1.4 Critical Flex Hose

There are no flex hoses associated with this equipment.

1.5 Critical Orifices

There are no orifices associated with this equipment.

1.6 Critical Filters

There are no filters associated with this equipment.

1.7 Criticality Category 1R Items

There were no Criticality IR items identified in the critical output functions in Section 4.

1.8 Requirements of NSS/GO-1740.9B

NSTS 22206, Revision D, requires that noncompliance to the requirements of NSS/GO-1740.9B, "NASA Safety Standard for Lifting Devices and Equipment," be identified in the FMEA. This FMEA concluded that the Duff-Norton one-ton Coffing hoist is in compliance with the requirements of NSS/GO-1740.9B.

1.9 Critical Control/Monitor Functions

There are no control/monitor functions associated with this equipment.

1.10 Sneak Circuits Identified

There was no Sneak Circuit Analysis performed for this system since a single control system is in place, i.e., the hoisting system.

1.11 Recommendations

Recommendations resultant from the performance of the FMEA and the O&SHA relate to the following areas:

Paragraph

- Test and Inspection
- Operations
- Procedures
- LDE Critical Lift Operator training
- Analysis update, and
- Analysis integration with the SHA

A summary of these recommendations is provided in Section 10.

SECTION 2 - SYSTEM SUMMARY

2.1 Documentation List

The following documents were used in completing this analysis:

Document	Rev.	Title
NSS/GO-1740.9	B	NASA Safety Standard for Lifting Devices and Equipment
NSTS 22206	D	Requirements for Preparation and Approval of Failure Modes and Effects Analysis (FMEA) and Critical Items List (CIL)

Document	Rev.	Title
WR-1 Series Publication Part No. WR-1-680-1		Duff-Norton/Coffing Hoists Operating and Maintenance Instructions with parts lists
Downs Crane & Hoist Company		Dimensional Print
Downs Crane & Hoist Company		Gantry Crane Calculations
NHB 1700.1(V1-B)		NASA Safety Policy and Requirements Document
RECERT-42-011		A Standard Operating Procedure for Preparation of a Request for a Waiver/Deviation to the Mandatory Requirements of NSS/GO-1740.9B, "NASA Safety Standard for Lifting Devices and Equipment"
NSI Procedure No. 44-06-444, October 1995		Test and Inspection Procedure for Gantry, Electric Wire Rope Hoist, Manual Trolley, Gantry No. M-16-1
NSI Report No. 44-06-444 October 1995		Appendix I, Periodic Test and Inspection Report for Gantry, Electric Wire Rope Hoist, Manual Trolley Crane

2.2 System Description

The Duff-Norton one-ton Coffing Hoist lifting systems, located in Buildings M-16 and M-20 at the Wallops Flight Facility, consists of three major subsystems: an electric hoist, manually operated trolley, and an A-Frame (gantry) which supports the hoist and allows lifting and positioning of Critical flight hardware.

2.2.1 Hoist System

These hoist/gantry systems are cleanroom compatible. The hoist system is equipped with a motor suitable for A.C. inverter duty at 200 volt, 3ϕ 60 Hertz. An Electromotive Impulse P3 adjustable frequency motor control provides the capability for three up/down speed positions. The hoist also includes a transmission and two means of braking: an electro-mechanical disc brake and a mechanical load brake. The electro-mechanical disc brake is equipped with an over-ride switch to facilitate load testing of the mechanical load brake. Each method of

braking is capable of bringing a rated load to zero speed and holding it, with or without power.

The hoist is equipped with two upper limit switches, a geared upper/lower limit switch, and a paddle type final upper limit switch, wired in accordance with Paragraph 201.g.(9) of NSS/GO-1740.9B.

2.2.2 Trolley System

The one-ton gantry hoist is equipped with a push-pull type trolley. The operator must remove a retaining pin and pull the trolley in the required direction. The trolley will normally be pinned in the center of the gantry. The pinning prevents any unplanned motion of the trolley during hoisting operations.

2.2.3 Hoist Control Pendant

The one-ton hoist is controlled from a hand held pendant control station. The four-button pendant provides for: 1) Emergency Stop; 2) Reset, 3) three position up, 4) three position down. The operator selects the required speed by pressing the control button to its first detent for slow speed and to its final detent for high speed. The pendant also contains a keyed reset switch, which bypasses the upper hoist limit switch.

2.2.4 A-Frame Gantry

The one-ton steel gantry is designed and constructed in accordance with the standards and practices referred to in OSHA 29 CFR 1910.179 and ANSI/ASME B30.2-1990 and ANSI/ASME B30.17-1992. The gantry span is 10' with a fixed 11'-6" beam height. The standard I-beam is provided with pinned trolley positions at 6" spacing, 2' either side of center. The gantry is provided with four-position swivel lock casters and polyurethane wheels.

The gantry is fitted with a shunt trip, lockable disconnect sized for the hoist drive system. A cable hanger is provided to contain the 50' power cord. The power cord is connected to a lockable shunt trip disconnect and the other end provided with a 440 V plug.

SECTION 3 - DEFINITIONS AND GROUND RULES

3.1 Definitions

These definitions are necessary to an understanding of the ground rules contained in this document.

<u>Component</u> - A combination of parts, devices, and structures, usually self contained, which perform a distinctive function in the operation of the overall equipment. A "black box"

(e.g., transmitter, power supply, cryogenic pump, filter assembly).

Correcting Action - An identification of actions, automatic or manual, which could be taken to mitigate the effect of failure.

Critical Item - A critical item is defined as any one of the following:

1. A Criticality Category 1, 1S, or 2 are Single Failure Points.
2. A redundant hardware item where the second failure results in loss of life or vehicle and the item is not capable of checkout during normal ground operations (i.e., a single fault tolerant item which fails Redundancy Screen A).

Critical Items List (CIL) - The CIL represents an analysis of the hardware design, highlighting those items which do not meet the requirements of the applicable codes and standards.

Critical System - A system is assessed as critical if loss of overall system function or improper performance of a system function could result in personnel injury or loss of life, damage or loss of flight hardware or facilities.

Criticality - The relative measure of the consequences of a failure mode.

Criticality Categories

Criticality	Potential Effect or Failure
1	Single failure which could result in loss of life or flight hardware.
1R	Two redundant hardware items, which if both failed, could result in loss of life or flight hardware (or loss of a safety or hazard monitoring system).
1S	Single failure in a safety or hazard monitoring system that could cause the system to fail to detect, combat, or operate when needed during the existence of a hazardous condition and could result in loss of life or flight hardware.
2	Single failure which could result in loss (damage) of a flight hardware system or personnel injury.
3	All others.

Criticality Assessment - An analysis of each system function to determine if loss or improper performance of the function could result in loss of life/injury and/or damage to flight hardware or facilities.

Fail Safe - The ability to sustain a failure without causing loss of load or damage to the load. (Includes the capability to safe the lifting device and successfully terminate operations.)

Failure - The inability of a system, subsystem, component, or part to perform its required function within specified limits, under specified conditions for a specified duration.

Failure Mode - A description of the manner in which an item can fail.

Function - The activity or operation that a part, component, or system must perform to accomplish its intended purpose.

Hazard - Existing or potential condition that can result in or contribute to a mishap.

Hazard Report Status -

1. Closed - Corrective action/evaluation has been completed. Requirements have been identified and closed loop control is established. Governing procedural controls are in place. In case of hazards which document design deficiencies, the modification has been completed, the modified system configuration has been verified, and the certification has been documented.

2. Open - Corrective measurement/procedural hazard controls are not in place, or evaluation is pending.

Interface - The point or area where a relationship exists between two or more parts, systems, programs, persons, or procedures wherein physical and/or functional compatibility is required.

Loss of Lifting Device - Loss of the capability to provide the level of device performance required for normal or emergency operations.

Passive Component - A component that may be necessary to the performance or structural integrity of the system but has no active function.

Redundancy - Multiple ways of performing a function.

1. Operational Redundancy - Redundant elements, all of which are fully energized during the subsystem operating cycle. Operational redundancy includes load sharing redundancy wherein redundant elements are connected in such a manner that, upon failure of one unit, the remaining redundant

elements will continue to perform the subsystem function. Switching out the failed element is not required.

2. Standby Redundancy - Redundant hardware items that are nonoperative until they are switched into the subsystem upon failure of the primary items. Switching can be accomplished by either automatic or manual means.

3. Like Redundancy - Identical hardware items performing the same function.

4. Unlike Redundancy - Nonidentical hardware items performing the same function. Safety features which provide protection for specific failure modes are considered as unlike redundancy for that failure mode; i.e., relief valves which provide protection against overpressurization after failure of a regulator.

Safety or Hazard Monitoring System - A system whose function is to detect or combat a hazardous situation which has occurred because of prior failures or events during hazardous operations.

Single Failure Point (SFP) - A single item of hardware, the failure of which could result in loss of life or damage to a flight hardware system.

Variance - Documented and approved permission to perform some act contrary to established requirements.

Waiver - A variance that authorizes departure from a particular safety requirement, where an increased level of risk has been accepted.

3.2 Ground Rules

The analysis shall assess all active components between the load hook and the nearest brake since failure of these components could result in dropping the load. The following ground rules shall be used:

3.2.1 If the hoist has only one brake, the brake shall be identified as a Single Failure Point and the criticality shall be assigned based on the worst-case effect of its failure. An eddy current brake shall not be considered capable of holding the load. See Paragraph 5.6.1 reference: manually operated (nonpowered), off-the-shelf OEM type hoists.

3.2.2 For shafts located between the drum and brake, the method of shaft attachment shall be analyzed. If the shaft is welded or physically attached to the drum by a method approved by hoisting standards, then the shaft attach points shall be considered passive.

3.2.3 Bearings on drums and shafts shall be analyzed only to determine if the bearings can fail and drop the load.

3.2.4 Gear boxes, speed reducers, and couplings shall be considered Single Failure Points if they are located between the drum and nearest brake.

3.2.5 Redundant items with control circuitry must be analyzed to determine if a single credible failure can affect the controls for both redundant components.

3.2.6 A single limit switch on the trolley or bridge drive shall not be identified as a SFP if there is also an acceptable mechanical stop.

3.2.7 Non-compliance to the requirements of NSS/GO-1740.9, "NASA Safety Standard for Lifting Devices and Equipment," shall be identified in the FMEA.

3.2.8 Passive components will not be analyzed in the FMEA. The current list of passive components includes the hook, load block, wire rope, sheaves, and rope drum. However, the drum shafts shall be analyzed as to the attachment method.

3.2.9 Document worst case failure effects for every identified failure mode.

SECTION 4 - CRITICALITY ASSESSMENT

4.1 Purpose

The purpose of a lifting system criticality assessment is to assess each subsystem function to determine if loss or improper performance of the function could result in loss of life and/or load or damage to the lifting system. The assessment is performed without regard to redundancy. System functions are identified as either critical or noncritical.

4.2 Criticality Assessment Worksheet

The Duff-Norton one-ton Coffing hoist subsystems are assessed on the following Criticality Assessment Summary Sheet.

SYSTEM CRITICALITY ASSESSMENT SUMMARY WORKSHEET

LIFT SYSTEM: DUFF-NORTON ONE-TON COFFING HOIST AND GANTRY

LOCATION: BUILDING M-16

PREPARED BY: M. CROMPTON

DATE: NOVEMBER 1995

SUBSYSTEM	FUNCTION	TIME PERIOD	EFFECT OF LOSS/FAILURE	CRITICALITY CATEGORY	NOTE
ELECTRICAL POWER, - 230 VOLTS - 3 PHASE - 60 HERTZ	SUPPLIES POWER TO OPERATE MOTOR AND BRAKE FOR HOIST SYSTEM	PRELAUNCH PROCESSING	ALL HOIST MOTION WOULD STOP, ALL HOIST SYSTEM BRAKES WOULD ENGAGE AND HOLD LOAD. DELAY IN PROCESSING OPERATIONS.	C	
CONTROLS UP/DOWN (HOIST)	OPERATES HOIST IN SPECIFIED DIRECTION	PRELAUNCH PROCESSING	UNABLE TO RAISE/ LOWER LOAD AS REQUIRED. POSSIBLE DAMAGE TO FLIGHT HARDWARE DUE TO IMPROPER FUNCTION. DELAY IN PROCESSING OPERATIONS.	C	
E-STOP/OFF	PROVIDES EMERGENCY STOP CAPABILITY	PRELAUNCH PROCESSING	UNABLE TO STOP HOIST MOTION IN THE EVENT OF AN EMERGENCY. POSSIBLE INJURY TO PERSONNEL AND DAMAGE TO FLIGHT HARDWARE.	C	
GANTRY	SUPPORTS 1-TON COFFING HOIST	PRELAUNCH PROCESSING	FAILURE OF THE GANTRY COULD CAUSE DAMAGE TO FLIGHT HARDWARE AND PERSONNEL INJURY.	C	FMEA NOT REQUIRED PER NSTS 22206. SEE OPERATING AND SUPPORT HAZARD ANALYSIS (ATTACHED).
OUTPUT HOIST MOTION (UP/DOWN)	RAISE/LOWER AND POSITION LOAD	PRELAUNCH PROCESSING	A CATASTROPHIC FAILURE OF THE HOIST SYSTEM COULD CAUSE DAMAGE TO FLIGHT HARDWARE.	C	REQUIRES MULTIPLE FAILURES.

C = Critical
NC = Not Critical

SECTION 5 - FAILURE MODES AND EFFECTS ANALYSIS AND CIL

5.1 Mechanical FMEA Worksheets and Block Diagrams

The mechanical components of the subsystems documented in Section 4 were identified from the documents and diagrams referenced in the Documentation List. An analysis of these components was performed and documented on the following FMEA worksheets. A current list of passive components follows:

Passive Components

- Hook
- Load Block
- Wire Rope
- Sheaves
- Drum
- Structural components are not analyzed as part of this analysis. Such items that constitute a safety concern shall be considered in the Operating and Support Hazard Analysis.

Shafts, bearings, gear boxes, and couplings are analyzed in accordance with the Ground Rules defined in Section 3.2. Figures 4 through 6 are included herein to support this latter analysis.

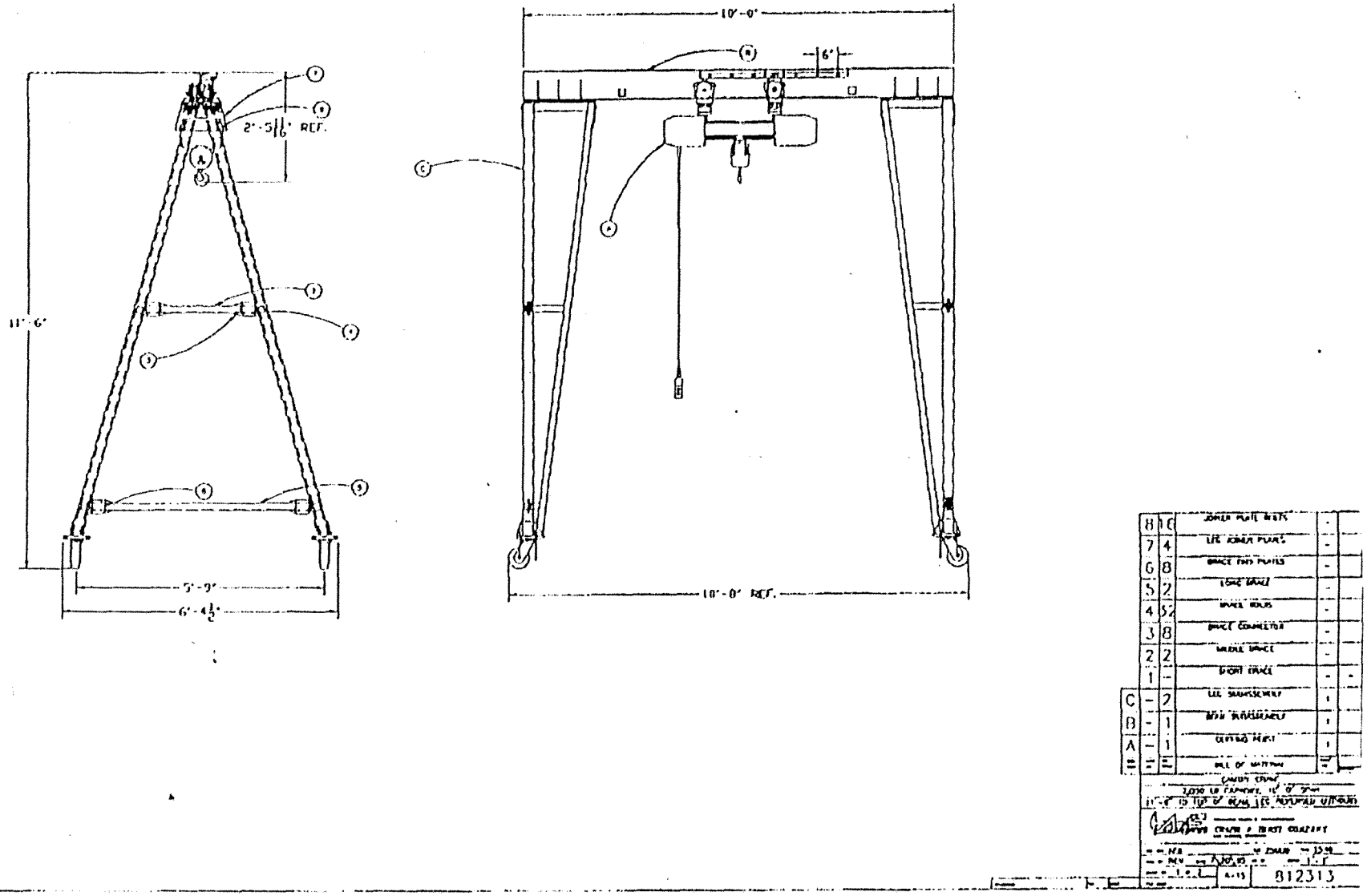

FIGURE 1
DUFF-NORTON ONE-TON COFFING HOIST AND GANTRY
GENERAL ARRANGEMENT

CERTIFIED PRINT
SIGNED [illegible] ENGINEER
DATE: 2-26-95

WR1A-TVL-2-6

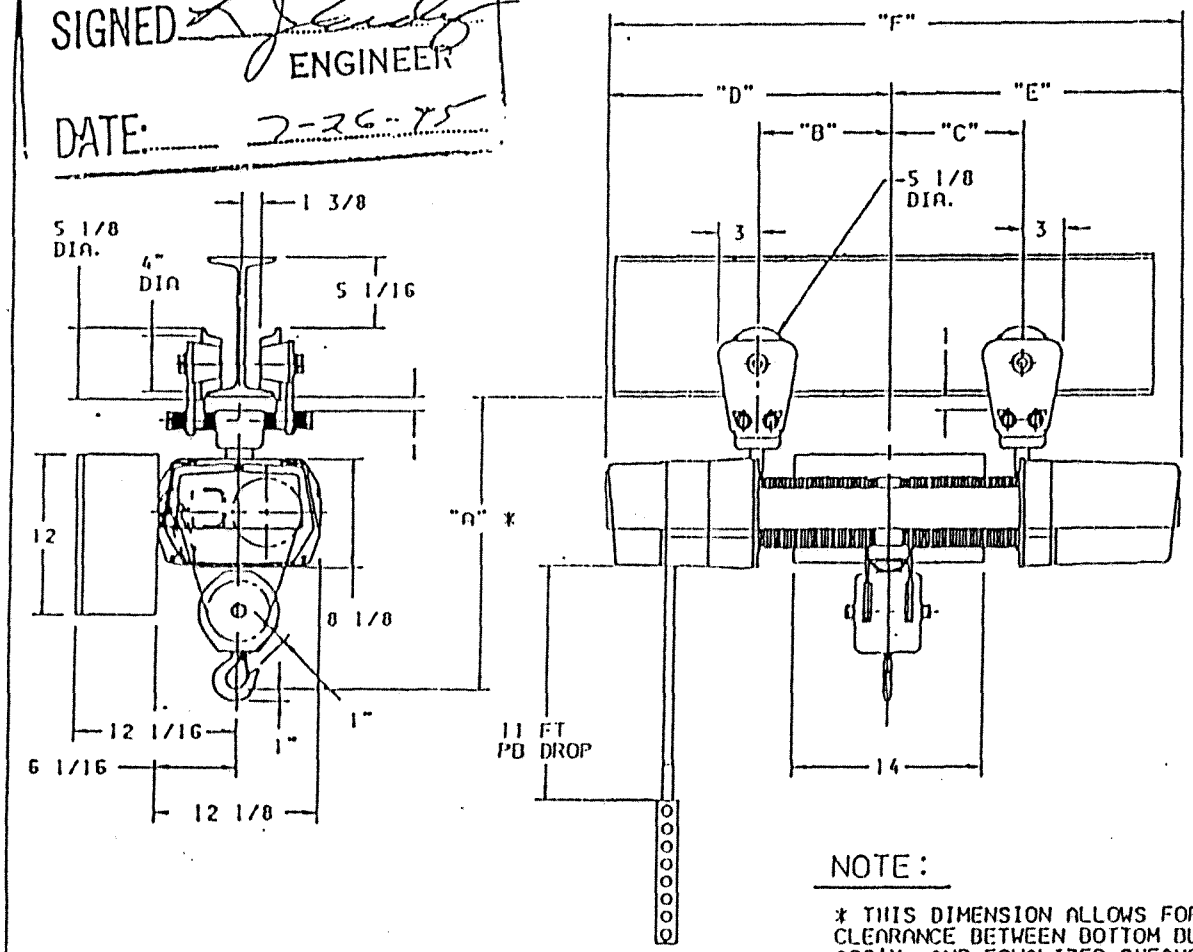

CUSTOMER NAME: DOWNS CRANE.
PO. NO.: 36417
QUANTITY: 2
MODEL NO: WRT2016-7-15TVL
CAPACITY: 2000 LBS
HOIST SPEED: VARIABLE
LIFT: 15 FT
PB STATION: 8 BUTTON PB STATION W/ 11 FT PB DROP
CONTROL VOLTAGE: 115V
SUPPLY VOLTAGE: 208V-3PH-60HZ

SPECIAL FEATURES:
UPPER PADDLE LIMIT SWITCH.
H/L CONTACTOR.
VARIABLE FREQUENCY INVERTER SPEED CONTROL.
SS HOOK.
SS TROLLEY WHEELS.
SS WIRE ROPE.

NOTE:
* THIS DIMENSION ALLOWS FOR A 2" CLEARANCE BETWEEN BOTTOM BLOCK ASS'Y. AND EQUALIZER SHEAVE ASS'Y. & IS BASED ON A S10" @ 35# I-BEAM.

LIFT	"A"	"B"	"C"	"D"	"E"	"F"	REEVING
15 FT.	21 9/16	9 3/4	9 3/4	20 7/8	21 7/16	42 5/16	2 PART-DOUBLE

COFFING® HOIST
DUFF-NORTON CO.
CHARLOTTE, NORTH CAROLINA

WR-1 TRUE VERTICAL LIFT HOIST W/ PLAIN TROLLEY

DRN: TJS | DATE: 01-26-95 | SCALE: 1/8

WR1A-TVL-2-6

FIGURE 2 - GENERAL ARRANGEMENT PRINT

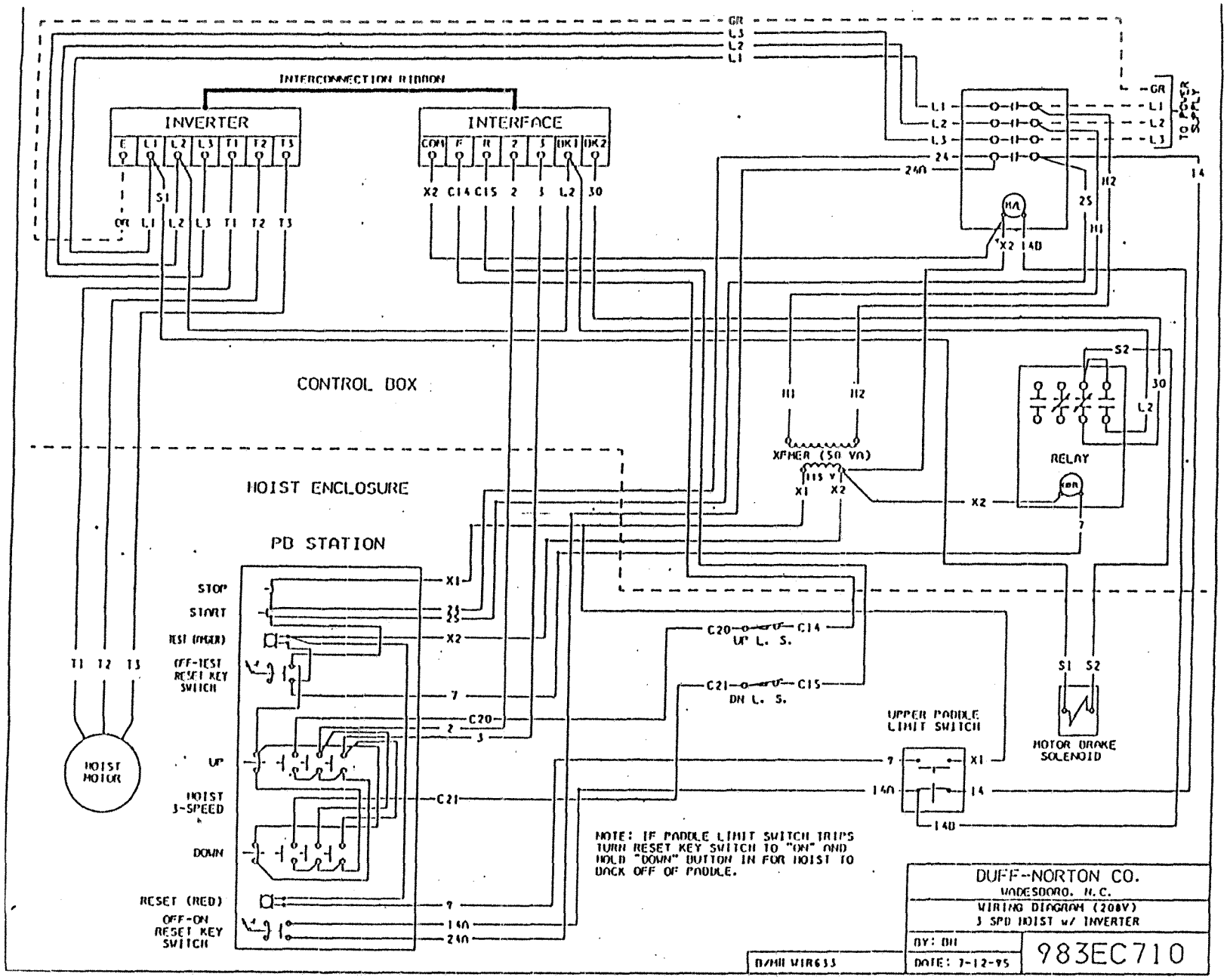

FIGURE 3: DUFF-NORTON CO. WIRING DIAGRAM

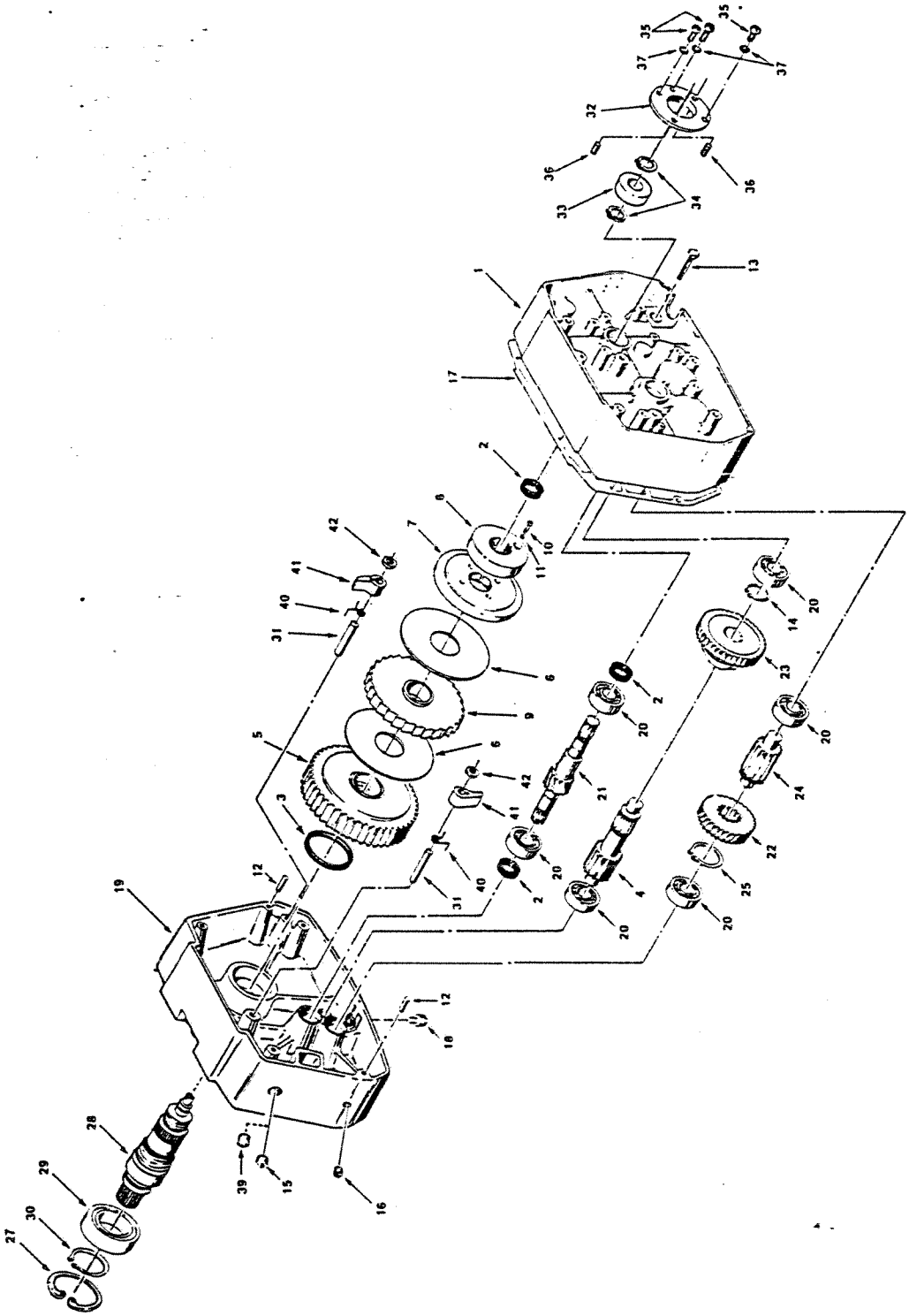

FIGURE 4 - HOIST TRANSMISSION

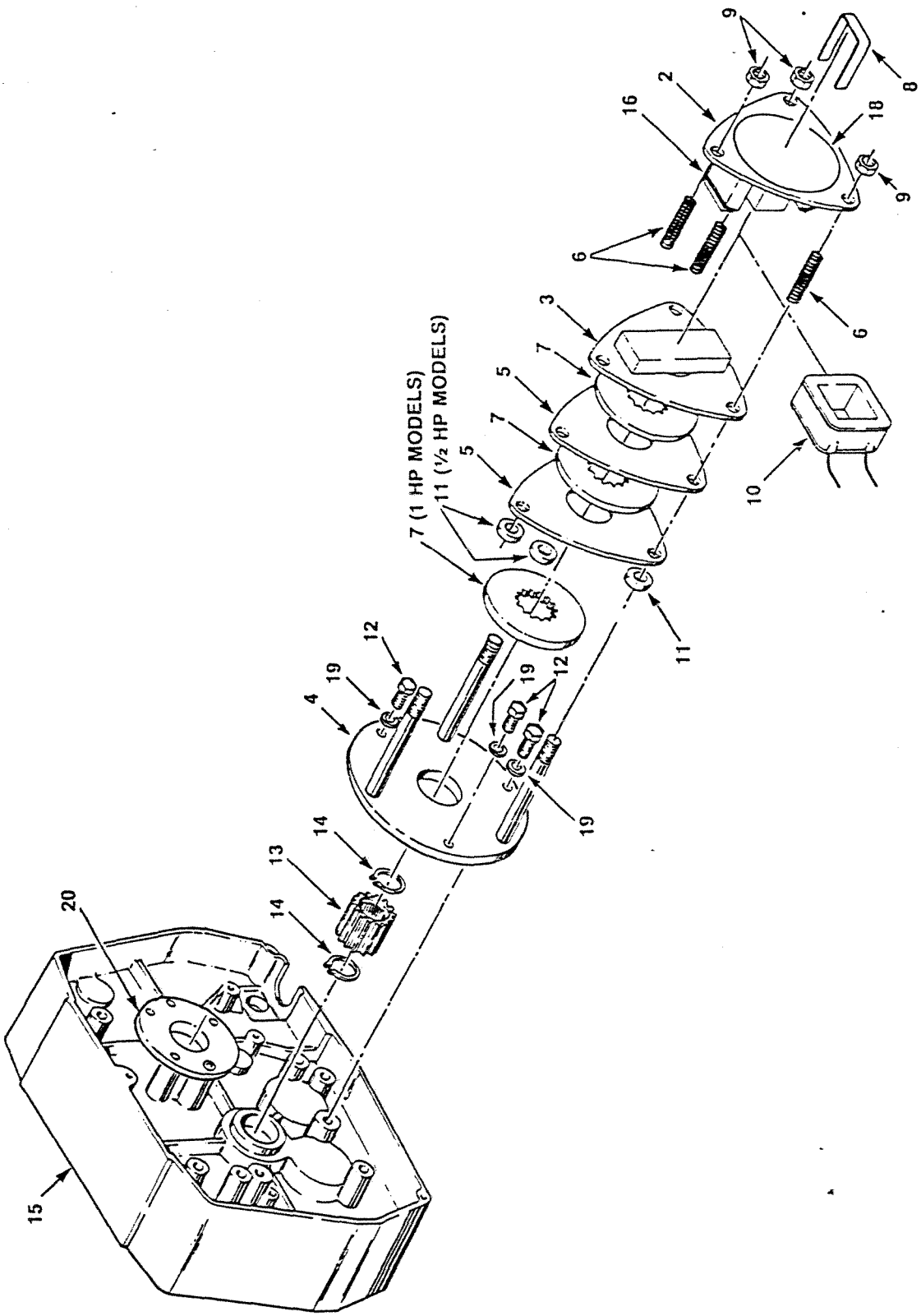

FIGURE 5 - MOTOR BRAKE PARTS

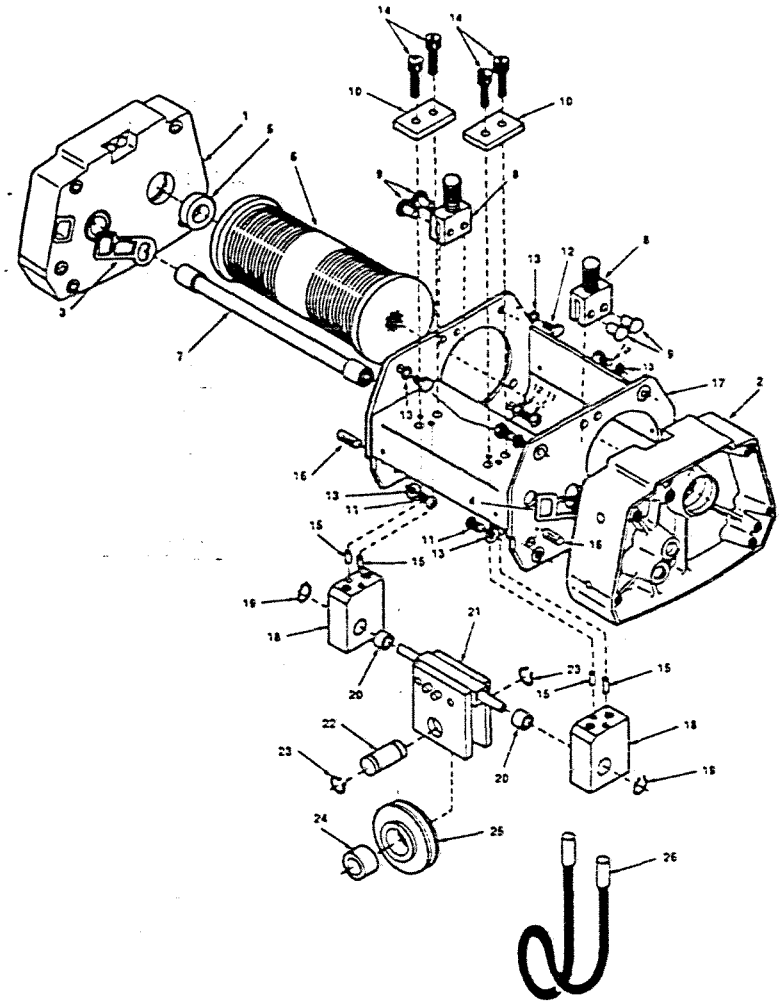

Index No.	Part Name	Part No.
1	Motor Adaptor:	
	½ HP	39J3-1
	1 HP	39J3
2	Transmission Housing	35JG6
3	Gasket	560J12-1
4	Gasket	560J12-2
5	Bearing	500K12
6	Drum Assembly:	
	15 ft. Lift	16JG13-3
	30 ft. Lift	16JG13-7
7	Drive Coupling:	
	15 ft. Lift	107JG7-3
	30 ft. Lift	107JG7-7
8	Suspension Lug	50J48
9	Clevis Pin	103J10
10	Support Plate	296J9
11	Screw	H-1108P
12	Screw	S-44-21
13	Lock Washer	H-4066-P

Index No.	Part Name	Part No.
14	Screw	S-49-19
15	Pin	H-5210
16	Pin	H-5230-5
17	Suspension Assembly:	
	15 ft. Lift	33JG25-1
	30 ft. Lift	33JG25-2
18	Pillow Block	503J8
19	Retaining Pins	H-5528
20	Bushing	SK-6415-96
21	Equalizer Sheave Assembly	
	(Includes Index No. 22-25)	113JG2
22	Sheave Pin	122J20
23	Retaining Ring	H-5527
24	Bushing	MA-532
25	Sheave	28J16
26	Wire Rope Assembly:	
	15 ft. Lift	19J303
	30 ft. Lift	19J305

FIGURE 6 - DRUM AREA, TRUE-VERTICAL LIFT MODELS

FAILURE MODE AND EFFECTS ANALYSIS (FMEA) WORKSHEET

SYSTEM: BUILDING M-16
SUBSYSTEM: DUFF-NORTON ONE-TON COFFING HOIST, MECHANICAL

DATE: NOVEMBER 1995
PREPARED BY: M. CROMPTON
D. GAYO

PART NO.	PART NAME	PART FUNCTION	A. FAILURE MODE B. CAUSE C. DETECTION METHOD D. CORRECTING ACTION E. TIME TO EFFECT	FAILURE EFFECT ON SYSTEM PERFORMANCE	FAILURE EFFECT ON CRITICAL HARDWARE AND/OR PERSONNEL SAFETY	CRIT CAT
P/N N.A	HOIST TRANSMISSION	PROVIDES MECHANICAL LINKAGE/ ADVANTAGE BETWEEN THE HOIST MOTOR AND THE WIRE ROPE DRUM	A1. DISENGAGES B1. BROKEN TEETH C. BINDING AND NOISY OPERATION D. N/A E. IMMEDIATELY	CATASTROPHIC FAILURE OF THE HOIST TRANSMISSION WILL ALLOW THE LOAD TO DROP	LOAD WILL DROP, COULD CAUSE DAMAGE OR LOSS OF FLIGHT HARDWARE	2
			A2. GEARS LOCK UP B2. LACK OF LUBRICATION, EXCESSIVE WEAR	HOIST SYSTEM INOPERATIVE	DELAY FOR REPAIRS	3
	MULTIPLE DISC MOTOR BRAKE	PROVIDES TORQUE FOR STOPPING AND HOLDING LOAD WHEN POWER IS REMOVED	A1. FAILS TO ENGAGE B1. EXCESSIVE WEAR OF FRICTION MATERIAL	NONE, MECHANICAL LOAD BRAKE WILL STOP AND HOLD LOAD, REQUIRES MULTIPLE FAILURES	DELAY FOR REPAIRS	3
			A2. FAILS TO DISENGAGE B2. INTERNAL PARTS FAILURE	HOIST SYSTEM INOPERATIVE	DELAY FOR REPAIRS	3

FAILURE MODE AND EFFECTS ANALYSIS (FMEA) WORKSHEET

SYSTEM: BUILDING M-16
SUBSYSTEM: DUFF-NORTON ONE-TON COFFING HOIST, MECHANICAL

DATE: NOVEMBER 1995
PREPARED BY: M. CROMPTON
D. GAYO

PART NO.	PART NAME	PART FUNCTION	A. FAILURE MODE B. CAUSE C. DETECTION METHOD D. CORRECTING ACTION E. TIME TO EFFECT	FAILURE EFFECT ON SYSTEM PERFORMANCE	FAILURE EFFECT ON CRITICAL HARDWARE AND/OR PERSONNEL SAFETY	CRIT CAT
P/N N.A	MECHANICAL LOAD BRAKE	PROVIDES REDUNDANT BRAKING ABILITY TO THE HOIST SYSTEM. ALSO AIDS IN CONTROL LOAD DURING LOWERING OPERATIONS	A1. FAILS TO ENGAGE. B1. WORN FRICTION MATERIAL	NONE. MULTIPLE DISC MOTOR BRAKE WILL STOP AND HOLD LOAD. REQUIRES MULTIPLE FAILURES.	DELAY FOR REPAIRS	3
			A2. FAILS TO DISENGAGE. B2. INTERNAL PART FAILURE	POSSIBLE DAMAGE TO MICRO MOTOR.	DELAY FOR REPAIRS.	3
	OVERLOAD LIMITING CLUTCH	PROVIDES PROTECTION AGAINST LIFTING A LOAD GREATER THAN THE ONE-TON RATED LOAD CAPACITY	A1. FAIL TO ENGAGE B1. INTERNAL PART FAILURE	UNABLE TO LIFT LOAD. HOIST SYSTEM INOPERATIVE.	DELAY FOR REPAIRS.	3
			A2. FAILS TO SLIP B2. INTERNAL PART FAILURE	LOSS OF PROTECTION AGAINST LIFTING LOAD THAT IS PAST HOIST LOAD LIMIT. POSSIBLE DAMAGE TO HOIST IF LOAD IS PAST RATED LIMIT.	DELAY FOR REPAIR.	3

FAILURE MODE AND EFFECTS ANALYSIS (FMEA) WORKSHEET

SYSTEM: BUILDING M-16
SUBSYSTEM: DUFF-NORTON ONE-TON COFFING HOIST, MECHANICAL

DATE: NOVEMBER 1995
PREPARED BY: M. CROMPTON
D. GAYO

PART NO.	PART NAME	PART FUNCTION	A. FAILURE MODE B. CAUSE C. DETECTION METHOD D. CORRECTING ACTION E. TIME TO EFFECT	FAILURE EFFECT ON SYSTEM PERFORMANCE	FAILURE EFFECT ON CRITICAL HARDWARE AND/OR PERSONNEL SAFETY	CRIT CAT
	COUPLING	PROVIDES MECHANICAL LINKAGE BETWEEN HOIST MAIN MOTOR AND HOIST TRANSMISSION	A1. FAILS STRUCTURALLY B1. OVERSTRESS	HOIST SYSTEM INOPERATIVE. ELECTRO-MECHANICAL BRAKE #1 AND #2 WILL STOP AND HOLD LOAD.	DELAY FOR REPAIRS, REQUIRES MULTIPLE FAILURES.	3

5.2 Electrical Schematic and FMEA Worksheets

The electrical components of the critical output functions, identified in Section 4, were identified from the documents and diagrams referenced in the Documentation List and are analyzed on the following FMEA Worksheets: Subsystem - Hoist, Electrical.

FAILURE MODE AND EFFECTS ANALYSIS (FMEA) WORKSHEET

SYSTEM: BUILDING M-16
SUBSYSTEM: DUFF-NORTON ONE-TON COFFING HOIST, ELECTRICAL

DATE: NOVEMBER 1995
PREPARED BY: M. CROMPTON
D. GAYO

PART NO.	PART NAME	PART FUNCTION	A. FAILURE MODE B. CAUSE C. DETECTION METHOD D. CORRECTING ACTION E. TIME TO EFFECT	FAILURE EFFECT ON SYSTEM PERFORMANCE	FAILURE EFFECT ON CRITICAL HARDWARE AND/OR PERSONNEL SAFETY	CRIT CAT
	HOIST MOTOR	PROVIDES MOTIVE FORCE TO HOIST SYSTEM REQUIRED TO LIFT/LOWER LOAD IN THREE AVAILABLE MOTOR SPEEDS.	A1. FAILS TO OPERATE B1. INTERNAL PART FAILURE	HOIST INOPERATIVE. MECHANICAL LOAD BRAKE WILL HOLD THE LOAD.	DELAY FOR REPAIRS REQUIRES MULTIPLE FAILURES	3
			A2. FAILS DURING OPERATION B2. INTERNAL PART FAILURE	HOIST INOPERATIVE. MECHANICAL LOAD BRAKE WILL HOLD THE LOAD.	DELAY FOR REPAIRS REQUIRES MULTIPLE FAILURES	3
UP	CONTACT, N.O.	WHEN ENERGIZED, CONTACT CLOSES PROVIDES CIRCUIT TO ENERGIZE HOIST MOTORS IN THE UP DIRECTION OF TRAVEL.	A1. FAILS CLOSED B1. INTERNAL PART FAILURE	HOIST WILL CONTINUE TO OPERATE AFTER OPERATOR HAS RELEASED CONTROL BUTTON. OPERATOR CAN STOP HOIST BY USING E-STOP/OFF BUTTON.	DELAY FOR REPAIRS	3
			A2. FAILS OPEN B2. INTERNAL PART FAILURE	HOIST SYSTEM INOPERATIVE IN THE UP DIRECTION OF TRAVEL.	DELAY FOR REPAIRS	3

FAILURE MODE AND EFFECTS ANALYSIS (FMEA) WORKSHEET

SYSTEM: BUILDING M-16
SUBSYSTEM: DUFF-NORTON ONE-TON COFFING HOIST, ELECTRICAL

DATE: NOVEMBER 1995
PREPARED BY: M. CROMPTON
D. GAYO

PART NO.	PART NAME	PART FUNCTION	A. FAILURE MODE B. CAUSE C. DETECTION METHOD D. CORRECTING ACTION E. TIME TO EFFECT	FAILURE EFFECT ON SYSTEM PERFORMANCE	FAILURE EFFECT ON CRITICAL HARDWARE AND/OR PERSONNEL SAFETY	CRIT CAT
DOWN	CONTACT, N.O.	WHEN ENERGIZED CONTACT CLOSES, PROVIDES CIRCUIT TO ENERGIZE HOIST MOTORS IN THE LOWERING DIRECTION	A1. FAILS CLOSED B1. INTERNAL PARTS FAILURE	HOIST WILL CONTINUE TO OPERATE AFTER OPERATOR HAS RELEASED CONTROL BUTTON. OPERATOR CAN STOP HOIST BY USING E-STOP/OFF BUTTON.	DELAY FOR REPAIRS	3
			A2. FAILS OPEN B2. INTERNAL PARTS FAILURE	HOIST INOPERATIVE IN LOWERING DIRECTION OF TRAVEL.	DELAY FOR REPAIRS.	3
	LOWER LIMIT SWITCH	PROVIDES HOIST WITH OVERTRAVEL. PROTECTION IN THE DOWN DIRECTION OF TRAVEL. LIMIT SWITCH IS INTENDED TO PREVENT HOOK FROM CONTACTING THE GROUND.	A1. FAILS CLOSED B1. INTERNAL PARTS FAILURE	LOSS OF OVERTRAVEL PROTECTION IN THE DOWN DIRECTION OF TRAVEL. OPERATOR CAN STOP HOIST USING THE E-STOP BUTTON OR THE "OFF" BUTTON.	DELAY FOR REPAIRS. REQUIRES MULTIPLE FAILURES.	3
			A2. FAILS OPEN B2. INTERNAL PARTS FAILURE	HOIST INOPERATIVE IN THE DOWN DIRECTION OF TRAVEL.	DELAY FOR REPAIRS.	3

FAILURE MODE AND EFFECTS ANALYSIS (FMEA) WORKSHEET

SYSTEM: BUILDING M-16
SUBSYSTEM: DUFF-NORTON ONE-TON COFFING HOIST, ELECTRICAL

DATE: NOVEMBER 1995
PREPARED BY: M. CROMPTON
D. GAYO

PART NO.	PART NAME	PART FUNCTION	A. FAILURE MODE B. CAUSE C. DETECTION METHOD D. CORRECTING ACTION E. TIME TO EFFECT	FAILURE EFFECT ON SYSTEM PERFORMANCE	FAILURE EFFECT ON CRITICAL HARDWARE AND/OR PERSONNEL SAFETY	CRIT CAT
	INITIAL UPPER LIMIT SWITCH	PROVIDES HOIST WITH OVERTRAVEL PROTECTION IN THE UP DIRECTION OF TRAVEL.	A1. FAILS CLOSED B1. INTERNAL PARTS FAILURE	LOSS OF PRIMARY OVERTRAVEL PROTECTION. HOIST IS PROTECTED BY A FINAL UPPER LIMIT SWITCH WHICH WILL OPEN MAIN LINE CONTACTS AND CUT OFF ALL POWER TO THE HOIST.	DELAY FOR REPAIRS. REQUIRES MULTIPLE FAILURES.	3
			A1. FAILS OPEN B2. INTERNAL PARTS FAILURE	HOIST INOPERATIVE IN THE UP DIRECTION OF TRAVEL.	DELAY FOR REPAIRS. REQUIRES MULTIPLE FAILURES.	3
UPPER PADDLE LIMIT SWITCH	FINAL UPPER LIMIT SWITCH	PROVIDES FINAL UPPER OVERTRAVEL PROTECTION BY OPENING MAIN LINE CIRCUIT BREAKER WHEN OPENED.	A1. FAILS CLOSED B1. INTERNAL PARTS FAILURE	LOSS OF FINAL OVERTRAVEL PROTECTION. HOIST IS PROTECTED BY PRIMARY GEAR DRIVEN LIMIT SWITCH AND E-STOP/OFF BUTTON.	DELAY FOR REPAIRS.	3
			A2. FAILS OPEN B2. INTERNAL PARTS FAILURE	HOIST SYSTEM INOPERATIVE.	DELAY FOR REPAIRS.	3
MOTOR BRAKE SOLENOID	COIL	PROVIDES ABILITY TO DISENGAGE HOIST MOTOR BRAKE.	A1. FAILS OPEN B1. DEFECTIVE WINDINGS	MECHANICAL LOAD BRAKE WILL REMAIN ENGAGED. HOIST SYSTEM INOPERATIVE.	DELAY FOR REPAIRS.	3

FAILURE MODE AND EFFECTS ANALYSIS (FMEA) WORKSHEET

SYSTEM: BUILDING M-16
SUBSYSTEM: DUFF-NORTON ONE-TON COFFING HOIST, ELECTRICAL

DATE: NOVEMBER 1995
PREPARED BY: M. CROMPTON
D. GAYO

PART NO.	PART NAME	PART FUNCTION	A. FAILURE MODE B. CAUSE C. DETECTION METHOD D. CORRECTING ACTION E. TIME TO EFFECT	FAILURE EFFECT ON SYSTEM PERFORMANCE	FAILURE EFFECT ON CRITICAL HARDWARE AND/OR PERSONNEL SAFETY	CRIT CAT
	COIL	PROVIDES ABILITY TO ENERGIZE AND CLOSE MAIN LINE CONTACTS WHICH ENABLES HOIST TO BE ENERGIZED.	A1. FAILS OPEN B1. DEFECTIVE WINDINGS	UNABLE TO ENERGIZE HOIST SYSTEM.	DELAY FOR REPAIRS.	3
	CONTACTS, N.O.	WHEN CLOSED, ALLOWS HOIST SYSTEM TO BE ENERGIZED.	A1. FAILS OPEN B1. INTERNAL PART FAILURE	UNABLE TO ENERGIZE HOIST SYSTEM. HOIST SYSTEM INOPERATIVE.	DELAY FOR REPAIRS.	3
			A2. FAILS CLOSED B2. INTERNAL PARTS FAILURE	UNABLE TO DE-ENERGIZE HOIST SYSTEM. REQUIRE MULTIPLE FAILURES.	DELAY FOR REPAIRS.	3
	CONTACTS, N.O.	WHEN ENERGIZED, CONTACTS CLOSE AND ENERGIZE HOIST MOTOR HIGH SPEED WINDINGS.	A1. FAILS OPEN B1. INTERNAL PARTS FAILURE	UNABLE TO ENERGIZE HOIST NOTOR IN HIGH SPEED MODE. HOIST STILL FUNCTIONAL IN LOW SPEED MODE.	DELAY FOR REPAIRS.	3
			A2. FAILS CLOSED B2. INTERNAL PART FAILURE	POSSIBLE DAMAGE TO HOIST MOTOR DUE TO THERMAL OVERLOAD. HOIST SYSTEM INOPERATIVE.	DELAY FOR REPAIRS.	3

FAILURE MODE AND EFFECTS ANALYSIS (FMEA) WORKSHEET

SYSTEM: BUILDING M-16
SUBSYSTEM: DUFF-NORTON ONE-TON COFFING HOIST, ELECTRICAL

DATE: NOVEMBER 1995
PREPARED BY: M. CROMPTON
D. GAYO

PART NO.	PART NAME	PART FUNCTION	A. FAILURE MODE B. CAUSE C. DETECTION METHOD D. CORRECTING ACTION E. TIME TO EFFECT	FAILURE EFFECT ON SYSTEM PERFORMANCE	FAILURE EFFECT ON CRITICAL HARDWARE AND/OR PERSONNEL SAFETY	CRIT CAT
	CONTACTS, N.O.	WHEN ENERGIZED, CONTACTS OPEN AND TERMINATE CURRENT FLOW TO HOIST MOTOR LOW SPEED WINDINGS.	A1. FAILS OPEN B1. INTERNAL PARTS FAILURE	UNABLE TO ENERGIZE HOIST MOTOR IN LOW SPEED MODE. HOIST STILL FUNCTIONAL IN HIGH SPEED MODE.	DELAY FOR REPAIRS.	3
			A2. FAILS CLOSED B2. INTERNAL PART FAILURE	POSSIBLE DAMAGE TO HOIST MOTOR DUE TO THERMAL OVERLOAD. HOIST SYSTEM INOPERATIVE.	DELAY FOR REPAIRS.	3
	COIL	WHEN ENERGIZED, OPENS/CLOSES CONTACTS WHICH CONTROL WHICH HOIST MOTOR WINDINGS ARE ENERGIZED.	A1. FAILS OPEN B1. INTERNAL PARTS FAILURE	HOIST SYSTEM INOPERATIVE IN HIGH SPEED MODE. LOW SPEED MODE WILL FUNCTION.	DELAY FOR REPAIRS.	3
XFMER	TRANSFORMER	PROVIDES CONTROL PENDANT WITH REQUIRED 120 VAC OPERATING VOLTAGE.	A1. FAILS OPEN B1. DEFECTIVE WINDINGS	UNABLE TO ISSUE COMMANDS TO HOIST SYSTEM FROM THE CONTROL PENDANT. HOIST SYSTEM INOPERATIVE.	DELAY FOR REPAIRS.	3

FAILURE MODE AND EFFECTS ANALYSIS (FMEA) WORKSHEET

SYSTEM: BUILDING M-16
SUBSYSTEM: DUFF-NORTON ONE-TON COFFING HOIST, ELECTRICAL

DATE: NOVEMBER 1995
PREPARED BY: M. CROMPTON
D. GAYO

PART NO.	PART NAME	PART FUNCTION	A. FAILURE MODE B. CAUSE C. DETECTION METHOD D. CORRECTING ACTION E. TIME TO EFFECT	FAILURE EFFECT ON SYSTEM PERFORMANCE	FAILURE EFFECT ON CRITICAL HARDWARE AND/OR PERSONNEL SAFETY	CRIT CAT
UP	PUSH BUTTON, THREE DETENT	PENDANT MOUNTED THREE DETENT PUSH BUTTON PROVIDES ABILITY TO ENERGIZE HOIST SYSTEM IN THE UP DIRECTION OF TRAVEL. ALSO PROVIDES ABILITY FOR OPERATOR TO SELECT REQUIRED HOISTING SPEED.	A1. FAILS CLOSED 1st DETENT B1. INTERNAL PART FAILURE	HOIST SYSTEM WILL CONTINUE TO MOVE IN SLOW SPEED AFTER OPERATOR COMMANDS STOP. OPERATOR CAN STOP HOIST BY USING E-STOP/OFF BUTTON.	DELAY FOR REPAIRS. REQUIRES MULTIPLE FAILURES.	3
			A2. FAILS OPEN 1st DETENT B2. INTERNAL PART FAILURE	HOIST INOPERATIVE IN SLOW SPEED MODE. HOIST WILL OPERATE IN HIGH SPEED.	DELAY FOR REPAIRS.	3
			A3. FAILS CLOSED 2nd DETENT B3. INTERNAL PART FAILURE	HOIST WILL CONTINUE TO MOVE IN FAST SPEED AFTER OPERATOR COMMANDS STOP. OPERATOR CAN STOP HOIST BY USING E-STOP/OFF BUTTON	DELAY FOR REPAIRS. REQUIRES MULTIPLE FAILURES.	3

FAILURE MODE AND EFFECTS ANALYSIS (FMEA) WORKSHEET

SYSTEM: BUILDING M-16
SUBSYSTEM: DUFF-NORTON ONE-TON COFFING HOIST, ELECTRICAL

DATE: NOVEMBER 1995
PREPARED BY: M. CROMPTON
D. GAYO

PART NO.	PART NAME	PART FUNCTION	A. FAILURE MODE B. CAUSE C. DETECTION METHOD D. CORRECTING ACTION E. TIME TO EFFECT	FAILURE EFFECT ON SYSTEM PERFORMANCE	FAILURE EFFECT ON CRITICAL HARDWARE AND/OR PERSONNEL SAFETY	CRIT CAT
			A4. FAILS OPEN 2nd DETENT B4. INTERNAL PART FAILURE	HOIST INOPERATIVE IN HIGH SPEED MODE. HOIST WILL OPERATE IN LOW SPEED.	DELAY FOR REPAIRS.	3
DOWN	PUSH BUTTON, THREE DETENT	PENDANT MOUNTED THREE DETENT PUSH BUTTON PROVIDES ABILITY TO ENERGIZE HOIST SYSTEM IN THE DOWN DIRECTION OF TRAVEL. ALSO PROVIDES ABILITY FOR OPERATOR TO SELECT REQUIRED HOISTING SPEED.	A1. FAILS CLOSED 1st DETENT B1. INTERNAL PART FAILURE	HOIST WILL CONTINUE TO MOVE IN SLOW SPEED AFTER OPERATOR COMMANDS STOP. OPERATOR CAN STOP HOIST BY USING E-STOP/OFF BUTTON.	DELAY FOR REPAIRS. REQUIRES MULTIPLE FAILURES.	3
			A2. FAILS OPEN 1st DETENT B2. INTERNAL PART FAILURE	HOIST INOPERATIVE IN SLOW SPEED MODE. HOIST WILL OPERATE IN HIGH SPEED.	DELAY FOR REPAIRS.	3

FAILURE MODE AND EFFECTS ANALYSIS (FMEA) WORKSHEET

SYSTEM: BUILDING M-16
SUBSYSTEM: DUFF-NORTON ONE-TON COFFING HOIST, ELECTRICAL

DATE: NOVEMBER 1995
PREPARED BY: M. CROMPTON
D. GAYO

PART NO.	PART NAME	PART FUNCTION	A. FAILURE MODE B. CAUSE C. DETECTION METHOD D. CORRECTING ACTION E. TIME TO EFFECT	FAILURE EFFECT ON SYSTEM PERFORMANCE	FAILURE EFFECT ON CRITICAL HARDWARE AND/OR PERSONNEL SAFETY	CRIT CAT
			A3. FAILS CLOSED 2nd DETENT B3. INTERNAL PART FAILURE	HOIST WILL CONTINUE TO MOVE IN MID SPEED AFTER OPERATOR COMMANDS STOP. OPERATOR CAN STOP HOIST BY USING E-STOP/OFF BUTTON.	DELAY FOR REPAIRS. REQUIRES MULTIPLE FAILURES.	3
			A4. FAILS OPEN 2nd DETENT B4. INTERNAL PART FAILURE	HOIST INOPERATIVE IN MID SPEED MODE. HOIST WILL OPERATE IN LOW SPEED.	DELAY FOR REPAIRS.	3
			A5. FAILS CLOSED 3rd DETENT B5. INTERNAL PART FAILURE	HOIST WILL CONTINUE TO MOVE IN FAST SPEED AFTER OPERATOR COMMANDS STOP. OPERATOR CAN STOP HOIST BY USING E-STOP/OFF BUTTON.	DELAY FOR REPAIRS. REQUIRES MULTIPLE FAILURES.	3
			A6. FAILS OPEN 3rd DETENT B6. INTERNAL PART FAILURE.	HOIST INOPERATIVE IN HIGH SPEED MODE. HOIST WILL OPERATE IN MID SPEED.	DELAY FOR REPAIRS.	3

FAILURE MODE AND EFFECTS ANALYSIS (FMEA) WORKSHEET

SYSTEM: BUILDING M-16
SUBSYSTEM: DUFF-NORTON ONE-TON COFFING HOIST, ELECTRICAL

DATE: NOVEMBER 1995
PREPARED BY: M. CROMPTON
D. GAYO

PART NO.	PART NAME	PART FUNCTION	A. FAILURE MODE B. CAUSE C. DETECTION METHOD D. CORRECTING ACTION E. TIME TO EFFECT	FAILURE EFFECT ON SYSTEM PERFORMANCE	FAILURE EFFECT ON CRITICAL HARDWARE AND/OR PERSONNEL SAFETY	CRIT CAT
E-STOP/OFF	PUSH BUTTON, MUSHROOM SHAPED, PUSH TO STOP, PULL TO START	PROVIDES ABILITY TO ENERGIZE HOIST SYSTEM OR TERMINATE HOIST OPERATIONS BY OPENING MAIN LINE CONTACTOR.	A1. FAILS CLOSED B1. INTERNAL PART FAILURE	LOSS OF ABILITY TO DE-ENERGIZE HOIST SYSTEM. NO EFFECT ON NORMAL OPERATIONS.	DELAY FOR REPAIRS. REQUIRES MULTIPLE FAILURES.	3
			A2. FAILS OPEN B2. INTERNAL PART FAILURE	UNABLE TO ENERGIZE HOIST SYSTEM. HOIST SYSTEM INOPERATIVE.	DELAY FOR REPAIRS.	3
RESET	TWO POSITION KEY SWITCH	PROVIDES ABILITY TO LOWER HOIST SYSTEM AFTER FINAL LIMIT SWITCH HAS BEEN ACTIVATED.	A1. FAILS CLOSED B1. INTERNAL PART FAILURE	LOSS OF FINAL OVERTRAVEL LIMIT PROTECTION. NO EFFECT ON NORMAL OPERATION.	DELAY FOR REPAIRS. REQUIRES MULTIPLE FAILURES.	3
			A2. FAILS OPEN B2. INTERNAL PART FAILURE	LOSS OF ABILITY TO OPERATE HOIST SYSTEM IN THE DOWN DIRECTION AFTER FINAL LIMIT SWITCH HAS BEEN ACTIVATED.	DELAY FOR REPAIRS.	3

5.3 Flex Hose FMEA Worksheets

There are no flex hoses associated with this equipment.

5.4 Orifice FMEA Worksheets

There are no orifices associated with this equipment.

5.5 Filter FMEA Worksheets

There are no filters associated with this equipment.

5.6 Requirements of NSS/GO-1740.9B

NSTS 22206, Revision D, requires that noncompliance to the requirements of NSS/GO-1740.9B, "NASA Safety Requirement for Lifting Devices and Equipment," be identified in the FMEA. Performance of the FMEA determined that the Duff-Norton one-ton Coffing hoist is in compliance with the requirements of NSS/GO-1740.9B.

5.7 Critical Items List

There was one critical item identified during this analysis. The critical item is defined as a Single Failure Point (SFP), in accordance with NSTS 22206, Revision D.

5.7.1 Critical Item List

PART NAME	QUANTITY	CRITICALITY
Hoist Transmission	1	2

5.7.2 Critical Item Acceptance Rationale Sheets

The technical rationale for accepting the risk of retaining the Critical Item is documented on the following Critical Item Sheets.

Critical Item: Hoist Transmission
Criticality Category: 2

System/Area: Duff-Norton One-Ton Coffing Hoist/Building M-16

Part No.: See Table 1: Parts List, Hoist Transmission

Function: Reduces rotational speed from hoist motor to rope drum and supplies torque to the Output Shaft

Critical Failure Mode: Disengages

Failure Cause: Broken teeth, structural failure

Failure Effect: Load will drop, could cause damage to flight hardware. Most probable result of structural failure would be binding and/or noisy operation

ACCEPTANCE RATIONALE

Design:

The subject one-ton hoist is an off-the-shelf, OEM type equipment and meets the requirements of NSS/GO-1740.9B and is acceptable for critical lift applications.

Gearing design based on AGMA Standards.

Structural failure would be required for disengagement. Most probable result of structural failure would be binding and/or noisy operation.

Test:

- Periodic test and inspection is performed in accordance with "Test and Inspection Procedure for Gantry, Electric Wire Rope Hoist, Manual Trolley, Gantry No. M-16-1," NSI Procedure Number 44-06-444.
- Hoist is operated through its entire length of travel prior to each critical lift or once a day if multiple lifts are to be performed.
- Perform "daily inspections" in accordance with paragraph 203.d. of NSS/GO-1740.9B.
- Hoist was proof load tested to 125% rated load after installation and prior to first use.
- Hoist system is load tested at 100% rated load annually.

Inspection:

- Inspection is performed in accordance with the aforementioned NSI Procedure Number 44-06-444 and NSI Report Number 44-06-444, "Periodic Test and Inspection Report; Gantry, Electric Wire Rope Hoist, Manual Trolley." Formal periodic inspection reports are documented by qualified, authorized personnel.

- Gear Reducer is visually inspected prior to each use for visual signs of leakage or cracks.

- Gear Reducer oil level is checked quarterly.

- Gear Reducer oil is sampled annually for water, particles or other contamination.

Failure History:

Eight Coffing hoists in the GSFC inventory have continually demonstrated reliability. No hardware test and inspection failures have been documented to date.

Operational Use:

Hoist transmission failure would, most probably, result from the specific failure of the output gear assembly. Broken gear teeth would be detected by noisy transmission operation and/or binding. Corrective action would require the operator to immediately cease lifting operation and implement emergency procedures.

Catastrophic failure of the hoist transmission resulting in dropping the load is unlikely. This failure scenario would take multiple failures of gear teeth without operator detection and intervention.

Index No.	Part Name	Part No.
1	Transmission Cover	34J16
2	Seal	561K2
3	Seal	MA-562
4	Output Pinion	404J1
5	Output Gear Assembly	407JG26
6	Brake Disc	580J8
7	Pressure Plate	5J6
8	Nut	130J3
9	Ratchet and Bushing Assembly	7JG15-2
10	Screw	H-2255
11	Lock Washer	H-4133
12	Dowel Pin (Housing)	H-5382
13	Screw (Housing)	H-2978-P
14	Retaining Ring	H-5503
15	Fill Plug, Vented	H-6258
16	Level Plug	S-25-13
17	Gasket	560J5
18	Drain Plug	H-6268
19	Transmission Housing	35J6
20	Bearing	500K7
21	Input Pinion:	
	WR-1016 & WR-2016	400J1
	WR-1032	400J3
22	Input Gear:	
	WR-1016 & WR-2016	401J5
	WR-1032	401J3
23	Load Equalizer Assembly:	
	WR-1016	591JG4
	WR-1032	591JG5
	WR-2016	591JG7

Index No.	Part Name	Part No.
24	Intermediate Pinion:	
	WR-1016 & WR-2016	402J2
	WR-1032	402J3
25	Retaining Ring:	
	WR-1016 & WR-2016	H-5549
	WR-1032	H-5530
26*	Transmission Replacement Oil Kit	14J1
27	Retaining Ring	H-5566
28	Output Shaft	132J23
29	Bearing	500K29
30	Retaining Ring	H-5539
31	Dowel Pin (Pawl)	H-5493
32	Bearing Adapter	32J2
33	Bearing	500K3
34	Retaining Ring	H-5536
35	Screw	H-2694-P
36	Dowel Pin	H-5383
37	Washer	H-4082-P
38*	Seal Kit (Includes three 561K2 seals, one MA-562 seal and one 560J5 gasket)	14J2
39	Shipping Plug (Non-Vented)	S-25-4
40	Pawl Spring	340J8
41	Pawl	25J2
42	Pawl Spacer	141J14

PARTS LIST
HOIST TRANSMISSION

TABLE 1

5.8 Risk Assessment

The following evaluation of risk acceptance was performed in accordance with the criteria of NHB 1700.1(V1-B) and RECERT-42-011. A Risk Assessment Matrix is included. See Figure 7. The Severity and suggested Likelihood of Occurrence for each of the Critical Items is documented. The Controls are considered to be in place to achieve minimum residual risk. Definitions for Risk Severity Level, Likelihood of Risk Occurrence and Risk follow.

Risk Severity Level

Marginal - a hazard that could result in a mishap or minor mishap inflicting first-aid injury to personnel, and/or damage to flight hardware or ground equipment which can be tolerated or repaired without significant program delay.

Critical - a hazard that could result in serious injury to personnel and/or damage to flight hardware or ground equipment which could cause a significant program delay.

Catastrophic - a hazard that could result in a mishap causing fatal injury to personnel and/or loss of one or more major elements of the flight hardware or ground facility.

Likelihood of Risk Occurrence

Probable - expected to happen
Occasional - could happen
Remote - not expected to happen

Unacceptable Risk - Minor Uncertainties Exist. Further action will be required to reduce the risk to an acceptable level.

Acceptable Risk - Minor Uncertainties Exist. The level of risk from the activity is assessed to be sufficiently low to approve the activity.

Acceptable Risk - Uncertainties Controlled/Managed. The in-place controls have significantly reduced the risk level such that hazard occurrence is not expected to happen.

The recommended Controls are summarized below.

- Perform the tests and inspections identified in the Critical Item List to minimize the probability of occurrence of the documented failure mode and cause.

- Document applicable procedures to provide specific instructions pertinent to the hoist transmission.

GSFC RECERTIFICATION
HAZARD SEVERITY LEVELS VERSUS LIKELIHOOD OF OCCURRENCE FOR RISK ASSESSMENT*

		HAZARD* SEVERITY LEVELS		
		MARGINAL (COULD RESULT IN MINOR INJURY OR MINOR FLIGHT HARDWARE DAMAGE)	CRITICAL (COULD RESULT IN SERIOUS INJURY OR SIGNIFICANT FLIGHT HARDWARE DAMAGE)	CATASTROPHIC (COULD RESULT IN FATALITY OR LOSS OF FLIGHT HARDWARE)
LIKELIHOOD	*PROBABLE (EXPECTED TO HAPPEN)*	UNACCEPTABLE RISK (UNCERTAINTIES EXIST)	UNACCEPTABLE RISK (UNCERTAINTIES EXIST)	UNACCEPTABLE RISK (UNCERTAINTIES EXIST)
	OCCASIONAL (COULD HAPPEN)	ACCEPTABLE RISK (MINOR UNCERTAINTIES EXIST)	UNACCEPTABLE RISK (MINOR UNCERTAINTIES EXIST)	UNACCEPTABLE RISK (MINOR UNCERTAINTIES EXIST)
	REMOTE (NOT EXPECTED TO HAPPEN)	ACCEPTABLE RISK (UNCERTAINTIES CONTROLLED/ MANAGED)	ACCEPTABLE RISK (UNCERTAINTIES CONTROLLED/ MANAGED)	ACCEPTABLE RISK (UNCERTAINTIES CONTROLLED/ MANAGED) HOIST TRANSMISSION

* THIS GSFC RECERT RISK ASSESSMENT MATRIX IS A MODIFIED VERSION OF FIGURE G-1, APPENDIX G, IN NHB 1700.1(V1-B), "NASA SAFETY POLICY AND REQUIREMENTS DOCUMENT," JUNE 1993.

Figure 7

SECTION 6 - OPERATING AND SUPPORT HAZARD ANALYSIS (O&SHA)

6.1 Objectives

This Operating and Support Hazard Analysis for the Duff-Norton One-Ton Coffing Hoist and Gantry at Building M-16 identifies potential hazards, evaluates their risk level, and provides the mechanism for their elimination and control. Failure of passive components and generic hazards are evaluated. Areas reviewed in this analysis are as follows:

a. Concerns that could cause death/injury to personnel or loss/damage to flight hardware.
b. Design issues that effect normal operation of the lifting system.

This Analysis includes an engineering stress analysis. Reference NSI Document No. 14-11-431 (attached) titled "Wallops Island Facility, 1-Ton Gantry Hoist and Magnetic Calibration Facility Hoist for Pegasus Project, Engineering Stress Analysis, July 1995.

Those conditions found in the Building M-16 environment - human relationship that could cause potential sources of danger are not part of this analysis. The latter analyses shall be combined, by others, with the analysis herein to develop the Systems Hazard Analysis (SHA).

6.2 O&SHA Worksheets

An analysis of the aforementioned concerns was performed and documented on the following O&SHA worksheets.

OPERATING AND SUPPORT HAZARD ANALYSIS (O&SHA) WORKSHEET

SYSTEM: BUILDING M-16 CATEGORY: CRITICAL APPLICATION PHASE: LIFTING OPERATION DATE: NOVEMBER 1995
SUBSYSTEM: DUFF-NORTON ONE-TON COFFING HOIST PREPARED BY: M. CROMPTON
CLOSURE CONCURRENCE: _____ PROJECT MANAGER _____ DEPUTY RECERT MANAGER

HAZARDOUS CONDITION	HAZARD CAUSE	HAZARD EFFECT	SEVERITY	SAFETY REQUIREMENTS	HAZARD ELIMINATION/ CONTROL PROVISIONS	LIKELIHOOD OF OCCURRENCE	STATUS	VERIFICATION METHOD
H1-PAYLOAD COLLIDES WITH 1-TON HOIST	E1-FIRST UPPER LIMIT SWITCH FAILS.	NO EFFECT UNLESS E2 ALSO OCCURS	CATASTROPHIC	NSS/GO-1740.9B PARA. 401.g.(7) REQUIRES THAT CRITICAL CRANES HAVE DUAL UPPER LIMIT SWITCHES - AN INITIAL AND A FINAL, WHICH PRECLUDE ALL CRANE MOTION.	PER DRAWING 983EC710 INITIAL UPPER LIMIT SWITCH IS A GEARED LIMIT SWITCH WHICH PREVENTS THE HOIST FROM BEING RAISED. THE PADDLE UPPER LIMIT SWITCH TRIPS THE MAINLINE CONTACTOR.	REMOTE	CLOSED	• FMEA: NSI DOCUMENT NO. 40-01-647 • REVIEW PROCEDURES • INSPECTION
H2-PAYLOAD COLLIDES WITH 1-TON HOIST	E2-FINAL UPPER LIMIT SWITCH FAILS.	NO EFFECTS UNLESS E1 ALSO OCCURS	CATASTROPHIC	NSS/GO-1740.9B, PARA. 401.g.(7) REQUIRES THAT CRITICAL CRANES HAVE DUAL UPPER LIMIT SWITCHES - AN INITIAL AND A FINAL, WHICH PRECLUDE ALL CRANE MOTION.	PER DRAWING 983EC710, INITIAL UPPER LIMIT SWITCH IS A GEARED LIMIT SWITCH WHICH PREVENTS THE HOIST FROM BEING RAISED. THE PADDLE UPPER LIMIT SWITCH TRIPS THE MAINLINE CONTACTOR. NSS/GO-1740.9B, PARA 206.a.(1) REQUIRES THAT EMERGENCY PROCEDURES BE DEVELOPED FOR CONTINGENCY ACTIONS OR OTHER EMERGENCIES. GSFC REQUIRES THAT APPROVED SPECIFIC TECHNICAL INSPECTION PROCEDURES FOR LIFTING DEVICES AND EQUIPMENT.	REMOTE	OPEN	• FMEA: NSI DOCUMENT NO. 40-01-647 • REVIEW PROCEDURES • INSPECTION • EMERGENCY PROCEDURES DOCUMENT NO. _____ • SPECIFIC TECHNICAL INSPECTION PROCEDURES DOCUMENT NO. _____
H3-PAYLOAD COLLIDES WITH FLOOR	E5-COLLISION DUE TO PASSIVE COMPONENT FAILURE	LOSS (DAMAGE) OF FLIGHT HARDWARE	CATASTROPHIC	DEVELOPED UNDER H4.	DEVELOPED UNDER H4.	REMOTE		

OPERATING AND SUPPORT HAZARD ANALYSIS (O&SHA) WORKSHEET

SYSTEM: BUILDING M-16 CATEGORY: CRITICAL APPLICATION PHASE: LIFTING OPERATION DATE: NOVEMBER 1995
SUBSYSTEM: DUFF-NORTON ONE-TON COFFING HOIST PREPARED BY: M. CROMPTON
CLOSURE CONCURRENCE: _____ PROJECT MANAGER _____ DEPUTY RECERT MANAGER

HAZARDOUS CONDITION	HAZARD CAUSE	HAZARD EFFECT	SEVERITY	SAFETY REQUIREMENTS	HAZARD ELIMINATION/ CONTROL PROVISIONS	LIKELIHOOD OF OCCURRENCE	STATUS	VERIFICATION METHOD
H4-COLLISION DUE TO PASSIVE COMPONENT FAILURE	E6-HOOK FAILS, ROPE FAILS, ROPE DRUM FAILS, ROPE SHEAVES FAIL, ROPE CLAMP FAILS	LOSS (DAMAGE) OF FLIGHT HARDWARE	CATASTROPHIC	NSS/GO-1740.9B: • PARA. 403.c.(3) AND PARA. 403.d.(2)(d) REQUIRES DAILY AND MONTHLY INSPECTION OF HOOKS FOR DEFORMATION OR CRACKS. • PARA. 403.d.(1)(e) REQUIRES THAT HOOK RETAINING MEMBERS REQUIRE ANNUAL INSPECTION FOR DEFORMATION, CRACKS AND NDE, AS REQUIRED. • PARA. 403.c.(5) REQUIRES DAILY ROPE INSPECTION FOR DISCREPANCIES. • PARA 403.d.(2) REQUIRES MONTHLY INSPECTION OF ROPE FOR DETERIORATION AND DAMAGE. • PARA 403.d.(1) REQUIRES ANNUAL ROPE INSPECTION. • PARA. 403.d.(1)(a) REQUIRES PERIODIC INSPECTION FOR CRACKED OR WORN DRUMS. • PARA. 403.d.(1)(a) REQUIRES FORMAL PERIODIC INSPECTION FOR CRACKED OR WORN SHEAVES. • PARA. 401.f.5 REQUIRES ROPE ENDS TO BE ANCHORED SECURELY BY A CLAMP AND THE DRUM HAVE NO LESS THAN TWO FULL WRAPS WHEN THE HOOK IS AT ITS LOWEST POINT.	GSFC REQUIRES APPROVED, SPECIFIC, TECHNICAL, INSPECTION PROCEDURES FOR LIFTING DEVICES AND EQUIPMENT (LDE) 1. FMEA PERFORMED TO VERIFY ADEQUATE MARGIN OF SAFETY. 2. PROCEDURES VERIFY LOADS LIFTED ARE EQUAL TO OR LESS THAN RATED CAPACITY. 3. CAPACITY POSTED ON HOIST. 4. PERIODIC AND FREQUENT INSPECTIONS VERIFY NO DEGRATION OF COMPONENTS THAT MAY REDUCE THE RATED CAPACITY. 5. ONLY CERTIFIED OPERATORS/RIGGERS SHALL PERFORM THE OPERATION.	REMOTE	OPEN	• FMEA: NSI DOCUMENT NO. 40-01-647 • REVIEW PROCEDURES • INSPECTION • SPECIFIC, TECHNICAL INSPECTION PROCEDURES DOCUMENT NO. _____
H5-TROLLEY COMMAND FAILURE DURING HOIST	FLIGHT HARDWARE COLLIDES WITH GANTRY STRUCTURE	LOSS OF FLIGHT HARDWARE	CATASTROPHIC	TROLLEY IS MANUALLY OPERATED. NSS/GO-1740.9B REQUIRES A TRAINING, EXAMINATION, AND LICENSING PROGRAM TO CERTIFY HOIST OPERATORS, RIGGERS, AND FLAGMEN.	GSFC REQUIRES APPROVED, SPECIFIC, TECHNICAL, INSPECTION PROCEDURES FOR LIFTING DEVICES AND EQUIPMENT (LDE). ONLY CERTIFIED OPERATORS/RIGGERS SHALL PERFORM THE OPERATION.	REMOTE	OPEN	• REVIEW PROCEDURES • INSPECTION

OPERATING AND SUPPORT HAZARD ANALYSIS (O&SHA) WORKSHEET

SYSTEM: BUILDING M-16 CATEGORY: CRITICAL APPLICATION PHASE: LIFTING OPERATION DATE: NOVEMBER 1995
SUBSYSTEM: DUFF-NORTON ONE-TON COFFING HOIST PREPARED BY: M. CROMPTON
CLOSURE CONCURRENCE: _____ PROJECT MANAGER _____ DEPUTY RECERT MANAGER

HAZARDOUS CONDITION	HAZARD CAUSE	HAZARD EFFECT	SEVERITY	SAFETY REQUIREMENTS	HAZARD ELIMINATION/ CONTROL PROVISIONS	LIKELIHOOD OF OCCURRENCE	STATUS	VERIFICATION METHOD
H6-OVERLOADING	E7-LABELED CAPACITY EXCEEDED	LOSS (DAMAGE) OF FLIGHT HARDWARE	CATASTROPHIC	NSS/GO-1740.9B: • PARA. 406.b.(4) REQUIRES THAT HOISTS SHALL NOT BE LOADED BEYOND RATED LOAD EXCEPT DURING AUTHORIZED TESTS. • PARA. 405.c.(2) REQUIRES CRITICAL LIFT OPERATORS TO BE TRAINED IN THE SPECIFIC HAZARDS AND SPECIAL PROCEDURES ASSOCIATED WITH THE LIFT.	GSFC REQUIRES APPROVED TECHNICAL INSPECTION PROCEDURES FOR LIFTING DEVICES AND EQUIPMENT (LDE). AN LDE OPERATOR TRAINING, EXAMINATION AND LICENSING PROGRAM IS IN PLACE, IN ACCORDANCE WITH NSS/GO-1740.9B, PARA. 405.a.	REMOTE	OPEN	• FMEA: NSI DOCUMENT NO. 40-01-647 • REVIEW PROCEDURES • INSPECTION • TECHNICAL INSPECTION PROCEDURES, DOCUMENT NO. _____
H7-POWER IS APPLIED CONTINUOUSLY TO HOIST MOTOR	E8-"DOWN" CONTACTOR FAILS CLOSED	NO EFFECT WITHOUT E-STOP SWITCH. ALSO FAILING CLOSED.	CATASTROPHIC	NSS/GO-1740.9B: • PARA. 401.g.(6) REQUIRES THAT THE ELECTRICAL SYSTEM BE FAIL-SAFE AND NOT CAUSE THE HOIST TO OPERATE IN A SPEED RANGE FASTER THAN COMMANDED. • PARA. 7.d. RQUIRES A RED, EMERGENCY STOP BUTTON THAT OPERATES THE MAINLINE CONTACTOR AND/OR MAIN CIRCUIT BREAKER.	REQUIREMENT MET BY DESIGN - TWO INDEPENDENT FAILURES ARE NECESSARY FOR HAZARD TO OCCUR. NSS/GO-1740.9B, PARA. 206.a.(1) REQUIRES THAT EMERGENCY PROCEDURES BE DEVELOPED FOR CONTINGENCY ACTIONS OR OTHER EMERGENCIES. GSFC REQUIRES THAT APPROVED, SPECIFIC, TECHNICAL INSPECTION PROCEDURES FOR LIFTING DEVICES AND EQUIPMENT	REMOTE	OPEN	• FMEA: NSI DOCUMENT NO. 40-01-647 • REVIEW PROCEDURES • INSPECTION • EMERGENCY PROCEDURES, DOCUMENT NO. _____ • SPECIFIC, TECHNICAL INSPECTION PROCEDURES, DOCUMENT NO. _____
H7-POWER IS APPLIED CONTINUOUSLY TO HOIST MOTOR	E10-"DOWN" SWITCH FAILS CLOSED	NO EFFECT WITHOUT E-STOP SWITCH. ALSO FAILING CLOSED.	CATASTROPHIC	NSS/GO-1740.9B: • PARA. 401.g.(6) REQUIRES THAT THE ELECTRICAL SYSTEM BE FAIL-SAFE AND NOT CAUSE THE HOIST TO OPERATE IN A SPEED RANGE FASTER THAN COMMANDED. • PARA. 401.g.(5) REQUIRES A RED, EMERGENCY STOP BUTTON THAT OPERATES THE MAINLINE CONTACTOR AND/OR MAIN CIRCUIT BREAKER.	REQUIREMENT MET BY DESIGN - TWO INDEPENDENT FAILURES ARE NECESSARY FOR HAZARD TO OCCUR. NSS/GO-1740.9B, PARA. 206.a.(1) REQUIRES THAT EMERGENCY PROCEDURES BE DEVELOPED FOR CONTINGENCY ACTIONS OR OTHER EMERGENCIES. GSFC REQUIRES THAT APPROVED, SPECIFIC, TECHNICAL INSPECTION PROCEDURES FOR LIFTING DEVICES AND EQUIPMENT.	REMOTE	OPEN	• FMEA: NSI DOCUMENT NO. 40-01-647 • REVIEW PROCEDURES • INSPECTION • EMERGENCY PROCEDURES, DOCUMENT NO. _____ • SPECIFIC, TECHNICAL INSPECTION PROCEDURES, DOCUMENT NO. _____

OPERATING AND SUPPORT HAZARD ANALYSIS (O&SHA) WORKSHEET

SYSTEM: BUILDING M-16 CATEGORY: CRITICAL APPLICATION PHASE: LIFTING OPERATION DATE: NOVEMBER 1995
SUBSYSTEM: DUFF-NORTON ONE-TON COFFING HOIST PREPARED BY: M. CROMPTON
CLOSURE CONCURRENCE: _____ PROJECT MANAGER _____ DEPUTY RECERT MANAGER

HAZARDOUS CONDITION	HAZARD CAUSE	HAZARD EFFECT	SEVERITY	SAFETY REQUIREMENTS	HAZARD ELIMINATION/ CONTROL PROVISIONS	LIKELIHOOD OF OCCURRENCE	STATUS	VERIFICATION METHOD
H7-POWER IS APPLIED CONTINUOUSLY TO HOIST MOTOR	E9-SPEED CONTROL FAILS INTO FAST SPEED	NO EFFECT WITHOUT E-STOP SWITCH. ALSO FAILING CLOSED.	CATASTROPHIC	NSS/GO-1740.9B: • PARA. 401.g.(6) REQUIRES THAT THE ELECTRICAL SYSTEM BE FAIL-SAFE AND NOT CAUSE THE HOIST TO OPERATE IN A SPEED RANGE FASTER THAN COMMANDED. • PARA 401.g.(5) REQUIRES A RED, EMERGENCY STOP BUTTON THAT OPERATES THE MAINLINE CONTACTOR AND/OR MAIN CIRCUIT BREAKER.	REQUIREMENT MET BY DESIGN - TWO INDEPENDENT FAILURES ARE NECESSARY FOR HAZARD TO OCCUR. NSS/GO-1740.9B, PARA. 206.a.(1) REQUIRES THAT EMERGENCY PROCEDURES BE DEVELOPED FOR CONTINGENCY ACTIONS OR OTHER EMERGENCIES. GSFC REQUIRES THAT APPROVED, SPECIFIC, TECHNICAL INSPECTION PROCEDURES FOR LIFTING DEVICES AND EQUIPMENT.	REMOTE	OPEN	• FMEA: NSI DOCUMENT NO. 40-01-647 • REVIEW PROCEDURES • INSPECTION • EMERGENCY PROCEDURES, DOCUMENT NO. _____ • SPECIFIC, TECHNICAL INSPECTION PROCEDURES, DOCUMENT NO. _____
H8-HOIST BRAKES FAIL TO HOLD LOAD	E11-ELECGTRO-MECHANICAL BRAKE FAILS.	NO EFFECT WITHOUT OCCURRENCE OF E12 IN CONJUNCTION	CATASTROPHIC	NSS/GO-1740.9B, PARA. 401.f.(2) REQUIRES THAT HOISTS HAVE TWO MEANS OF BRAKING, EACH OF WHICH CAN HOLD THE RATED LOAD.	THE HOIST HAS TWO MAIN BRAKES, EACH OF WHICH IS CAPABLE OF STOPPING AND HOLDING RATED LOAD.	REMOTE	OPEN	• FMEA: NSI DOCUMENT NO. 40-01-647 • REVIEW PROCEDURES • INSPECTION
H8-HOIST BRAKES FAIL TO HOLD LOAD	E12-MECHANICAL LOAD BRAKE FAILS.	NO EFFECT WITHOUT OCCURRENCE OF E11 IN CONJUNCTION	CATASTROPHIC	NSS/GO-1740.9B, PARA. 401.f.(2) REQUIRES THAT HOISTS HAVE TWO MEANS OF BRAKING, EACH OF WHICH CAN HOLD THE RATED LOAD.	THE HOIST HAS TWO MAIN BRAKES, EACH OF WHICH IS CAPABLE OF STOPPING AND HOLDING RATED LOAD. NSS/GO-1740.9B, PARA. 206.a.(1) REQUIRES THAT EMERGENCY PROCEDURES BE DEVELOPED FOR CONTINGENCY ACTIONS OR OTHER EMERGENCIES. GSFC REQUIRES THAT APPROVED, SPECIFIC, TECHNICAL INSPECTION PROCEDURES FOR LIFTING DEVICES AND EQUIPMENT	REMOTE	OPEN	• FMEA: NSI DOCUMENT NO. 40-01-647 • REVIEW PROCEDURES • INSPECTION • EMERGENCY PROCEDURES, DOCUMENT NO. _____ • SPECIFIC, TECHNICAL INSPECTION PROCEDURES, DOCUMENT NO. _____
H9-FIRE DURING CRANE OPERATION	E13-FIRE DUE TO MECHANICAL FRICTION	LOSS OF LIFE AND/OR FLIGHT HARDWARE	CATASTROPHIC	DEVELOPED UNDER H9 BELOW	DEVELOPED UNDER H9 BELOW	REMOTE	OPEN	• FMEA: NSI DOCUMENT NO. 40-01-647 • REVIEW PROCEDURES • INSPECTION

OPERATING AND SUPPORT HAZARD ANALYSIS (O&SHA) WORKSHEET

SYSTEM: BUILDING M-16 CATEGORY: CRITICAL APPLICATION PHASE: LIFTING OPERATION DATE: NOVEMBER 1995
SUBSYSTEM: DUFF-NORTON ONE-TON COFFING HOIST PREPARED BY: M. CROMPTON
CLOSURE CONCURRENCE: _____ PROJECT MANAGER _____ DEPUTY RECERT MANAGER

HAZARDOUS CONDITION	HAZARD CAUSE	HAZARD EFFECT	SEVERITY	SAFETY REQUIREMENTS	HAZARD ELIMINATION/ CONTROL PROVISIONS	LIKELIHOOD OF OCCURRENCE	STATUS	VERIFICATION METHOD
H9-FIRE DURING CRANE OPERATION	E14-FIRE DUE TO ELECTRICAL FAILURE	LOSS OF LIFE AND/OR FLIGHT HARDWARE	CATASTROPHIC	NSS/GO-1740.9B, PARA. 401.g.(1), (2), AND (3) REQUIRE THAT (1) WIRING AND SAFETY DEVICES BE IN ACCORDANCE WITH NFPA, (2) ENCLOSURES SHALL PROTECT EQUIPMENT AGAINST ENVIRONMENTAL CONDITIONS, AND (3) REQUIRES THE PROVISION OF OVERLOAD PROTECTION.	THE CRANE IS PROTECTED FROM AN OVERCURRENT CONDITION BY THE CUSTOMER POWER SUPPLY. NSS/GO-1740.9B, PARA. 206.a.(1) REQUIRES THAT EMERGENCY PROCEDURES BE DEVELOPED FOR CONTINGENCY ACTIONS OR OTHER EMERGENCIES. GSFC REQUIRES THAT APPROVED, SPECIFIC, TECHNICAL INSPECTION PROCEDURES FOR LIFTING DEVICES AND EQUIPMENT.	REMOTE	OPEN	• FMEA: NSI DOCUMENT NO. 40-01-647 • REVIEW PROCEDURES • INSPECTION • EMERGENCY PROCEDURES, DOCUMENT NO. _____ • SPECIFIC, TECHNICAL INSPECTION PROCEDURES, DOCUMENT NO. _____
H10-FIRE DUE TO MECHANICAL FRICTION	LACK OF LUBRICATION	FIRE/EXPLOSION DURING CRANE OPERATIONS	CATASTROPHIC	NSS/GO-1740.9B, PARA. 404 REQUIRES THAT A PREVENTATIVE MAINTENANCE PROGRAM BE ESTABLISHED. CMAA SPECIFICATION NO. 74 REQUIRES THAT THE CRANE BE LUBRICATED IN ACCORDANCE WITH CRANE MANUFACTURER'S RECOMMENDATION. MANUFACTURER'S RECOMMENDED LUBRICATION SCHEDULE IS PROVIDED IN PUBLICATION WR-1-680-1.	THE GEAR CASE IS DESIGNED OIL-TIGHT AND OUTFITTED FOR OIL MAINTENANCE.	REMOTE	OPEN	• FMEA: NSI DOCUMENT NO. 40-01-647 • REVIEW PROCEDURES • INSPECTION
H10-FIRE DUE TO MECHANICAL FRICTION	E16-BRAKE SEIZES	FIRE/EXPLOSION DURING CRANE OPERATIONS	CATASTROHPIC	PER CFR 29 1910.179.f.(2)(ii) THE BRAKES "...SHALL HAVE THE THERMAL CAPACITY FOR FREQUENCY OF OPERATION REQUIRED BY SERVICE."	THE CRANE IS EQUIPPED WITH TWO BRAKES, EACH OF WHICH ARE CAPABLE OF STOPPING AND HOLDING THE LOAD. NSS/GO-1740.9B, PARA. 206.a.(1) REQUIRES THAT EMERGENCY PROCEDURES BE DEVELOPED FOR CONTINGENCY ACTIONS OR OTHER EMERGENCIES. GSFC REQUIRES THAT APPROVED, SPECIFIC, TECHNICAL INSPECTION PROCEDURES FOR LIFTING DEVICES AND EQUIPMENT.	REMOTE	OPEN	FMEA: NSI DOCUMENT NO. 40-01-647 • REVIEW PROCEDURES • INSPECTION • EMERGENCY PROCEDURES, DOCUMENT NO. _____ • SPECIFIC, TECHNICAL INSPECTION PROCEDURES, DOCUMENT NO. _____

OPERATING AND SUPPORT HAZARD ANALYSIS (O&SHA) WORKSHEET

SYSTEM: BUILDING M-16 CATEGORY: CRITICAL APPLICATION PHASE: LIFTING OPERATION DATE: NOVEMBER 1995
SUBSYSTEM: DUFF-NORTON ONE-TON COFFING HOIST PREPARED BY: M. CROMPTON
CLOSURE CONCURRENCE: _____ PROJECT MANAGER _____ DEPUTY RECERT MANAGER

HAZARDOUS CONDITION	HAZARD CAUSE	HAZARD EFFECT	SEVERITY	SAFETY REQUIREMENTS	HAZARD ELIMINATION/ CONTROL PROVISIONS	LIKELIHOOD OF OCCURRENCE	STATUS	VERIFICATION METHOD
H11-LOSS OF PERSONNEL DURING CRANE OPERATIONS	E17-ELECTRIC SHOCK TO PERSONNEL	LOSS OF LIFE AND/OR FLIGHT HARDWARE	CATASTROPHIC	NSS/GO-1740.9B, PARA. 401.g.(1), (2), AND (3) REQUIRE THAT (1) WIRING AND SAFETY DEVICES BE IN ACCORDANCE WITH NFPA, (2) ENCLOSURES SHALL PROTECT EQUIPMENT AGAINST ENVIRONMENTAL CONDITIONS, AND (3) REQUIRES THE PROVISION OF OVERLOAD PROTECTION.	ELECTRICAL PARTS ARE ENCLOSED, AND MEANS OF DISCONNECT COMPLY WITH THE STANDARDS. NSS/GO-1740.9B, PARA. 206.a.(1) REQUIRES THAT EMERGENCY PROCEDURES BE DEVELOPED FOR CONTINGENCY ACTIONS OR OTHER EMERGENCIES. PROGRAM GSFC REQUIRES THAT APPROVED, SPECIFIC, TECHNICAL INSPECTION PROCEDURES FOR LIFTING DEVICES AND EQUIPMENT.	REMOTE	OPEN	• FMEA: NSI DOCUMENT NO. 40-01-647 • REVIEW PROCEDURES • INSPECTION • EMERGENCY PROCEDURES, DOCUMENT NO. _____ • SPECIFIC, TECHNICAL INSPECTION PROCEDURES, DOCUMENT NO. _____
H11-LOSS OF PERSONNEL DURING CRANE OPERATIONS	E18-PERSONNEL STRUCK BY PAYLOAD OR HOOK DURING CRANE OPERATIONS	LOSS OF LIFE AND/OR FLIGHT HARDWARE	CATASTROPHIC	NSS/GO-1740.9B, PARA. 406.b.(2) AND (6) DEFINE REQUIREMENTS FOR CRANE OPERATIONS, INCLUDING THE ESTABLISHMENT OF SAFETY ZONES.	CRITICAL LIFT REQUIREMENTS, IN ACCORDANCE WITH GMI 1710.6, SHALL INCLUDE SPECIAL LIFT PROCEDURES. CRITICAL LIFT OPERATORS MUST BE TRAINED IN THE SPECIFIC HAZARDS AND SPECIAL PROCEDURES ASSOCIATED WITH THE LIFT. PRO	REMOTE	OPEN	• FMEA: NSI DOCUMENT NO. 40-01-647 • REVIEW PROCEDURES • INSPECTION • SPECIAL CRITICAL LIFT PROCEDURES, DOCUMENT NO. _____
H11-LOSS OF PERSONNEL DURING CRANE OPERATIONS	E19-FIRE DURING CRANE OPERATIONS	LOSS (DAMAGE) OF FLIGHT HARDWARE	CATASTROPHIC	NSS/GO-1740.9B, PARA 401.g.(1), (2), AND (3) REQUIRE THAT (1) WIRING AND SAFETY DEVICES BE IN ACCORDANCE WITH NFPA, (2) ENCLOSURES SHALL PROTECT EQUIPMENT AGAINST ENVIRONMENTAL CONDITIONS, AND (3) REQUIRES THE PROVISION OF OVERLOAD PROTECTION.	NSS/GO-1740.9B, PARA. 206.a.(1) REQUIRES THAT EMERGENCY PROCEDURES BE DEVELOPED FOR CONTINGENCY ACTIONS OR OTHER EMERGENCIES. GSFC REQUIRES THAT APPROVED, SPECIFIC, TECHNICAL INSPECTION PROCEDURES FOR LIFTING DEVICES AND EQUIPMENT.	REMOTE	OPEN	• FMEA: NSI DOCUMENT NO. 40-01-647 • REVIEW PROCEDURES • INSPECTION • EMERGENCY PROCEDURES, DOCUMENT NO. _____ • SPECIFIC, TECHNICAL INSPECTION PROCEDURES.

OPERATING AND SUPPORT HAZARD ANALYSIS (O&SHA) WORKSHEET

SYSTEM: BUILDING M-16 CATEGORY: CRITICAL APPLICATION PHASE: LIFTING OPERATION DATE: NOVEMBER 1995
SUBSYSTEM: DUFF-NORTON ONE-TON COFFING HOIST PREPARED BY: M. CROMPTON
CLOSURE CONCURRENCE: _____ PROJECT MANAGER _____ DEPUTY RECERT MANAGER

HAZARDOUS CONDITION	HAZARD CAUSE	HAZARD EFFECT	SEVERITY	SAFETY REQUIREMENTS	HAZARD ELIMINATION/ CONTROL PROVISIONS	LIKELIHOOD OF OCCURRENCE	STATUS	VERIFICATION METHOD
H12-FAILURE OF THE HOIST TRANSMISSION	DISENGAGES DUE TO STRUCTURAL FAILURE	LOAD WILL DROP - COULD CAUSE DAMAGE TO FLIGHT HARDWARE	CATASTROPHIC	GEAR BOXES, SPEED REDUCERS, AND COUPLINGS SHALL BE CONSIDERED SINGLE FAILURE POINTS IF THEY ARE LOCATED BETWEEN THE DRUM AND THE BRAKE, IN ACCORDANCE WITH NSTS 22206 REVISION D.	NSS/GO-1740.9B: • PARA. 206.a.(1) REQUIRES THAT EMERGENCY PROCEDURES BE DEVELOPED FOR CONTINGENCY ACTIONS OR OTHER EMERGENCIES. • PARA. 402.a. AND b. REQUIRE A PROOF LOAD TEST BEFORE FIRST USE, NOT EXCEEDING 125% OF THE RATED LOAD. GSFC REQUIRES THAT APPROVED, SPECIFIC, TECHNICAL INSPECTION PROCEDURES FOR LIFTING DEVICES AND EQUIPMENT. CRITICAL LIFT REQUIREMENTS, IN ACCORDANCE WITH GMI 1710.6 SHALL INCLUDE SPECIAL LIFT PROCEDURES. CRITICAL LIFT OPERATORS MUST BE TRAINED IN THE SPECIFIC HAZARDS AND SPECIAL PROCEDURES ASSOCIATED WITH THE LIFT. HOISTS USED FREQUENTLY FOR CRITICAL LIFTS SHALL BE LOAD TESTED AT LEAST ONCE A YEAR.	REMOTE	OPEN	• FMEA: NSI DOCUMENT NO. 40-01-647 • REVIEW PROCEDURES • INSPECTION • EMERGENCY PROCEDURES, DOCUMENT NO. _____ • SPECIFIC, TECHNICAL INSPECTION PROCEDURES, DOCUMENT NO. _____ • CRITICAL LIFT PROCEDURE, DOCUMENT NO. _____
H13-OVER HEATING OF HOIST MOTOR AND OVERLOAD LIMITING CLUTCH	EXCEEDED CLUTCH CAPACITY - OVERLOAD	UNABLE TO LIFT LOAD. HOIST SYSTEM INOPERATIVE	DELAY FOR REPAIRS	NSS/GO-1740.9B, PARA. 406.b.(4) REQUIRES THAT THE HOIST SHALL NOT BE LOADED BEYOND RATED LOAD.	LDE OPERATORS ARE TRAINED AND CERTIFIED. CRITICAL LIFT OPERATORS MUST BE TRAINED IN THE SPECIFIC HAZARDS AND SPECIAL PROCEDURES ASSOCIATED WITH THE LIFT.	REMOTE	CLOSED OPEN	• FMEA: NSI DOCUMENT NO. 40-01-647 • REVIEW PROCEDURES • INSPECTION • VERIFICATION OF CRITICAL LIFT OPERATOR CERTIFICATION. • CRITICAL LIFT PROCEDURE, DOCUMENT NO. _____

OPERATING AND SUPPORT HAZARD ANALYSIS (O&SHA) WORKSHEET

SYSTEM: BUILDING M-16 CATEGORY: CRITICAL APPLICATION PHASE: LIFTING OPERATION DATE: NOVEMBER 1995
SUBSYSTEM: DUFF-NORTON ONE-TON COFFING HOIST PREPARED BY: M. CROMPTON
CLOSURE CONCURRENCE: _____ PROJECT MANAGER _____ DEPUTY RECERT MANAGER

HAZARDOUS CONDITION	HAZARD CAUSE	HAZARD EFFECT	SEVERITY	SAFETY REQUIREMENTS	HAZARD ELIMINATION/ CONTROL PROVISIONS	LIKELIHOOD OF OCCURRENCE	STATUS	VERIFICATION METHOD
H14-UNPINNED TROLLEY	RETAINING PIN NOT IN PLACE	UNPLANNED MOTION OF TROLLEY/FLIGHT HARDWARE	CATASTROPHIC	ONLY CERTIFIED AND TRAINED OPERATORS SHALL BE AUTHORIZED TO OPERATE POWERED HOISTS IN ACCORDANCE WITH NSS/GO-1740.9B, PARA. 405.a. PARA. 405.b.(2) REQUIRES CRITICAL LIFT OPERATORS TO BE TRAINED IN THE SPECIFIC HAZARDS AND SPECIAL PROCEDURES ASSOCIATED WITH THE LIFT.	AN LDE OPERATOR TRAINING, EXAMINATION, AND LICENSING PROGRAM IS IN PLACE, IN ACCORDANCE WITH NSS/GO-1740.9B, PARA. 405.a. STANDING OPERATING PROCEDURE FOR OPERATOR DAILY INSPECTION AND TEST.	REMOTE	OPEN	• FMEA: NSI DOCUMENT NO. 40-01-647 • REVIEW PROCEDURES • INSPECTION • VERIFICATION OF CRITICAL LIFT OPERATOR CERTIFICATION. • CRITICAL LIFT PROCEDURE, DOCUMENT NO. _____
H15-LOAD BRAKE INCAPABLE OF HOLDING A LOAD	THE USE OF GEAR OILS OTHER THAN RECOMMENDED	LOSS (DAMAGE) OF FLIGHT HARDWARE	CATASTROPHIC	NSS/GO-1740.9B, PARA. 404 REQUIRES THAT A PREVENTATIVE MAINTENANCE PROGRAM BE ESTABLISHED. CMAA SPECIFICATION NO. 74 REQUIRES THAT THE CRANE BE LUBRICATED IN ACCORDANCE WITH CRANE MANUFACTURER'S RECOMMENDATION. MANUFACTURER'S RECOMMENDED LUBRICATION SCHEDULE IS PROVIDED IN PUBLICATION WR-1-680-1.	GSFC REQUIRES APPROVED, SPECIFIC, TECHNICAL INSPECTION PROCEDURES FOR LIFTING DEVICES AND EQUIPMENT. ONLY TRAINED AND AUTHORIZED PERSONNEL TO PERFORM MAINTENANCE WORK.	REMOTE	OPEN	• FMEA: NSI DOCUMENT NO. 40-01-647 • REVIEW PROCEDURES • INSPECTION • INSPECTION PROCEDURE, DOCUMENT NO. _____

OPERATING AND SUPPORT HAZARD ANALYSIS (O&SHA) WORKSHEET

SYSTEM: BUILDING M-16 CATEGORY: CRITICAL APPLICATION PHASE: LIFTING OPERATION DATE: NOVEMBER 1995
SUBSYSTEM: DUFF-NORTON ONE-TON COFFING HOIST PREPARED BY: M. CROMPTON
CLOSURE CONCURRENCE: _____ PROJECT MANAGER _____ DEPUTY RECERT MANAGER

HAZARDOUS CONDITION	HAZARD CAUSE	HAZARD EFFECT	SEVERITY	SAFETY REQUIREMENTS	HAZARD ELIMINATION/ CONTROL PROVISIONS	LIKELIHOOD OF OCCURRENCE	STATUS	VERIFICATION METHOD
H16-ROPE NOT SEATED IN GROOVE	SIDE PULL	WORN OUTSIDE WIRES	CATASTROPHIC	NSS/GO-1740.9B: • PARA. 406.b.(13) REQUIRES THAT THE HOIST NOT BE USED FOR SIDE PULLS. • PARA. 404 REQUIRES THAT A PREVENTATIVE MAINTENANCE PROGRAM BE ESTABLISHED. • PARA. 405.b.(2) REQUIRES CRITICAL LIFT OPERATORS TO BE TRAINED IN THE SPECIFIC HAZARDS AND SPECIAL PROCEDURES ASSOCIATED WITH THE LIFT. ONLY CERTIFIED AND TRAINED OPERATORS SHALL BE AUTHORIZED TO OPERATE POWERED HOISTS IN ACCORDANCE WITH NSS/GO-1740.9B, PARA. 405.a. MFG. DOES NOT APPLY WHERE DETERIORATION IS CAUSED BY ECCENTRIC OR SIDE LOADING.	GSFC REQUIRES APPROVED, SPECIFIC, TECHNICAL INSPECTION PROCEDURES FOR LIFTING DEVICES AND EQUIPMENT. AN LDE OPERATOR TRAINING, EXAMINATION, AND LICENSING PROGRAM IS IN PLACE, IN ACCORDANCE WITH NSS/GO-1740.9B, PARA. 405.a. STANDARD OPERATING PROCEDURE REQUIRED FOR OPERATOR TO PERFORM DAILY TEST AND INSPECTION.	REMOTE	OPEN	• FMEA: NSI DOCUMENT NO. 40-01-647 • REVIEW PROCEDURES • INSPECTION • VERIFICATION OF CRITICAL LIFT OPERATOR CERTIFICATION. • INSPECTION PROCEDURES, DOCUMENT NO. _____
H17-HOOK DOES NOT STOP PROMPTLY	EXCEEDED CAPACITY BRAKE NOT HOLDING	LOSS (DAMAGE) OF FLIGHT HARDWARE	CATASTROPHIC	NSS/GO-1740.9B: • PARA. 406.b.(4) REQUIRES THAT HOISTS SHALL NOT BE LOADED BEYOND RATED LOAD EXCEPT DURING AUTHORIZED TESTS. • PARA. 405.b.(2) REQUIRES CRITICAL LIFT OPERATORS TO BE TRAINED IN THE SPECIFIC HAZARDS AND SPECIAL PROCEDURES ASSOCIATED WITH THE LIFT. ONLY CERTIFIED AND TRAINED OPERATORS SHALL BE AUTHORIZED TO OPERATE POWERED HOISTS IN ACCORDANCE WITH NSS/GO-1740.9B, PARA. 405.a.	AN LDE OPERATOR TRAINING, EXAMINATION, AND LICENSING PROGRAM IS IN PLACE, IN ACCORDANCE WITH NSS/GO-1740.9B, PARA. 405.a. NSS/GO-1740.9B, PARA. 404 REQUIRES THAT A PREVENTATIVE MAINTENANCE PROGRAM BE ESTABLISHED. GSFC REQUIRES APPROVED, SPECIFIC, TECHNICAL INSPECTION PROCEDURES FOR LIFTING DEVICES AND EQUIPMENT.	REMOTE	OPEN	• FMEA: NSI DOCUMENT NO. 40-01-647 • REVIEW PROCEDURES • INSPECTION • VERIFICATION OF CRITICAL LIFT OPERATOR CERTIFICATION • INSPECTION PROCEDURES, DOCUMENT NO. _____

OPERATING AND SUPPORT HAZARD ANALYSIS (O&SHA) WORKSHEET

SYSTEM: BUILDING M-16 CATEGORY: CRITICAL APPLICATION PHASE: LIFTING OPERATION DATE: NOVEMBER 1995
SUBSYSTEM: DUFF-NORTON ONE-TON COFFING HOIST PREPARED BY: M. CROMPTON
CLOSURE CONCURRENCE: _____ PROJECT MANAGER _____ DEPUTY RECERT MANAGER

HAZARDOUS CONDITION	HAZARD CAUSE	HAZARD EFFECT	SEVERITY	SAFETY REQUIREMENTS	HAZARD ELIMINATION/ CONTROL PROVISIONS	LIKELIHOOD OF OCCURRENCE	STATUS	VERIFICATION METHOD
H18-GANTRY FAILURE	OVERLOAD	LOAD WILL DROP - COULD CAUSE DAMAGE TO FLIGHT HARDWARE	CATASTROPHIC	OSHA 1910.179 IS APPLICABLE TO ADJUSTABLE AND FIXED HEIGHT GANTRY CRANES. NSS/GO-1740.9B: • PARA. 406.b.(4) REQUIRES THAT HOISTS SHALL NOT BE LOADED BEYOND RATED LOAD EXCEPT DURING AUTHORIZED TESTS. • PARA. 405.c.(2) REQUIRES CRITICAL LIFT OPERATORS TO BE TRAINED IN THE SPECIFIC HAZARDS AND SPECIAL PROCEDURES ASSOCIATED WITH THE LIFT.	GSFC REQUIRES APPROVED TECHNICAL INSPECTION PROCEDURES FOR LIFTING DEVICES AND EQUIPMENT (LDE). AN LDE OPERATOR TRAINING, EXAMINATION, AND LICENSING PROGRAM IS IN PLACE, IN ACCORDANCE WITH NSS/GO-1740.9B, PARA. 405.a. POST CAPACITY ON GANTRY.	REMOTE	OPEN	• FMEA: NSI DOCUMENT NO. 40-01-647 • REVIEW PROCEDURES • INSPECTION • TECHNICAL INSPECTION PROCEDURES, DOCUMENT NO. _____ • REVIEW CRITICAL LIFT OPERATOR CERTIFICATION
H18-GANTRY FAILURE	DAMAGED, MISSING PARTS	LOAD WILL DROP - COULD CAUSE DAMAGE TO FLIGHT HARDWARE	CATASTROPHIC	OSHA 1910.179 IS APPLICABLE TO ADJUSTABLE AND FIXED HEIGHT GANTRY CRANES. PARA. 406.a. REQUIRES THAT ONLY CERTIFIED AND TRAINED OPERATORS SHALL BE AUTHORIZED TO USE/OPERATE LIFTING DEVICES.	CRITICAL LIFT REQUIREMENTS SHALL INCLUDE SPECIAL LIFT PROCEDURES. GSFC REQUIRES APPROVED TECHNICAL INSPECTION PROCEDURES FOR LIFTING DEVICES AND EQUIPMENT (LDE). AN LDE OPERATOR TRAINING, EXAMINATION AND LICENSING PROGRAM IS IN PLACE, IN ACCORDANCE WITH NSS/GO-1740.9B.	REMOTE	OPEN	• FMEA: NSI DOCUMENT NO. 40-01-647 • REVIEW PROCEDURES • INSPECTION • TECHNICAL INSPECTION PROCEDURES, DOCUMENT NO. _____ • REVIEW CRITICAL LIFT OPERATOR CERTIFICATION

OPERATING AND SUPPORT HAZARD ANALYSIS (O&SHA) WORKSHEET

SYSTEM: BUILDING M-16 CATEGORY: CRITICAL APPLICATION PHASE: LIFTING OPERATION DATE: NOVEMBER 1995
SUBSYSTEM: DUFF-NORTON ONE-TON COFFING HOIST PREPARED BY: M. CROMPTON
CLOSURE CONCURRENCE: _____ PROJECT MANAGER _____ DEPUTY RECERT MANAGER

HAZARDOUS CONDITION	HAZARD CAUSE	HAZARD EFFECT	SEVERITY	SAFETY REQUIREMENTS	HAZARD ELIMINATION/ CONTROL PROVISIONS	LIKELIHOOD OF OCCURRENCE	STATUS	VERIFICATION METHOD
H19-PAYLOAD COLLIDES WITH GANTRY SUPPORT MEMBERS	SWINGING LOAD	LOSS/DAMAGE OF FLIGHT HARDWARE	CATASTROPHIC	OSHA 1910.179 IS APPLICABLE TO ADJUSTABLE AND FIXED HEIGHT GANTRY CRANES. NSS/GO-1740.9B: • PARA. 405.c.(2) REQUIRES CRITICAL LIFT OPERATORS TO BE TRAINED IN THE SPECIFIC HAZARDS AND SPECIAL PROCEDURES ASSOCIATED WITH THE LIFT. • PARA. 406.a REQUIRES THAT ONLY CERTIFIED AND TRAINED OPERATORS SHALL BE AUTHORIZED TO USE/OPERATE LIFTING DEVICES.	AN LDE OPERATOR TRAINING, EXAMINATION AND LICENSING PROGRAM IS IN PLACE, IN ACCORDANCE WITH NSS/GO-1740.9B, PARA. 405.a. CRITICAL LIFT REQUIREMENTS SHALL INCLUDE SPECIAL LIFT PROCEDURES.	REMOTE	OPEN	• FMEA: NSI DOCUMENT NO. 40-01-647 • REVIEW PROCEDURES • INSPECTION • TECHNICAL INSPECTION PROCEDURES, DOCUMENT NO. _____ • REVIEW CRITICAL LIFT OPERATOR
H20-PERSONNEL STRUCK BY FALLING SUPPORT MEMBERS DURING GANTRY ASSEMBLY/DISASSEMBLY	UNSAFE MATERIAL HANDLING METHODS	PERSONNEL INJURY	CATASTROPHIC	OSHA 1910.179 IS APPLICABLE TO ADJUSTABLE AND FIXED HEIGHT GANTRY CRANES. NSS/GO-1740.9B: • PARA. 406.a REQUIRES THAT ONLY CERTIFIED AND TRAINED OPERATORS SHALL BE AUTHORIZED TO USE/OPERATE LIFTING DEVICES. • PARA 405.c.(2) REQUIRES CRITICAL LIFT OPERATORS TO BE TRAINED IN THE SPECIFIC HAZARDS AND SPECIAL PROCEDURES ASSOCIATED WITH THE LIFT.	AN LDE OPERATOR TRAINING, EXAMINATION AND LICENSING PROGRAM IS IN PLACE, IN ACCORDANCE WITH NSS/GO-1740.9B, PARA. 405.a. CRITICAL LIFT REQUIREMENTS SHALL INCLUDE SPECIAL LIFT PROCEDURES. DOCUMENT ASSEMBLY/DISASSEMBLY PROCEDURES BASED ON MANUFACTURER'S RECOMMENDATIONS.	REMOTE	OPEN	• FMEA: NSI DOCUMENT NO. 40-01-647 • REVIEW CRITICAL LIFT OPERATOR CERTIFICATION. • CRITICAL LIFT PROCEDURE DOCUMENT NO. _____ • GANTRY ASSEMBLY/DISASSEMBLY PROCEDURES

OPERATING AND SUPPORT HAZARD ANALYSIS (O&SHA) WORKSHEET

SYSTEM: BUILDING M-16 CATEGORY: CRITICAL APPLICATION PHASE: LIFTING OPERATION DATE: NOVEMBER 1995
SUBSYSTEM: DUFF-NORTON ONE-TON COFFING HOIST PREPARED BY: M. CROMPTON
CLOSURE CONCURRENCE: _____ PROJECT MANAGER _____ DEPUTY RECERT MANAGER

HAZARDOUS CONDITION	HAZARD CAUSE	HAZARD EFFECT	SEVERITY	SAFETY REQUIREMENTS	HAZARD ELIMINATION/ CONTROL PROVISIONS	LIKELIHOOD OF OCCURRENCE	STATUS	VERIFICATION METHOD
H21- UNCOMMANDED PAYLOAD MOVEMENT	LACK OF TROLLEY STOPS SWIVEL LOCK CASTERS UNLOCKED UNPINNED TROLLEY	LOSS/DAMAGE OF FLIGHT HARDWARE, PERSONNEL INJURY	CATASTROPHIC	OSHA 1910.179 IS APPLICABLE TO ADJUSTABLE AND FIXED HEIGHT GANTRY CRANES. NSS/GO-1740.9B: • PARA. 406.a REQUIRES THAT ONLY CERTIFIED AND TRAINED OPERATORS SHALL BE AUTHORIZED TO USE/OPERATE LIFTING DEVICES. • PARA. 405.c.(2) REQUIRES CRITICAL LIFT OPERATORS TO BE TRAINED IN THE SPECIFIC HAZARDS AND SPECIAL PROCEDURES ASSOCIATED WITH THE LIFT.	AN LDE OPERATOR TRAINING, EXAMINATION AND LICENSING PROGRAM IS IN PLACE, IN ACCORDANCE WITH NSS/GO-1740.9B, PARA. 405.a. CRITICAL LIFT REQUIREMENTS SHALL INCLUDE SPECIAL LIFT PROCEDURES. STANDARD OPERATING PROCEDURE REQUIRED FOR DAILY OPERATOR TEST AND INSPECTION.	REMOTE	OPEN	• FMEA: NSI DOCUMENT NO. 40-01-647 • REVIEW CRITICAL LIFT OPERATOR CERTIFICATION • CRITICAL LIFT PROCEDURE NO. _____

SECTION 7 - CONTROL LOGIC ANALYSIS

There are no control/monitor functions associated with this lifting system. No control logic analysis was, therefore, performed.

SECTION 8 - EMERGENCY SAFING ANALYSIS

This system is not controlled by a computer control system. No emergency safing analysis is, therefore, required.

SECTION 9 - SNEAK CIRCUIT ANALYSIS

The methodology for the control of sneak circuits is not implemented in the design of this lifting system. No sneak circuit analysis is, therefore, performed.

SECTION 10 - RECOMMENDATIONS

- Perform test and inspection of the hoist transmission in accordance with the Critical Item Acceptance Rationale sheets and the manufacturer's recommended inspection and maintenance check list.

- Document applicable inspection procedures to provide specific instructions pertinent to the hoist transmission.

- Perform test and inspections of the hazardous conditions identified in the O&SHA in accordance with the Hazard Elimination/Control Procedures.

- Only certified and trained operators shall be authorized to operate the powered hoist.

- Critical lift operators must be trained in the specific hazards and special procedures associated with the lift, including those identified herein. The critical lift procedures should contain the cautions listed.

- Document the following procedures and enter the Document No. in the O&SHA under the applicable Verification Method.

  - Emergency procedures for contingency actions such as transmission failure, limit switch failure, fire, speed control failure or other O&SHA emergencies.

  - Approved specific, technical inspection procedures for lifting devices or equipment with particular emphasis to the hoist transmission.

  - Critical lift procedure

- Perform proof load tests and rated load tests in accordance with NSS/GO-1740.9B, Para. 402.a and 402.b, respectively.

- Operator/maintenance personnel must follow OEM instructions for gantry adjustment, assembly and disassembly.

- Track the required corrective actions and maintain the Hazardous Condition "Status" on the O&SHA Worksheet - current. Document closure date. Document the corrective actions and provide as an attachment.

- Update this analysis, as required, to reflect any changes in operation, hoist configuration, or facility improvements.

- Perform an analysis of the facility environment-human relationship that could cause potential sources of danger. Combine this analysis with the O&SHA, herein, to develop the Systems Hazard Analysis (SHA).