**********
* NSI
*
*Document # 40-01-661
**********

# FAILURE MODES AND EFFECTS ANALYSIS (FMEA) AND OPERATING AND SUPPORT HAZARD ANALYSIS (O&SHA) OF THE 1-1/2 TON MANUAL HOIST/PLAIN TROLLEY BUILDING M-20 WALLOPS FLIGHT FACILITY

NSI Document No.

40-01-661

October 1996

PREPARED BY: Mel Crompton 10.1.96
M. Crompton, Project Engineer, Recertification Support, NSI — Date

APPROVED BY: A. G. Zorn 10-1-96
A. Zorn, Manager, Recertification Support, NSI — Date

APPROVED BY: 10/1/96
S. Chan, RECERT Manager, Code 750, NASA/GSFC — Date

RECERT Support
NSI Technology Services Corporation
A Subsidiary of ManTech International Corporation
Goddard Space Flight Center
Greenbelt, Maryland 20771

Enclosure 2

TABLE OF CONTENTS

Page

LIST OF FIGURES . . . . . iii

LIST OF ABBREVIATIONS AND ACRONYMS . . . . . iv

SECTION 1 - SUMMARY OF FINDINGS . . . . . 1

1.1 System Criticality . . . . . 1

1.2 Mechanical Critical Items . . . . . 1

1.3 Electrical Critical Items . . . . . 2

1.4 Critical Flex Hose . . . . . 2

1.5 Critical Orifices . . . . . 2

1.6 Critical Filters . . . . . 2

1.7 Criticality Category 1R Items . . . . . 2

1.8 Requirements of NSS/GO-1740.9B . . . . . 2

1.9 Recommendations . . . . . 3

1.10 Critical Control/Monitor Functions . . . . . 3

1.11 Sneak Circuits Identified . . . . . 3

SECTION 2 - SYSTEM SUMMARY . . . . . 3

2.1 Documentation List . . . . . 3

2.2 System Description . . . . . 4
2.2.1 Hand Chain Hoist . . . . . 4

SECTION 3 - DEFINITIONS AND GROUND RULES . . . . . 5

3.1 Definitions . . . . . 5

3.2 Ground Rules . . . . . 8

SECTION 4 - CRITICALITY ASSESSMENT . . . . . 9

4.1 Purpose . . . . . 9

4.2 Criticality Assessment Worksheet . . . . . 9

SECTION 5 - FAILURE MODES AND EFFECTS ANALYSIS AND CIL . . . 11

5.1 Mechanical FMEA Worksheets and Block Diagrams . . . . . 11

5.2 Electrical FMEA Worksheets and Block Diagrams . . . . . 23

5.3 Flex Hose FMEA Worksheets . . . . . 23

5.4 Orifice FMEA Worksheets . . . . . 23

5.5 Filter FMEA Worksheets . . . . . 23

5.6 Requirements of NSS/GO-1740.9B . . . . . 23

5.7 Critical Items List . . . . . 24
5.7.1 Critical Item Acceptance Rationale Sheets . . 24

SECTION 6 - OPERATING AND SUPPORT HAZARD ANALYSIS (O&SHA) . . 31

6.1 Objectives . . . . . 31

6.2 O&SHA Worksheets . . . . . 31

SECTION 7 - CONTROL LOGIC ANALYSIS . . . . . 36

SYSTEM 8 - EMERGENCY SAFING ANALYSIS . . . . . 36

SECTION 9 - SNEAK CIRCUIT ANALYSIS . . . . . 36

SECTION 10 - RISK ASSESSMENT . . . . . 36

SECTION 11 - RECOMMENDATIONS . . . . . 38

# LIST OF FIGURES


| Figure | Title | Page |
|---|---|---|
| 1 | CTH Aluminum Hand Chain Hoist | 12 |
| 2 | Exploded Illustration of Model CTH Hoist | 13 |
| 3 | Parts List | 14 |
| 4 | Building M-20 Roof Framing Plan | 17 |
| 5 | Building M-20 Hoist | 18 |
| 6 | GSFC Recertification Hazard Severity Levels Versus Likelihood of Occurrence for Risk Assessment | 37 |

# LIST OF ABBREVIATIONS AND ACRONYMS

| | |
|---|---|
| AGMA | American Gear Manufacturers Association |
| ANSI | American National Standards Institute |
| CAT | Category |
| CIL | Critical Items List |
| CMAA | Crane Manufacturers Association of America, Inc. |
| F/H | Flight Hardware |
| FMEA | Failure Modes and Effects Analysis |
| GSE | Ground Support Equipment |
| LDE | Lifting Devices and Equipment |
| NASA | National Aeronautics and Space Administration |
| NFPA | National Fire Protection Association |
| NHB | NASA Handbook |
| NSTS | National Space Transportation System |
| OEM | Original Equipment Manufacturer |
| O&SHA | Operating and Support Hazard Analysis |
| REV. | Revision |
| SFP | Single Failure Point |
| SHA | System Hazard Analysis |
| WFF | Wallops Flight Facility |

# SECTION 1 - SUMMARY OF FINDINGS

## 1.1 System Criticality

The lifting system to be installed in Building M-20 at the Wallops Flight Facility consists of a Coffing CTH, Aluminum, one and one-half ton Hand Chain Hoist/plain trolley secured to connecting hardware and roof structural members. The chain hoist will be used to handle PEGASUS flight hardware (F/H). A catastrophic failure of the chain hoist could cause personnel injury, damage, or loss of F/H. Therefore, this lifting system is assessed as Critical.

## 1.2 Mechanical Critical Items

There were eight Critical Items identified by this analysis. These items, defined as Single Failure Points (SFP) in accordance with NSTS 22206, Revision D, are listed below. Refer to Section 5.1, the Mechanical FMEA Worksheets, for further detail.

| Part Name | Critical Failure Mode | Criticality Category |
|---|---|---|
| Disc Brake | Fails to engage, due to excessive wear/glazing of the brake disc | 2 |
| Pawl Assembly | Fails to engage due to structural failure caused by excessive wear, corrosion, spring failure | 2 |
| Ratchet Assembly | Fails to engage due to wear, bearing binding | 2 |
| Gear | Structural Failure due to overloading | 2 |
| Pinion Shaft | Structural Failure due to overloading | 2 |
| Brake Hub | Slipping under load due to excessive wear, scoring | 2 |
| Load Sheave | Structural failure due to overloading | 2 |
| Plain Trolley | Structural failure due to overloading | 2 |

NOTE: The Criticality Category is defined in Paragraph 3.1.

The technical rationale for retaining the mechanical Critical Items is documented in Paragraph 5.7.1. In summary, the hoist is of high quality, off-the-shelf, OEM type equipment which

meets the requirements of NSS/GO-1740.9B. A periodic test, inspection, and maintenance program will be in place to ensure safe operation with minimum risk to personnel and/or damage to flight hardware/facility. Risk assessment was performed in accordance with RECERT-42-011. The controls are considered to be in place after Verification Actions are closed for accepting residual risks. The overall risk assessment is evaluated as follows:

Hazard Severity Level: Catastrophic
Likelihood: Remote
Risk: Acceptable (Uncertainties Controlled/Managed)

Lacking the closure of any of the Verification Actions by the Project Office, the overall risk assessment would be voided.

1.3 Electrical Critical Items

There are no electrical items associated with the one-half ton hand chain hoist.

1.4 Critical Flex Hose

There are no flex hoses associated with this equipment.

1.5 Critical Orifices

There are no orifices associated with this equipment.

1.6 Critical Filters

There are no filters associated with this equipment.

1.7 Criticality Category 1R Items

There were no Criticality IR items identified in the critical output functions in Section 4.

1.8 Requirements of NSS/GO-1740.9B

Performance of the FMEA for the one and one-half ton hand chain hoist verified compliance to the requirements of NSS/GO-1740.9B, "NASA Safety Standard for Lifting Devices and Equipment." Safe application of the hand chain hoist is the subject of the following paragraphs reproduced from the hoist manufacturer's, Duff-Norton, Publication No. CB-680-7, "Operating & Maintenance Instructions":

1.5 **APPLICATION INFORMATION**

This hoist is intended for general industrial use for lifting, pulling, and tensioning-type applications within its rated load. Prior to installation and operation, the user should review his application for abnormal environmental or handling conditions and to

observe the applicable recommendations as follows:

a. **Adverse Environmental Conditions** Do not use the hoist in areas containing flammable vapors, liquids, gases or any combustible dusts or fibers. Refer to Article 500 of *The National Electric Code*. Do not use this hoist in highly corrosive or abrasive environments. Do not use this hoist in applications involving extended exposure to ambient temperatures below -10°F or above 130°F.

b, **Lifting of Hazardous Loads** This hoist is not recommended for use in lifting or transporting hazardous loads or materials which could cause wide-spread damage if dropped. The lifting of loads which could explode or create chemical or radioactive contamination if dropped requires fail-safe redundant supporting devices which are not incorporated into this hoist.

1.9 Recommendations

Close all items in the O&SHA "Verification Action" column to mitigate and control the hazardous conditions as listed. Additional recommendations are summarized in Section 11.

Performance of the FMEA and O&SHA and resultant risk assessment conclusions support the manufacturer's instructions pertinent to the significance of periodic test, inspection, maintenance and operator training. Implementation of the Verification Actions provides control and mitigation of the hazardous conditions listed.

1.10 Critical Control/Monitor Functions

There are no control/monitor functions associated with this hand chain hoist.

1.11 Sneak Circuits Identified

There was no Sneak Circuit Analysis performed for this system.

SECTION 2 - SYSTEM SUMMARY

2.1 Documentation List

The following documents were used in completing this analysis:

| Document | Rev. | Title |
|---|---|---|
| NSS/GO-1740.9 | B | NASA Safety Standard for Lifting Devices and Equipment |
| NSTS 22206 | D | Requirements for Preparation and Approval of Failure Modes and Effects Analysis (FMEA) and Critical Items List (CIL) |
| Publication Part No. CB-680-7 | | Duff-Norton Operating and Maintenance Instructions with Parts List |
| ANSI/ASME HST-2M-1983 | | Performance Standard for Hand Chain Manually Operated Chain Hoists |
| 29 CFR 1910.179 | | Department of Labor. Occupational Safety and Health Administration (OSHA), Occupational Safety and Health Standards |
| NHB 1700.1(V1-B) | | NASA Safety Policy and Requirements Document |
| RECERT-42-011 | | A Standard Operating Procedure for Preparation of a Request for a Waiver/Deviation to the Mandatory Requirements of NSS/GO-1740.9B, "NASA Safety Standard for Lifting Devices and Equipment" |
| WFF Facilities Management Branch | | Structural Analysis of Roof Truss and Monorail Structure at Building M-20 |

## 2.2 System Description

The lifting system to be installed in Building M-20 consists of a Coffing CTH manual chain hoist with push/pull trolley secured to connecting hardware and roof structural members. The function of the chain hoist will be to handle PEGASUS flight hardware.

### 2.2.1 Hand Chain Hoist

The hand chain hoist has an aluminum housing for portability. The hoist is equipped with aluminum hand chain. The hook, load wheel, and load chain are stainless steel. The Hand Chain Wheel is one piece construction of aluminum alloy. The hoist is equipped with a push/pull type trolley. Trolley wheels are stainless. Hoist specifications follow:

| | |
|---|---|
| Rated Load (lbs.) . . . . . | 3,000 |
| Lift Height (feet) . . . . . | 12 |
| Feet of Chain overhauled to lift load one foot . . . | 58 |
| Chain Pull in lbs. to lift rated load . . . . . | 62 |

## SECTION 3 - DEFINITIONS AND GROUND RULES

### 3.1 Definitions

Component - A combination of parts, devices, and structures, usually self-contained, which perform a distinctive function in the operation of the overall equipment. A "black box" (e.g., transmitter, power supply, cryogenic pump, filter assembly).

Correcting Action - An identification of actions, automatic or manual, which could be taken to mitigate the effect of failure.

Critical Item - A critical item is defined as any one of the following:

1. A Criticality Category 1, 1S, or 2 Single Failure Point.
2. A redundant hardware item where the second failure results in loss of life or F/H and the item cannot be checked out during normal ground operations (i.e., a single fault tolerant item which fails Redundancy Screen A).

Critical Items List (CIL) - The CIL represents an analysis of the hardware design, highlighting those items which do not meet the requirements of the applicable codes and standards.

Critical Lifting Device - A device (crane, hoist, etc.) whose potential failure or malfunction (loss of control, dropping a load, etc.) could cause loss of life, damage to flight hardware, damage to major facility or mission support equipment, or seriously delay the objectives of a program.

Critical Lifts - involve lifting and lowering operations with special, high dollar items, such as spacecraft, one-of-a-kind articles, or major facility components, etc., whose loss would have serious programmatic impact. Critical lifts also include operations with special personnel and equipment safety concerns beyond normal lifting hazards.

Critical System - A system is assessed as Critical if loss of overall system function or improper performance of a system function could result in loss of life, damage or loss of flight hardware or facilities.

Criticality - The relative measure of the consequences of a failure mode.

Criticality Categories

| Criticality | Potential Effect or Failure |
|---|---|
| 1 | Single failure which could result in loss of life or flight hardware. |
| 1R | Two redundant hardware items, which if both failed, could result in loss of life or flight hardware (or loss of a safety or hazard monitoring system). |
| 1S | Single failure in a safety or hazard monitoring system that could cause the system to fail to detect, combat, or operate when needed during the existence of a hazardous condition and could result in loss of life or flight hardware. |
| 2 | Single failure which could result in loss (damage) of a flight hardware system or personnel injury. |
| 3 | All others. |

Criticality Assessment - An analysis of each system function to determine if loss or improper performance of the function could result in loss of life/injury and/or damage to flight hardware or facilities.

Fail Safe - The ability to sustain a failure without causing loss of load or damage to the load. (Includes the capability to safe the lifting device and successfully terminate operations.)

Failure - The inability of a system, subsystem, component, or part to perform its required function within specified limits, under specified conditions for a specified duration.

Failure Effect - A description of the "worst case" effect for each failure mode.

Failure Mode - A description of the manner in which an item can fail.

Function - The activity or operation that a part, component, or system must perform to accomplish its intended purpose.

Hazard - Existing or potential condition that can result in or contribute to a mishap.

Hazard Report Status -

1. Closed - Corrective action/evaluation has been completed and documented.

2. Open - Corrective measurement/procedural hazard controls are not in place, or evaluation is pending.

Interface - The point or area where a relationship exists between two or more parts, systems, programs, persons, or procedures wherein physical and/or functional compatibility is required.

Likelihood of Risk Occurrence -

Probable - expected to happen
Occasional - could happen
Remote - not expected to happen

Loss of Lifting Device - Loss of the capability to provide the level of device performance required for normal or emergency operations.

Passive Component - A component that may be necessary to the performance or structural integrity of the system but has no active function.

Redundancy - Multiple ways of performing a function.

1. Operational Redundancy - Redundant elements, all of which are fully energized during the subsystem operating cycle. Operational redundancy includes load sharing redundancy wherein redundant elements are connected in such a manner that, upon failure of one unit, the remaining redundant elements will continue to perform the subsystem function. Switching out the failed element is not required.

2. Standby Redundancy - Redundant hardware items that are nonoperative until they are switched into the subsystem upon failure of the primary items. Switching can be accomplished by either automatic or manual means.

3. Like Redundancy - Identical hardware items performing the same function.

4. Unlike Redundancy - Nonidentical hardware items performing the same function. Safety features which provide protection for specific failure modes are considered as unlike redundancy for that failure mode; i.e., relief valves which provide protection against overpressurization after failure of a regulator.

Risk -

1. Unacceptable Risk - Uncertainties Exist. Further action will be required to reduce the risk to an acceptable level;

2. Acceptable Risk - Minor Uncertainties Exist. The level of risk from the activity is assessed to be sufficiently low to approve the activity; and

3. Acceptable Risk - Uncertainties Controlled/Managed. The in-place controls have significantly reduced the risk level such that hazard occurrence is not expected to happen.

Risk Severity Level -

Marginal - a hazard that could result in a mishap or minor mishap inflicting first-aid injury to personnel, and/or damage to flight hardware or ground equipment which can be tolerated or repaired without significant program delay.

Critical - a hazard that could result in serious injury to personnel and/or damage to flight hardware or ground equipment which could cause a significant program delay.

Catastrophic - a hazard that could result in a mishap causing fatal injury to personnel and/or loss of one or more major elements of the flight hardware or ground facility.

Safety or Hazard Monitoring System - A system whose function is to detect or combat a hazardous situation which has occurred because of prior failures or events during hazardous operations.

Single Failure Point (SFP) - A single item of hardware, the failure of which could result in loss of life or damage to a flight hardware system.

Variance - Documented and approved permission to perform some act contrary to established requirements.

Waiver - A variance that authorizes departure from a particular safety requirement, where an increased level of risk has been accepted.

## 3.2 Ground Rules

The analysis shall assess all active components between the load hook and the nearest brake since failure of these components could result in dropping the load. The following ground rules shall be used:

3.2.1 The brake shall be identified as a Single Failure Point, in the event the hoist has only one brake and the criticality shall be assigned based on the worst-case effect of its failure. An eddy current brake shall not be considered capable of holding the load.

3.2.2 The method of shaft attachment shall be analyzed. The shaft attach points shall be considered passive, in the event that the shaft is welded or

physically attached to the drum by a method approved by hoisting standards.

3.2.3 Bearings on drums and shafts shall be analyzed only to determine if the bearings can fail and drop the load.

3.2.4 Gear boxes, speed reducers, and couplings shall be considered Single Failure Points in the event that they are located between the drum and nearest brake.

3.2.5 Redundant items with control circuitry must be analyzed to determine whether or not a single credible failure can affect the controls for both redundant components.

3.2.6 Passive components will not be analyzed in the FMEA. The current list of passive components includes the hook, load block, wire rope, and sheaves.

3.3 Document worst case failure effects for every identified failure mode.

## SECTION 4 - CRITICALITY ASSESSMENT

### 4.1 Purpose

The purpose of a lifting system criticality assessment is to assess each subsystem function to determine if loss or improper performance of the function could result in loss of life and/or load or damage to the lifting system. The assessment is performed without regard to redundancy. System functions are identified as either Critical or non-Critical.

### 4.2 Criticality Assessment Worksheet

The one and one-half ton Hand Chain Hoist subsystems are assessed on the following Criticality Assessment Summary Sheet.

SYSTEM CRITICALITY ASSESSMENT SUMMARY WORKSHEET

LIFT SYSTEM: ONE AND ONE-HALF-TON HAND CHAIN HOIST

LOCATION: BUILDING M-20

PREPARED BY: M. CROMPTON

DATE: SEPTEMBER 1996

| SUBSYSTEM | FUNCTION | TIME PERIOD | EFFECT OF LOSS/FAILURE | CRITICALITY CATEGORY | NOTE |
|---|---|---|---|---|---|
| MANUAL CHAIN HOIST MOTION - UP/DOWN | RAISE/LOWER LOAD | PRE/POST TEST LIFTING OPERATIONS | A CATASTROPHIC FAILURE OF THE HOIST SYSTEM - COULD CAUSE DAMAGE TO FLIGHT HARDWARE | C | |
| PUSH/PULL TYPE TROLLEY | LATERAL MOVEMENT OF THE LOAD | PRE/POST TEST LIFTING OPERATIONS | A CATASTROPHIC FAILURE OF THE TROLLEY COULD CAUSE DAMAGE TO FLIGHT HARDWARE | C | |
| STRUCTURAL SUPPORT | SECURES CHAIN HOIST TO ROOF STRUCTURE SUPPORTING MEMBERS | PRE/POST TEST LIFTING OPERATIONS | A CATASTROPHIC FAILURE OF THE STRUCTURAL SUPPORT COULD CAUSE DAMAGE TO FLIGHT HARDWARE | C | ASSESSMENT INCLUDED AS PART OF THE OPERATING AND SUPPORT HAZARD ANALYSIS |

C = Critical
NC = Not Critical

# SECTION 5 - FAILURE MODES AND EFFECTS ANALYSIS AND CIL

## 5.1 Mechanical FMEA Worksheets and Block Diagrams

The mechanical components of the chain hoist documented in Section 4 were identified from the documents and diagrams referenced in the Documentation List. An analysis of these components was performed and documented on the following FMEA worksheets. Index numbers are referenced to item numbers, see "Parts List," page 14. A current list of passive components follows:

Passive Components

- Hook
- Load Block
- Hand Chain
- Sheaves
- Structural components are not analyzed as part of this analysis. Such items that constitute a safety concern shall be considered in the Operating and Support Hazard Analysis which is included herein.

The following Figures illustrate the one and one half ton Coffing hand chain hoist, connecting hardware, and roof structure supporting members.

Figure 1: CTH Aluminum Hand Chain Hoist
Figure 2: Exploded Illustration of Model CTH Hoist
Figure 3: Parts List
Figure 4: Building M-20 Roof Framing
Figure 5: Truss Diagram
Figure 6: GSFC Recertification Hazard Severity Levels Versus Likelihood of Occurrence for Risk Assessment

Additional details are provided in the referenced analysis of existing structure and connections.

# COFFING® TROLLEY HOISTS

# ½ TO 6 TONS

## CTH MODELS

- Capacities from ½ to 6 tons.
- Close headroom design.
- Plain or geared trolley.
- Optional capacity limiter prevents lifting damaging overloads (no extra cost).
- Load chains are electric welded, heat-treated alloy steel for strength and wear-resistance.
- Fully-enclosed, self-adjusting load brake is a friction-type screw and disc design that ensures positive control with a minimum of attention.
- Exclusive Superoxid® gearing is made from alloy steel forgings, with machine-cut teeth which provide more teeth to support the load and reduces maintenance cost with fewer wearing parts. Unique right-angle drive provides superior performance.
- Lightweight rugged aluminum alloy housing provides extra strength and compact size.
- Designed for freedom from maintenance, portability and efficiency. Hoist can be dismantled easily with simple hand tools and is easy to carry, rig and use.
- Standard 8-foot lift. Longer lifts available.
- For Bullard hooks, bronze hooks, zinc-plated chain & hooks, consult factory.

The Coffing Trolley Hoist is a CB hoist built integral with a CT trolley, resulting in better headroom than is obtainable with a standard trolley and hoist. Army-type trolley hoist design.

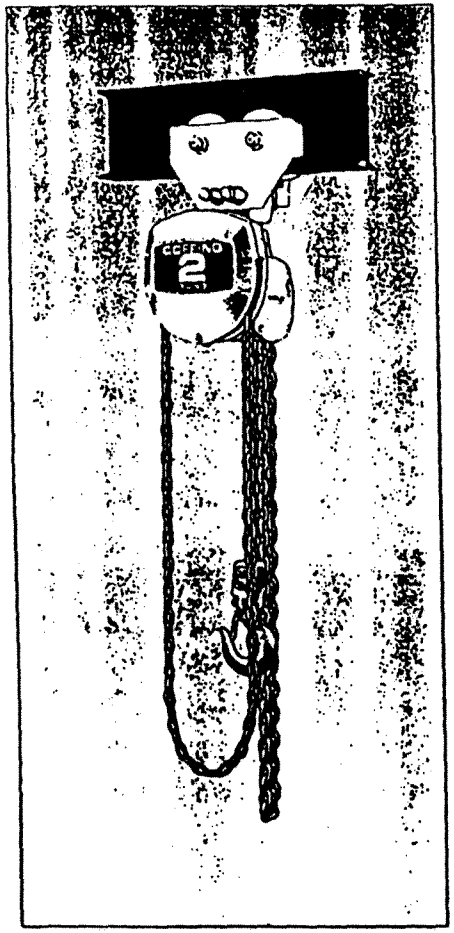

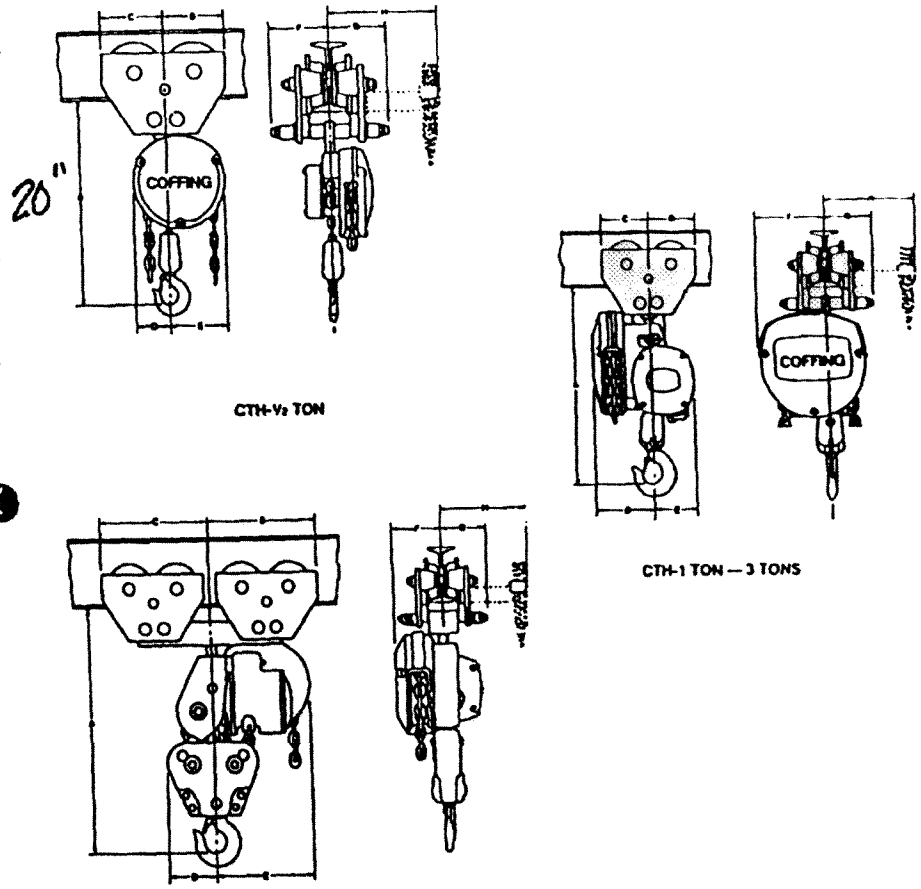


CTH-½ TON

CTH-1 TON — 3 TONS

CTH-4 TON — 6 TONS

### SPECIFICATIONS

| Rated Load (Lbs.) | Standard Lift (Ft.) | Standard Beam Height (In.) | Chain Pull To Lift Load† (Lbs.) | Hand Chain Overhaul†† (Ft.) | Minimum Headroom (In.) | Minimum Radius Beam (In.) | Model Number* |
|---|---|---|---|---|---|---|---|
| 1000 | 8 | 6-10 | 58 | 18 | 14 | 48 | CTH-½ |
| 2000 | 8 | 6-10 | 58 | 38 | 14¾ | 48 | CTH-1 |
| 3000 | 8 | 6-10 | 62 | 58 | 18¼ | 48 | CTH-1½ |
| 4000 | 8 | 6-10 | 83 | 58 | 18¼ | 48 | CTH-2 |
| 6000 | 8 | 6-10 | 91 | 85 | 20 | 48 | CTH-3 |
| 8000 | 8 | 6-10 | 85 | 116 | 27 1/16 | ** | CTH-4 |
| 10000 | 8 | 6-10 | 72 | 174 | 27¼ | ** | CTH-5 |
| 12000 | 8 | 6-10 | 87 | 174 | 27¼ | ** | CTH-6 |

NOTE: * When ordering, specify "P" for plain trolley or "G" for geared trolley.
— For straight track only. Articulated model for 48 inch minimum radius curved track available.
— Standard hand chain drop 8 ft.
— For wide flange and patented track applications, consult factory.
† Chain pull in pounds to lift rated load.
†† [illegible]

### DIMENSIONS

| Model | A | B | C | D | E | F | G | H |
|---|---|---|---|---|---|---|---|---|
| CTH½ | 14 | 5 9/16 | 5 9/16 | 2 7/16 | 5 3/16 | 5 1/16 | 5 1/2 | 7 7/16 |
| CTH1 | 14 9/16 | 5 9/16 | 5 9/16 | 5 1/16 | 3 7/16 | 5 1/16 | 5 1/16 | 7 7/16 |
| CTH1½ & 2 | 18 9/16 | 5 9/16 | 5 9/16 | 6 | 4 9/16 | 6 9/16 | 5 9/16 | 7 7/16 |
| CTH3 | 20 | 6 | 6 | 6 1/2 | 5 1/2 | 7 1/16 | 5 9/16 | 7 7/16 |
| CTH4 | 27 9/16 | 12 1/2 | 12 1/2 | 3 | 10 9/16 | 8 | 5 9/16 | 8 7/16 |
| CTH5 & 6 | 27 9/16 | 12 1/2 | 12 1/2 | 4 1/16 | 10 9/16 | 8 | 5 9/16 | 8 7/16 |

Note: Where clearance dimensions are critical request certified prints.

FIGURE 1
CTH ALUMINUM HAND CHAIN HOIST

The following exploded drawings provide a complete list of parts used in the standard CB hoist (shown in Table 1). Since different models and capacities are covered by this manual the item number and parts list will show each different part number with sufficient information to allow the selection of the correct part number.

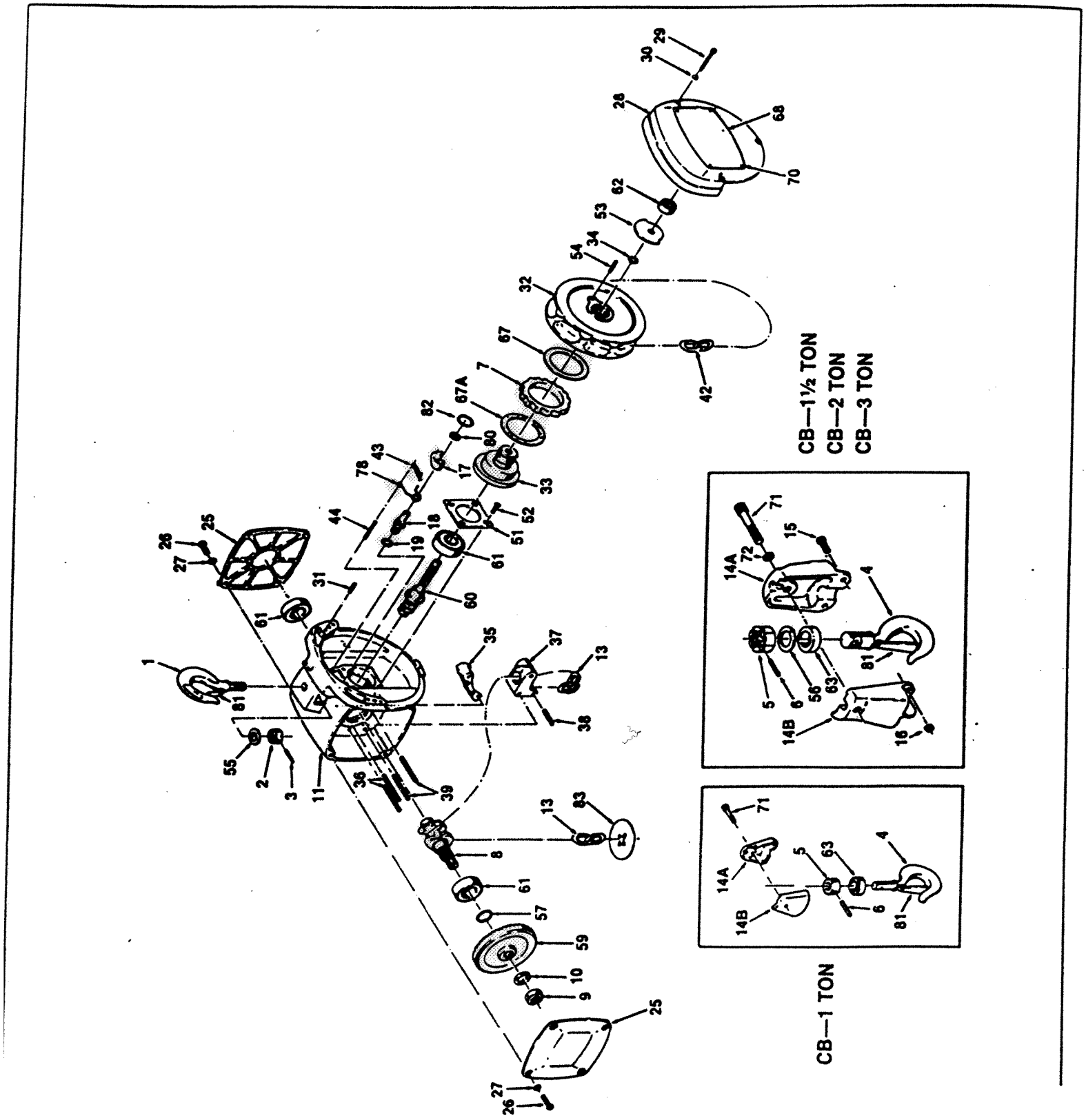


FIGURE 2
EXPLODED ILLUSTRATION

## 6.2 DESIGN SERIES

This letter indicates design series and will change with each major modification affecting interchangeability of parts. The following is review of all major design series.

### a. DESIGN SERIES B

Starting with this design series the hoist brake components were changed to give easier lowering effort on hand chain pull. This design series will be recognized by the 2½ inch inside diameter of the brake disc. The new brake parts are not individually interchangeable with old parts. The parts affected are:

| Item No. | Part Name | Old Part No. | New Part No. |
|---|---|---|---|
| 32 | Hand Chain Wheel | CB-33-2 | CB-33-7 |
| | | CB-33-1 | CB-33-6 |
| 7 | Ratchet Assembly | CB-901-2 | CB-7-3 |
| 33 | Brake Hub | CB-34 | CB-34-5 |
| 67 | Brake Disc Front | CB-580-2 | CB-580-6 (metal) |
| 67A | Brake Disc Rear | CB-580-2 | CB-580-6 (metal) |

For change-over to the new assembly specify kit No.
CB-910-1K For 1 Ton
CB-910-2K For 1½ thru 12 Ton inclusive.

### b. DESIGN SERIES "D"

Starting with this design series the housing, covers and some other components were changed. The new parts are not interchangeable with old parts.

| Item No. | Part name | Old Part No. | New Part No. |
|---|---|---|---|
| 11 | Housing | CB-18-3 | CB-18-4 |
| | | CB-18-1 | CB-18-5 |
| | | CB-18-2 | CB-18-6 |
| 28 | Handwheel Cover | CB-32-2 | CB-32-4 |
| | | CB-32-1 | CB-32-5 |
| 25 | Side Covers | CB-31 | CB-31-3 |
| | | CB-31-1 | CB-31-4 |
| | | CB-31-2 | CB-31-5 |
| 68 | Capacity Plates | CB-675-10 | CB-683-1 |
| | | CB-675 | CB-683-2 |
| | | CB-675-1 | CB-683-4 |
| | | CB-676-6 | CB-683-5 |
| | | CB-675-4 | CB-683-6 |
| | | CB-765-2 | CB-683-7 |
| | | CB-675-3 | CB-683-3 |
| | | CB-675-7 | CB-683-8 |
| | | CB-675-5 | CB-683-9 |

### c. DESIGN SERIES "E"

Starting with this design series the hoist brake disc and rachet assembly were changed to a one-part design.

| Item No. | Part Name | Old Part No. | New Part No. |
|---|---|---|---|
| 33 | Brake Hub | CB-34-3 | CB-34-4 |
| 7 | Ratchet Assembly | CB-902-3 | CB-901-4 |
| 67 | Brake Disc Front | CB-580-5 | Included in CB-901-4 |
| 67A | Brake Disc Rear | CB-580-4 | Included in CB-901-4 |

### d. DESIGN SERIES "F"

Starting with this design series the pawl stud and pawl retention method was changed.

| Item No. | Part Name | Old Part No. | New Part No. |
|---|---|---|---|
| 18 | Pawl Stud | CB-26-3 | CB-26-3RP |
| 82 | Cotter Pin | H-5025 | |
| 82 | Retaining Ring | | H-5568 |

CB-26-3RP includes retaining ring H-5568 and is available for repair of all design series.

### e. DESIGN SERIES "G" 40-01-661

This design series affects the CB-3, CB-10 and CB-12 only.

| Item No. | Part Name | Old Part No. | New Part No. |
|---|---|---|---|
| 8 | Load Sheave | CB-16-2 | CB-16-7 |
| 13 | Load Chain | CB-19 | 19J3 |

The new part numbers are interchangeable with old and can be used on all design series.

### f. DESIGN SERIES "H"

Starting with this design series ratchet assembly and brake was redesigned.

| Item No. | Part Name | Old Part No. | New Part No. |
|---|---|---|---|
| 33 | Brake Hub | CB-34-4 | CB-34-5 |
| 7 | Ratchet Assembly | CB-901-4 | CB-7-3 |
| 67 | Brake Disc Front | Included in CB-901-4 | CB-580-6 |
| 67A | Brake Disc Rear | Included in CB-901-4 | CB-580-6 |

To change-over from design series "E" "F" and "G" to the new brake specify kit number CB-910-3K for all capacities.

## 6.3 HOW TO ORDER REPLACEMENT PARTS

When ordering parts or requesting information concerning your CB hoist, always include the hoist model number and serial number with the item and part numbers required. NOTE: Repair parts are available only from Coffing distributors or authorized repair facilities. It is recommended that repair parts orders be directed to the authorized repair facility nearest you.

## 6.4 PARTS LIST

Each part in the hoist is keyed with an item number on the exploded illustrations. Once the item number and part name has been identified the part number can be selected by capacity and design series.

The following is an index for the design series column. No symbol in this column, part is used on all series.

1 Part used on all hoist prior to design series "B"
2 Part used on all design series "B" and later hoist
3 Part used on all design series "B" through design series "D"
4 Part used on all hoist prior to design series "D"
5 Part used on all design series "D" and later hoist
6 Parts used on all design series "E" through design series "G"
7 Parts used on all design series "F" and later hoist
8 Parts used on all design series "H" and later hoist
9 Parts used on all design series "B" through "D" and "H" and later hoist

*Bottom hook assembly changed from a smooth shank hook ¼" diameter pin and collar to a hex slotted nut, 3/16" diameter pin and threaded shank hook. Old style part numbers are as listed. Hook collar JF-108 Driv-Lok Pin H-5122, smooth shank hook CA-3-6

Figure 3
Parts List

| ITEM NO | PART NAME | NO REQ | CAPACITY TONS | DESIGN SERIES | PART NO |
|---|---|---|---|---|---|
| 1 | Top Hook with Latch | 1 | 1<br>1½ & 2<br>3 & 4<br>5 & 6<br>8<br>10 & 12 | | MA-J-10S<br>SHL-5<br>SHL-8<br>SHL-15<br>SHL-16<br>SHL-17 |
| 2 | Top Hook Nut | 1 | 1<br>1½ & 2<br>3 & 4<br>5 & 6<br>8, 10 & 12 | | H-3986-P<br>H-3922-P<br>H-3924-P<br>H-3925-P<br>H-3923-P |
| 3 | Top Hook Pin | 1 | 1<br>1½ & 2<br>3 & 4<br>5 & 6<br>8, 10 & 12 | | H-5251<br>H-5243<br>H-5235<br>H-5256<br>H-5257 |
| 4 | Bottom Hook with Latch | 1 | 1<br>1½ & 2<br>3<br>4<br>5 & 6<br>8<br>10 & 12 | | 3JG20S<br>SHL-26<br>SHL-14<br>SHL-8<br>SHL-15<br>SHL-16<br>SHL-17 |
| 5 | Bottom Hook Nut | 1 | 1<br>1½ & 2<br>3<br>4<br>5 & 6<br>8, 10 & 12 | | H-3986-P<br>H-3991-P<br>H-3922-P<br>H-3924-P<br>H-3925-P<br>H-3923-P |
| 6 | Bottom Hook Pin | 1 | 1<br>1½ & 2<br>3<br>4<br>5 & 6<br>8, 10 & 12 | | H-5159<br>H-5232<br>H-5243<br>H-5235<br>H-5256<br>H-5257 |
| 7 | Ratchet Assembly | 1 | All | 1<br>3<br>6<br>8 | CB-910-2<br>CB-901-3<br>CB-901-4<br>CB-7-3 |
| 8 | Load Sheave | 1 | 1<br>1½ & 2<br>4, 5, 6 & 8<br>3, 10 & 12 | | CB-16-5<br>CB-16-6<br>CB-16-6<br>CB-16-7 |
| 9 | Sheave Nut | 1 | 1<br>1½ & 2<br>4, 5, 6 & 8<br>3, 10 & 12 | | H-3681<br>H-3682<br>H-3682<br>H-3702 |
| 10 | Sheave Lockwasher | 1 | 1<br>1½ & 2<br>4, 5, 6 & 8<br>3, 10 & 12 | | H-4067<br>H-4068<br>H-4068<br>H-4069 |
| 11 | Housing | 1 | 1<br>1<br>1½ & 2<br>1½ & 2<br>4, 5, 6 & 8<br>4, 5, 6 & 8<br>3, 10 & 12<br>3, 10 & 12 | 4<br>5<br>4<br>5<br>4<br>5<br>4<br>5 | CB-18-3<br>CB-18-4<br>CB-18-1<br>CB-18-5<br>CB-18-1<br>CB-18-5<br>CB-18-2<br>CB-18-6 |
| 13 | Load Chain<br>(Price Per Lineal Foot) | — | 1<br>1½ & 2<br>4, 5, 6 & 8<br>3, 10 & 12 | | C-19-9<br>C-19-12<br>C-19-12<br>19J3 |
| 14A | Swivel Frame<br>(For Bolt Head) | 1 | 1<br>1½<br>2<br>3 | | JF-20-2<br>CB-20-4<br>CB-21-3<br>CB-21-1 |
| 14B | Swivel Frame<br>(For Bolt Threads) | 1 | 1<br>1½<br>2<br>3 | | JF-20-3<br>CB-20-5<br>CB-21-2<br>CB-21 |
| 15 | Swivel Frame Screw | 2 | 1½, 2 & 3 | | H-2313-P |
| 16 | Swivel Frame Nut | 2 | 1½, 2 & 3 | | H-3943-P |
| 17 | Pawl (Inc. CB-180 Pin) | 1 | All | 2 | CB-902-3 |
| 18 | Pawl Stud<br>(Inc. Item 82) | 1 | All | | CB-26-3RP |
| 19 | Pawl Lockwasher | 1 | All | | H-4065 |

| ITEM NO | PART NAME | NO REQ. | CAPACITY TONS | DESIGN SERIES | PART NO |
|---|---|---|---|---|---|
| 21 | Sheave (Load Block & Outrigger) | 1<br>2<br>3<br>3 | 4<br>5 & 6<br>8<br>10 & 12 | | CB-28<br>CB-28<br>CB-28<br>CB-28-1 |
| 22 | Load Block Frame | 2 | 4<br>5 & 6<br>8<br>10 & 12 | | CB-30<br>CB-30-4<br>CB-30-2<br>CB-30-3 |
| 23 | Load Block Screw | 2<br>2<br>4 | 4<br>5 & 6<br>8, 10 & 12 | | H-2411-P<br>H-2419-P<br>H-2419-P |
| 24 | Load Block Nut | 2<br>2<br>4 | 4<br>5 & 6<br>8, 10 & 12 | | H-3965-P<br>H-3966-P<br>H-3966-P |
| 25 | Side Cover | 2 | 1<br>1<br>1½ & 2<br>1½ & 2<br>4, 5, 6 & 8<br>4, 5, 6 & 8<br>3, 10 & 12<br>3, 10 & 12 | 4<br>5<br>4<br>5<br>4<br>5<br>4<br>5 | CB-31<br>CB-31-3<br>CB-31-1<br>CB-31-4<br>CB-31-1<br>CB-31-4<br>CB-31-2<br>CB-31-5 |
| 26 | Side Cover Screw | 8 | All | | H-1106-P |
| 27 | Side Cover Lockwasher | 8 | All | | H-4062-P |
| 28 | Hand Chain Wheel Cov. | 1 | 1<br>1<br>1½, 2, 3, 4, 5,<br>1½, 2, 3, 4, 5,<br>6, 8, 10 & 12<br>6, 8, 10 & 12 | 4<br>5<br>4<br>5<br>4<br>5 | CB-32-2<br>CB-32-4<br>CB-32-1<br>CB-32-5<br>CB-32-1<br>CB-32-5 |
| 29 | H.C. Wh. Cover Screw | 3 | 1<br>1<br>1½, 2, 3, 4, 5<br>6, 8, 10 & 12 | 4<br>5 | H-1843-P<br>H-1847<br>H-1107-P<br>H-1107-P |
| 30 | H.C. Wh. Cover Lockwasher | 3 | 1<br>1½, 2, 3, 4, 5<br>6, 8, 10 & 12 | | H-4062-P<br>H-4066-P<br>H-4066-P |
| 31 | H.C. Wh. Cover Pin | 2 | All | | H-5382 |
| 32 | Hand Chain Wheel | 1 | 1<br>1<br>1½, 2, 3, 4, 5<br>1½, 2, 3, 4, 5<br>6, 8, 10 & 12<br>6, 8, 10 & 12 | 1<br>2<br>1<br>2<br>1<br>2 | CB-33-2<br>CB-33-7<br>CB-33-1<br>CB-33-6<br>CB-33-1<br>CB-33-6 |
| 33 | Hub | 1 | All | 1<br>3<br>6<br>8 | CB-34<br>CB-34-3<br>CB-34-4<br>CB-34-5 |
| 34 | Hub Retaining Ring | 1 | All | | H-5502 |
| 35 | Chain Guide | 1 | 1<br>1½, 2, 4, 5<br>6 & 8<br>3, 10 & 12 | | CB-36<br>CB-36-1<br>CB-36-1<br>CB-36-3 |
| 36 | Roll Pins | 2 | 1<br>1½ & 2<br>4, 5, 6 & 8<br>3, 10 & 12 | | H-5242<br>H-5254<br>H-5254<br>H-5255 |
| 37 | Shedder | 1 | 1<br>1½ & 2<br>4, 5, 6 & 8<br>3, 10 & 12 | | CB-37-3<br>CB-37-4<br>CB-37-4<br>CB-37-5 |
| 38 | Dead End Pin | 1 | 1<br>1½ & 2<br>4, 5, 6 & 8<br>3, 10 & 12 | | H-5132-P<br>H-5133-P<br>H-5133-P<br>H-5134-P |
| 39 | Roll Pin | 2 | 1<br>1½ & 2<br>4, 5, 6 & 8<br>3, 10 & 12 | | H-5242<br>H-5247<br>H-5247<br>H-5248 |
| 40 | Outrigger | 1 | 4<br>5 & 6<br>8<br>10 & 12 | | CB-42<br>CB-42-4<br>CB-42-2<br>CB-42-3 |
| 41 | Outrigger Ret. Ring | 1 | 5, 6 & 8<br>10 & 12 | | H-5514<br>H-5515 |

| ITEM NO | PART NAME | NO REQ | CAPACITY TONS | DESIGN SERIES | PART NO |
|---|---|---|---|---|---|
| 42 | Hand Chain (Price Per Lineal Foot) | — | All | | 53-A |
| 43 | Pawl Spring | 1 | All | | B-67 |
| 44 | Pawl Spring Roll Pin | 1 | All | | H-5235 |
| 45 | Load Block Shaft | 1<br>2<br>2 | 4, 5 & 6<br>8<br>10 & 12 | | CB-100<br>CB-100<br>CB-100-1 |
| 46 | Outrigger Shaft | 1 | 5, 6 & 8<br>10 & 12 | | CB-100-2<br>CB-100-3 |
| 47 | Shaft Pin (Load Block & Outrigger) | 1<br>2<br>3<br>3 | 4<br>5 & 6<br>8<br>10 & 12 | | H-5235<br>H-5235<br>H-5235<br>H-5256 |
| 48 | Keeper | 1 | 4, 5, 6 & 8<br>10 & 12 | | CB-102<br>CB-102-1 |
| 49 | Adapter Bearing | 1 | 10 & 12 | | CB-103-2 |
| 51 | Bearing Retainer | 1 | 1<br>1½ & 2<br>4, 5, 6 & 8<br>3, 10 & 12 | | CB-250<br>CB-250-1<br>CB-250-1<br>CB-250-2 |
| 52 | Bearing Retainer Screw | 4<br>6<br>6<br>8 | 1<br>1½ & 2<br>4, 5, 6 & 8<br>3, 10 & 12 | | H-2952<br>H-2952<br>H-2952<br>H-2952 |
| 53 | Thread Stop | 1 | All | | CB-251 |
| 54 | Thread Stop Pin | 1 | 1<br>1½, 2 & 3<br>4, 5, & 6<br>8, 10 & 12 | | H-5239<br>H-5263<br>H-5263<br>H-5263 |
| 55 | Top Hook Washer | 1 | 1<br>1½ & 2<br>3 & 4<br>5 & 6<br>8, 10 & 12 | | JF-260<br>CB-252<br>CB-252-1<br>CB-252-3<br>CB-252-4 |
| 56 | Bottom Hook Washer | 1 | 3<br>4<br>5 & 6<br>8 | | CB-253<br>CB-252-2<br>CB-252-3<br>CB-252-4 |
| 57 | Gear Shim | AR | 1<br>1½, 2, 4 & 5<br>6 & 8<br>3, 10 & 12 | | CB-254<br>CB-254-1<br>CB-254-1<br>CB-254-2 |
| 58 | Washer | 2<br>4<br>6<br>6 | 4<br>5 & 6<br>8<br>10 & 12 | | CB-255<br>CB-255<br>CB-255<br>CB-256 |
| 59 | Gear | 1 | 1<br>1½ & 2<br>4, 5, 6 & 8<br>3, 10 & 12 | | CB-480-3<br>CB-482-3<br>CB-482-3<br>CB-484-3 |
| 60 | Pinion Shaft | 1 | 1<br>1½ & 2<br>4, 5, 6 & 8<br>3, 10 & 12 | | CB-481-1<br>CB-483-2<br>CB-483-2<br>CB-485-2 |
| 61 | Bearing | 3 | 1<br>1½, 2 & 4<br>5, 6 & 8<br>3, 10 & 12 | | CB-504<br>CB-504-1<br>CB-504-1<br>CB-504-2 |
| 62 | Bearing | 1 | All | | CB-505 |
| 63 | Thrust Bearing | 1 | 1<br>1½ & 2<br>3<br>4<br>5 & 6<br>8<br>10 & 12 | | JF-510<br>JF-511<br>CB-510<br>CB-511<br>CB-511-1<br>CB-511-2<br>CB-511-3 |
| 64 | Sheave Roller Bearing | 2<br>4<br>6<br>6 | 4<br>5 & 6<br>8<br>10 & 12 | | CB-521<br>CB-521<br>CB-521<br>CB-521-1 |
| 67 | Brake Disc (Front) | 1 | All | 1<br>9 | CB-580-2<br>CB-580-6 |
| 67A | Brake Disc (Rear) | 1 | All | 1<br>9 | CB-580-2<br>CB-580-6 |

| ITEM NO | PART NAME | NO REQ | CAPACITY TONS | DESIGN SERIES | PART NO |
|---|---|---|---|---|---|
| 68 | Capacity Plate (Hoist) | 1 | 1<br>1½<br>1½<br>2<br>2<br>3<br>3<br>4<br>4<br>5<br>5<br>6<br>6<br>8<br>8<br>10<br>10<br>12<br>12 | 5<br>4<br>5<br>4<br>5<br>4<br>5<br>4<br>5<br>4<br>5<br>4<br>5<br>4<br>5<br>4<br>5<br>4<br>5 | CB-684<br>MA-675<br>CB-683-1<br>CB-675<br>CB-683-2<br>CB-675-3<br>CB-683-3<br>CB-675-1<br>CB-683-4<br>CB-675-6<br>CB-683-5<br>CB-675-4<br>CB-683-6<br>CB-675-2<br>CB-683-7<br>CB-675-7<br>CB-683-8<br>CB-675-5<br>CB-683-9 |
| 69 | Capacity Plate (Load Block) | 2 | 5<br>6<br>10<br>12 | | CB-675-8<br>CB-675-9<br>CB-675-7<br>CB-675-5 |
| 70 | Drive Screw (Cap. Plate) | 4<br>8 | 1½, 2, 3, 4, 8<br>5, 6, 10 & 12 | | H-2861-P<br>H-2861-P |
| 71 | Swivel Screw | 1 | 1<br>1½<br>2<br>3 | | JF-700<br>CB-700-1<br>CB-700-1<br>CB-700 |
| 72 | Lockwasher (Swivel Screw) | 1 | 1½<br>2<br>3 | | H-4135<br>H-4135<br>H-4137 |
| 73 | Dead End Screw | 1 | 4 & 8<br>5 & 6<br>10 & 12 | | CB-700-1<br>CB-700-2<br>CB-700 |
| 74 | Lockwasher (Dead End) | 1 | 4 & 8<br>10 & 12 | | H-4135<br>H-4137 |
| 75 | Nut (Dead End) | 1 | 5 & 6 | | H-3965-P |
| 76 | Outrigger Screw | 2 | 4 thru 12 | | CB-701 |
| 77 | Lockwasher (Outrigger Screw) | 2 | 4 thru 12 | | H-4063-P |
| 78 | Torsion Spring (Pawl) | 1 | All | | CB-312-1 |
| 80 | Flat Washer | | All | | H-4216 |
| 81 | Top & Botton Latch Kit | 2 | 1<br>1½ & 2<br>3, 4, 5 & 6<br>8<br>10 & 12 | | H-7540<br>H-7544<br>H-7545<br>H-7546<br>H-7547 |
| 82 | Retaining Ring | 1 | All | 7 | H-5568 |
| 83 | Warning Label | 1<br>1<br>2 | 1<br>1½, 2 & 3<br>4 thru 12 | | 687-K-1<br>687-K-2<br>687-K-4 |

IN ADDITION TO THE PARTS LISTED ABOVE THE FOLLOWING ASSEMBLIES MAY BE PROCURED.

| PART NAME | CAPACITY TONS | PART NO |
|---|---|---|
| Load Block-Shaft (Items 45 & 47) | 4, 5, 6 & 8<br>10 & 12 | CB-903<br>CB-903-1 |
| Outrigger Shaft (Items 46 & 47) | 5, 6, & 8<br>10 & 12 | CB-903-2<br>CB-903-3 |
| Sheave & Bearing (Items 21 & 64) | 4, 5, 6 & 8<br>10 & 12 | CB-916<br>CB-916-1 |
| Bottom Hook & Bearing (Items 4, 5, 6, 49, 50, 56, 63 & 81) | 1<br>1½<br>2<br>3<br>4<br>5 & 6<br>8<br>10 & 12 | 3JG20S<br>CB-912-11<br>CB-912-11<br>CB-912-12<br>MA-912-3<br>CB-912-14<br>CB-912-15<br>CB-912-16 |
| Load Block (Items 22, 23, 24, 58, Load Block Shaft Assby., Bottom Hook Assby. & Sheave & Bearing Assby.) | 1<br>4<br>5 & 6<br>8<br>10 & 12 | 913JG4AS<br>CB-914-5<br>CB-914-6<br>CB-914-7<br>CB-914-8 |
| Outrigger (Items 1, 2, 3, 40, 41, 55, 58, Outrigger Shaft Assby & Sheave & Bearing Assby.) | 4<br>5 & 6<br>8<br>10 & 12 | CB-900<br>CB-900-4<br>CB-900-2<br>CB-900-3 |

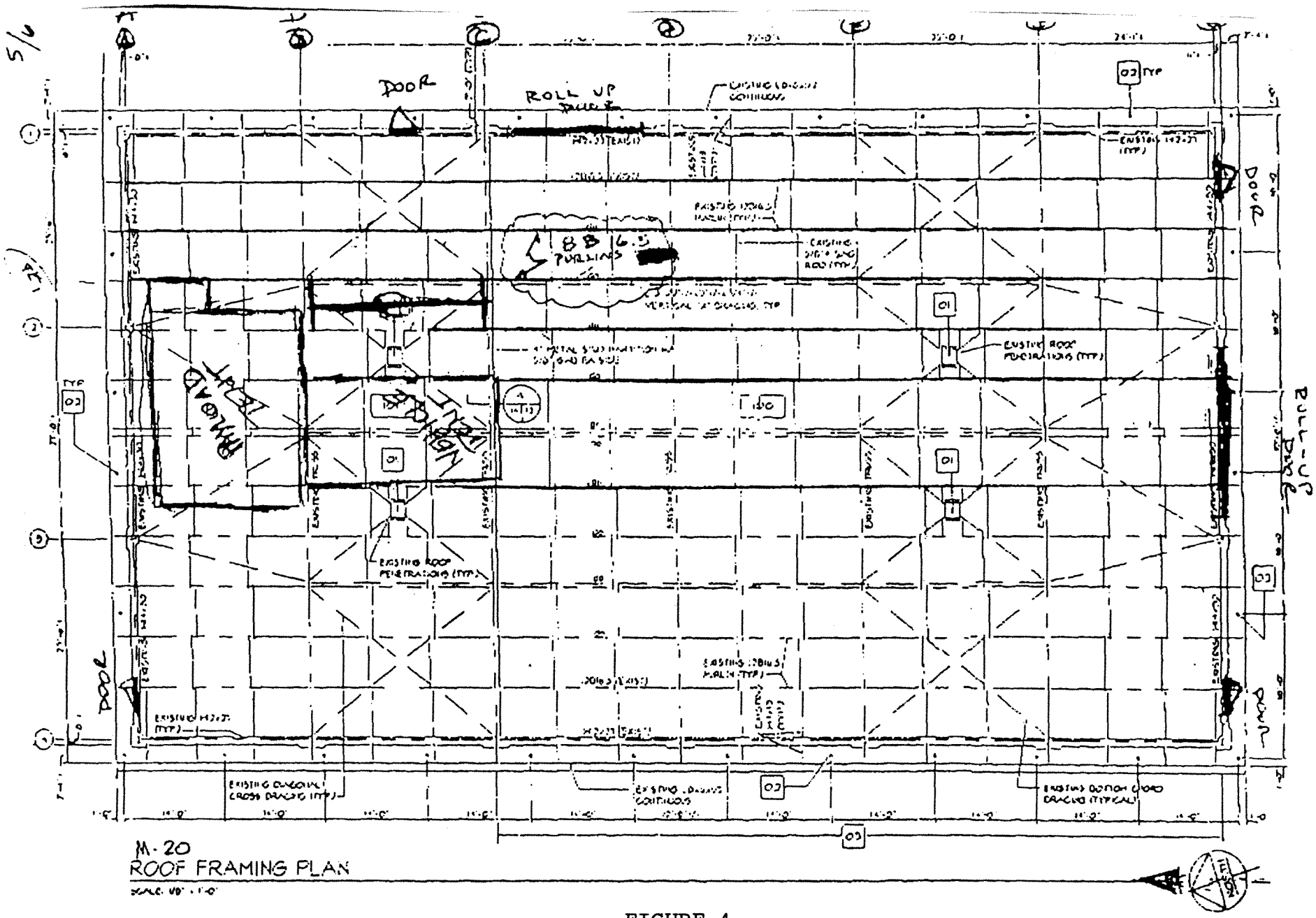


FIGURE 4
BUILDING M-20 ROOF FRAMING PLAN (WFF DWG. 2868)

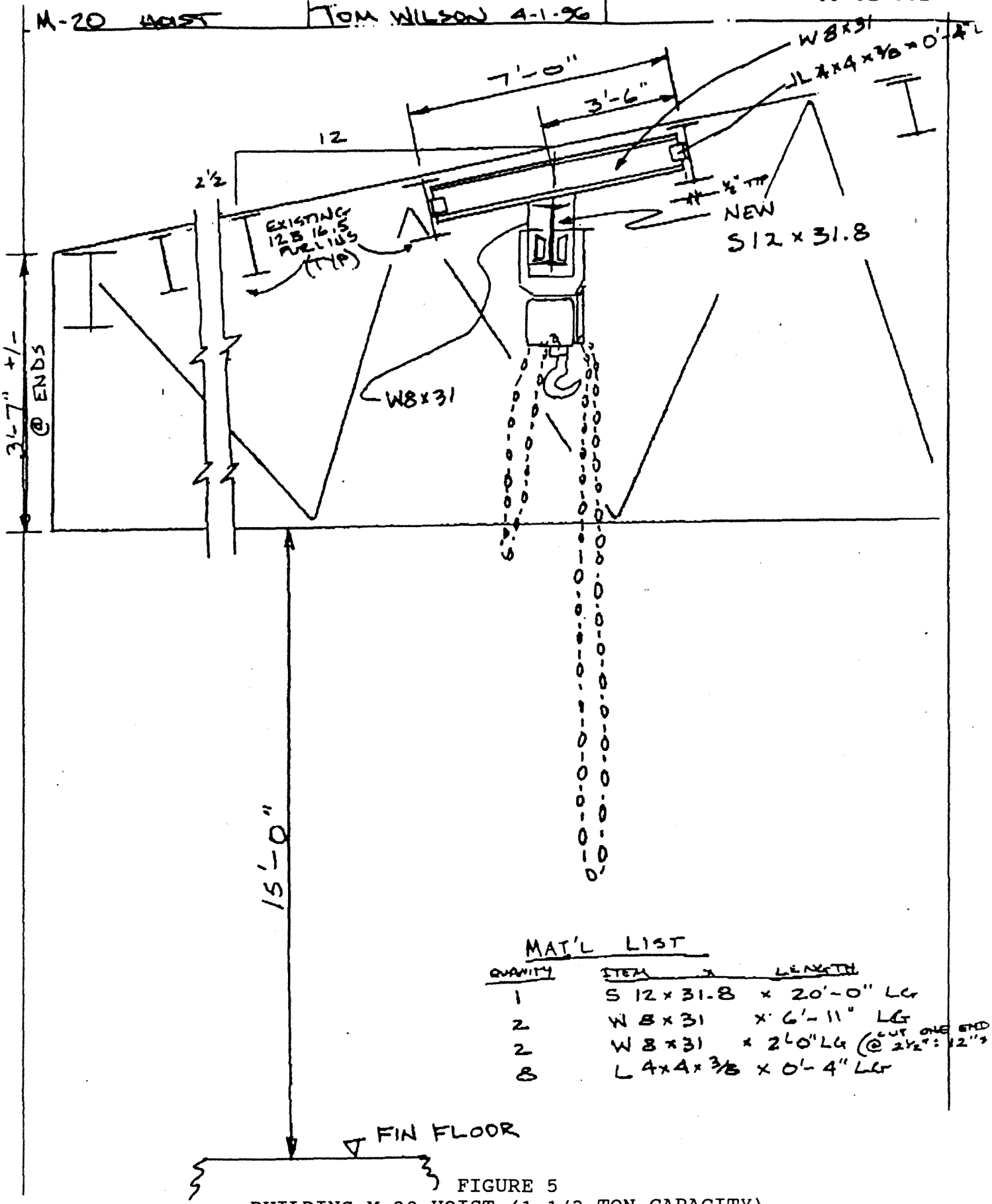


MAT'L LIST

| QUANTITY | ITEM | LENGTH |
|---|---|---|
| 1 | S 12 x 31.8 | x 20'-0" LG |
| 2 | W 8 x 31 | x 6'-11" LG |
| 2 | W 8 x 31 | x 2'-0" LG (@ CUT ONE END 2½": 12"'s |
| 8 | L 4x4x3/8 | x 0'-4" LG |

FIGURE 5
BUILDING M-20 HOIST (1-1/2 TON CAPACITY)

MANTECH NSI

# Memorandum

NSI Technology Services Corporation
Aerospace Technology Applications Center, A ManTech International Company

To: W. Hargrove
VIA S. Chan/750 3/10/97

From: M. Crompton

Subject: Revision of Failure Modes and Effects Analysis (FMEA) for M-20 Lifting System, Monorail Structure

Date: March 10, 1997

Copies: M. Fillis/832
A. Lekebush/302
E. Ransone/823
J. Reddish/832
L. Bennett/NSI
Files 4003, 22.0(PEGASUS)

In reply refer to: NSI-4003-22.0-015

cc: w/o enclosures
M. Barthelmy/313
A. Simpson/750
J. Stecher/750
J. Packard/NSI
M. Scofield/NSI

Reference: Failure Modes and Effects Analysis (FMEA) and Operating and Support Hazard Analysis (O&SHA) for the One and One-Half Ton Hand Chain Hoist (M-20-3), Building M-20, Wallops Flight Facility, NSI-4003-22.0-013

This memorandum provides closure to the open issue of "Hazardous Condition H3" as identified in the referenced analysis. Rationale and details follow.

This particular concern pertains to the Building M-20 monorail crane structural details, i.e., the W8x31 beam connection to the existing building purlins. The concern is irrespective of the lifting operation category, critical or noncritical.

Various memos documenting the structure design/review process are included in the attached "List of References." See References 1, 4, 5, 7, and 8. The design of the Building M-20 monorail support structure, performed by Code 228.2, was in accordance with the procedure described in the April 1992 issue of "Steel Interchange - Modern Steel Construction." It is recognized that the design of this structure is within the scope and expertise of a competent structural engineer for the application of these principles to this particular structure.

Please attach this memo to the subject O&SHA and close the Item H3. Complete the "Verification Actions" column with reference of this memo and following document:

- FMB Roof Structural Analysis Title: Installation of Monorail System (1-1/2-Ton) in Building M-20, prepared 11/21/96, revised 1/2/97 (attached).

Mel Crompton

Mel Crompton
Project Engineer
Recertification Support

Attachments - 2

## List of References


1. NASA Wallops Island Facsimile Transmission, Wallops Island Facility Building M20 Roof Truss and Monorail Structure Calculations, Tom Wilson to Mel Crompton, September 12, 1996.

2. Test and Inspection Procedure for Manually Operated Chain Hoist, Manual Trolley, Hoist No. M-20-3, NSI Procedure 44-06-461 dated September 1996.

3. Memo from T. Ransone to S. Chan, Subject: Safety Requirements for the Critical Lift Chain Hoist in M-20, dated September 16, 1996.

4. Memo to T. Wilson via S. Chan from L. Bennett, Subject: Wallops Island Facility Building M-20 Review of Roof Truss and Monorail Structure Calculations, LHB 093096, dated September 30, 1996.

5. Memo from T. Wilson/NASA WFF/Code 228.2 to L. Bennett/NSI/GSFC, Subject: WFF Building M-20, Monorail Structure Calculations, dated November 22, 1996. Reference memo dated September 30, 1996 (LHB 093096).

6. M. Crompton to M. Fillis via S. Chan/750, Subject: Failure Modes and Effects Analysis (FMEA) & Operating and Support Hazard Analysis (O&SHA) for the One and One-Half Ton Hand Chain Hoist (M-20-3), Building M-20, Wallops Flight Facility, NSI Document NSI-4003-22.0-013, dated October 1, 1996.

7. Memo from L. Bennett/GSFC/750.5 via S. Chan to E. Ransone/823, Subject: Building M-20 Crane, LHB 121296, dated December 12, 1996. Reference: Memo T. Wilson to L. Bennett, WFF Building M20 Monorail Structure Calculations, 11/22/96.

8. Memo from T. Wilson/NASA WFF/Code 228.2 to S. Chan/750, Subject: WFF Building M-20 Monorail Structure Concerns, dated January 7, 1997. Reference letter dated September 13, 1996 (LHB 121296).


Attachment

# INSTALL OF MONORAIL SYSTEM (1½ TON) IN BLDG. M-20 - CRITICAL LIFT

Prepared by: Tom Wil
11-21-96

Revised by Tom Wilson
1-2-96

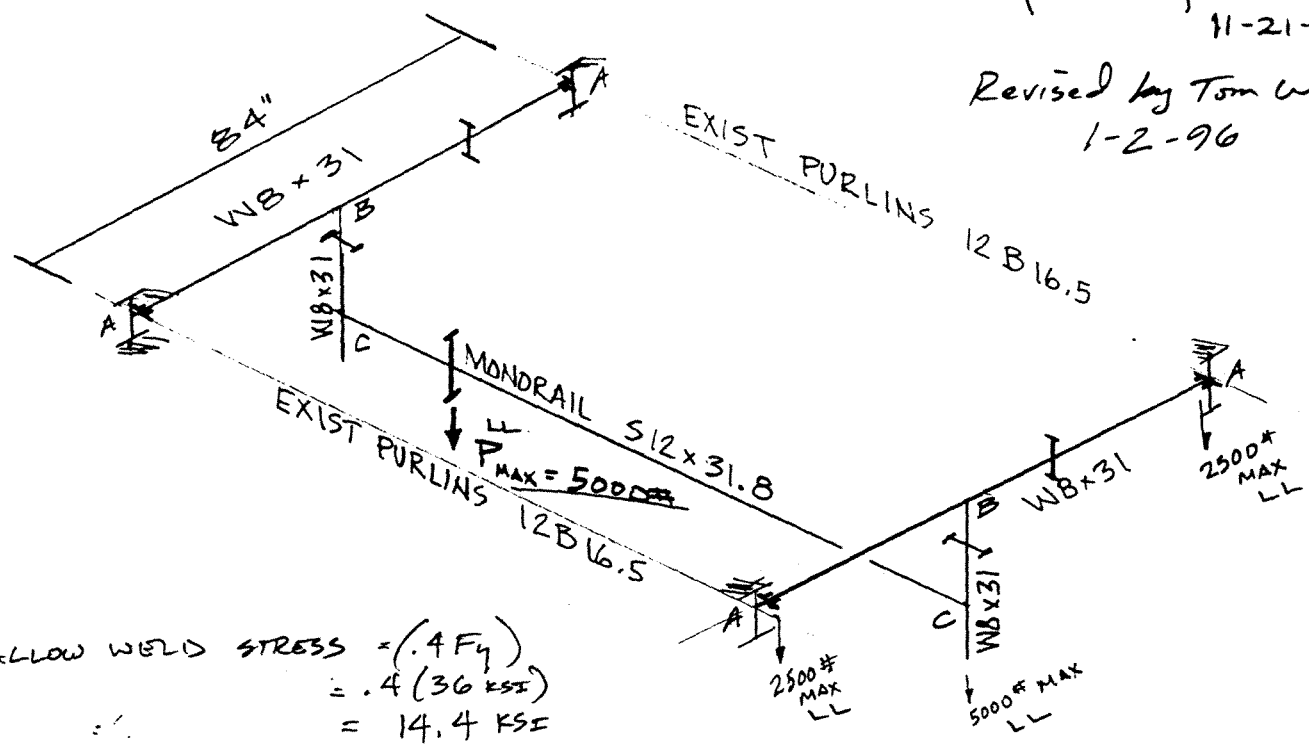


ALLOW WELD STRESS = (.4 $F_y$)
= .4 (36 KSI)
= 14.4 KSI

## CHECK W8 x 31 BEAM (HORZ)

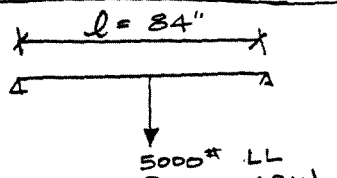


$M_{MAX} = \frac{Pl}{4} = \frac{5.2(84)}{4} = 109$ IN-KIP

$S_{MIN} = \frac{109 \text{ IN-KIP}}{21.6 \text{ KSI}} = 5.06 \text{ IN}^3$

S = —

$S_{W8x31} = 36.4 \text{ IN}^3 \gg 5.06 \text{ IN}^3$

∴ OK

$FS_{(YIELD)} = \frac{36.4}{5.06} = 7.2$

## CHECK W8 x 31 COLUMN (VERT)

$f_a = P/A = \frac{5,200 \#}{9.13 \text{ IN}^2} = 570 \text{ PSI} \gg F_a = 70,000 \text{ PSI}$

$\frac{Kl}{r} = \frac{2.1(24)}{2.2} = 23$ ; $F_a = 70$ KSI

$FS_{YIELD} = \frac{70,000 \text{ PSI}}{570 \text{ PSI}} = 122$

## CHECK WELD @ COLUMN TO BEAM W8 x 31's (IN TENSION ONLY)

NODE B

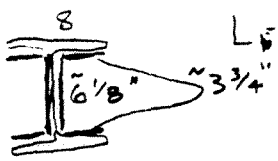


$L = 2[6\frac{1}{8} + 3\frac{3}{4}(2)] = 27.25"$ of Weld

$\frac{P_a}{L_a} = \frac{5.2 \text{ KIP}}{27.25 \text{ IN}} = 0.191$ K/IN

REQD SIZE = $\frac{0.191 \text{ K/IN}}{.707 \times 14.4 \text{ KSI}} = 0.0188" < 3/16"$ ∴ OK

COLUMN = .1875 = NA

TFWilson 11-21-96

SUPPLEMENT TO ANALYSIS FOR 1½ TON MONORAIL HOIST IN BLDG M-20 AT WFF.

CHECK WELDS OF BEAM CLIPS L4x4x3/8 TO EXIST PURLINS

NODE A

$P_{MAX} = 5000^{\#}/2$

M @ ENDS OF BEAM = 0

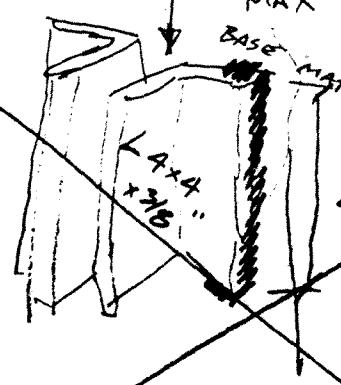


4" EACH SIDE

t CLIPS = 3/8"
t BASE 12B16.5 = 1/4"
MIN WELD = 3/16"

LOAD IS SHEAR ONLY

$f_R = \frac{2500^{\#}}{8\ IN} = 312.5\ \#/IN$

$W_{REQ} = \frac{312.5\ \#/IN}{.4(36{,}000\ PSI)} = 0.022'' < 0.188'' = 3/16''$ (.707)

MIN WELD FOR MAT'L 3/8" THICK

~~FS(YIELD) = (.707).875 / .022 = 6.03 ∴ OK~~

SEE SHEET 7A

CHECK WELDS OF BEAM CLIPS TO NEW BEAM

NODE A

$P_{MAX} = 5000^{\#}$

M @ ENDS OF BEAM = 0

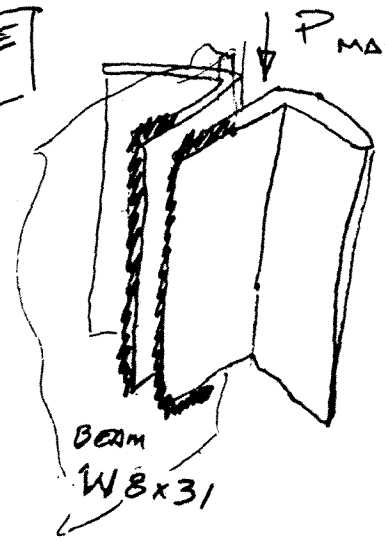


t CLIPS = 3/8"
t BEAM = 3/8"
MIN WELD = 3/16"

WELDS ARE ACCEPTABLE BY COMPARISON TO CALCS ABOVE.

($W_{REQ'D} = 0.022'' < W_{ACTUAL} = 0.188''$ (x.707))

∴ OK

$FS(YIELD) = \frac{0.1326}{0.022} = 6.03$

T Wilson
11-21-96

NODE C

CHECK WELD @ COLUMN W8x31 TO RUNWAY BEAM S12x31.8 (SHEAR ONLY)

$L_c = 9\frac{5}{8}(2) + 5(2) = 29\frac{1}{4}''$

$\frac{F_y}{L_c} = \frac{5.2 \text{ KIP}}{29\frac{1}{4} \text{ IN}} = 0.176 \text{ K/IN}$

REQ'D WELD SIZE $= \frac{0.176 \text{ K/IN}}{14.4 \text{ KSI}} = 0.0122'' < \frac{3}{16}''(.707)$ ACTUAL WELD SIZE

$FS \text{ (YIELD)} = \frac{0.1326}{0.0122} = 11 \quad \therefore$ OK

CHECK LOWER FLANGE LOADING

REF ACCO BEAM DESIGN GUIDE ← Attached

$L = 17'4'' = 208''$
ASSUME $A = 5$

$MWL = \frac{KP}{2} + \frac{H}{2}$ ASSUME $K = 1.15$ (CONSV. CHAIN HOIST)

$MWL = \frac{1.15(3750)}{2} + \frac{(250)}{2} = 2281$ #

$A/L = 5/208 = 0.025$ FROM TABLE $K_1 = 2$, $K_2 = 2$ $> = K = 2$

E.C.L $K(MWL) = 2(2,281) = 4,562$ #

FOR S12x31.8 M.C.L $= 5,810 >$ E.C.L $= 4,562$ #

FOR A SPAN OF 18' LFL $= 7229 >$ MWL

$\therefore$ OK PER ACCO

NEXT: CHECK ACCORDING TO CMAA 73-4
(LOCAL BENDING OF FLANGES)

SEE NEXT PAGE

T Wilson
11-21-96

PER CMAA 74-3

REFERENCE CMAA 74-3

LOCAL BENDING OF FLANGES DUE TO WHEEL LOAD

S 12 × 31.8 $\quad t_f = 0.544$, $b = 5$, $t_w = 0.35$

$a = 0.5$

$$\lambda = \frac{2a}{b - t_w} = \frac{2(.5)}{5.00 - 0.35} = 0.215''$$

$e = 2.71828$

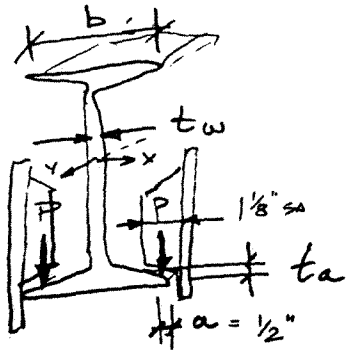


$$t_a = t_f - \left[\frac{b}{24}\right] + \left[\frac{a}{6}\right]$$

$$= .544 - \left[\frac{5}{24}\right] + \left[\frac{.5}{6}\right]$$

$$t_a = 0.419''$$

CONSERVATIVE NO IMPACT READ FOR HAND CHAIN HOIST

$$P = \frac{3750 + 250\,(1.15)}{4 \text{ WHEELS}} = 1{,}150^{\#} \text{ OR } 1.15 \text{ KIP}$$

$$C_{xo} = -1.096 + 1.095\lambda + 0.192\,e^{-6.0\lambda}$$
$$= -1.096 + 1.095(.215) + 0.192(2.71828)^{-1.29} = \cancel{1.637}\ -0.624$$

$$C_{x1} = 3.965 - 4.835\lambda - 3.965\,e^{\cancel{-2.675\lambda}\ -.375}$$
$$= 3.965 - 1.040 - .255 = 2.700$$

$$C_{yo} = -0.981 - 1.479\lambda + 1.120\,e^{1.322\lambda}$$
$$-1.299 + 3.044^{.284} = 0.073$$

$$C_{y1} = 1.810 - 1.150\lambda + 1.060\,e^{-7.70\lambda}$$
$$1.563 + 2.881^{-1.656} = 1.736$$

$$\sigma_{xo} = C_{xo}\frac{P}{t_a^2} = \cancel{1.637}\ -0.624\ \frac{1.15^{6.55}}{(0.419)^2} = \cancel{10.723}\ -4.086 \text{ KSI}$$

$$\sigma_{yo} \quad C_{yo}\frac{P}{t_a^2} = 0.478 \text{ KSI}$$

$$\sigma_{x1} \quad C_{x1}\,P/t_a^2 = 17.685 \text{ KSI}$$

$$\sigma_{y1} \quad C_{y1}\,P/t_a^2 = 11.371 \text{ KSI}$$

POINT 1 CONTROLS

CHECK COMBINED STRESSES

ALLOW STRESS $\sigma_A = .66\,\sigma_{YP} = 23.76$ KSI

$$\sigma_t = \sqrt{17.685^2 + 11.371^2} = 21.0125 \text{ KSI} < 23.76 \text{ KSI} \therefore \text{OK}$$

T Wilson 5A
11-21-96

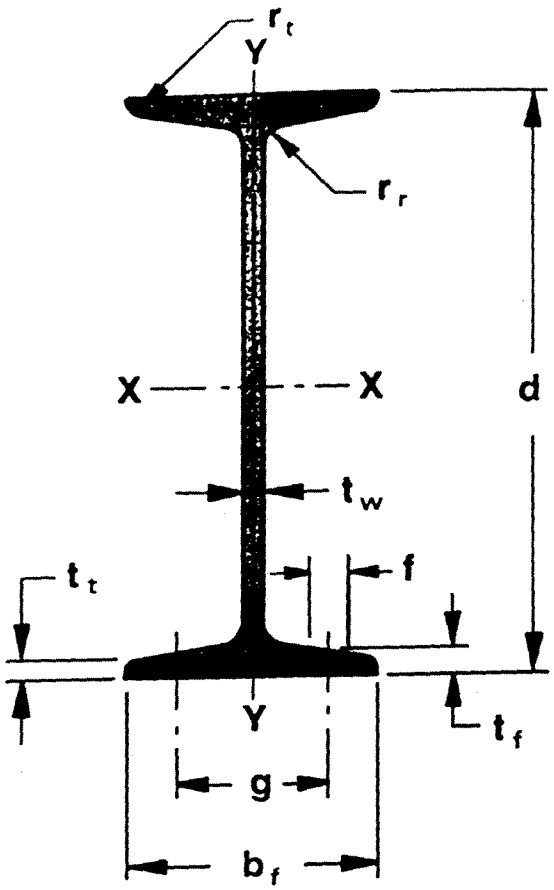


# Structural Beam Design Guide and Selection Chart for Overhead Crane Runway System

ACCO

Hoist & Crane Division

T Wilson 11-21-96 6A

# AMERICAN STANDARD SHAPES (S SHAPES)

**Lower flange loadings tabulated below are based on static load and do not consider service. Spacing between wheel centers must be equal to or greater than total flange width. All loading figures shown are in pounds.**

| S Shape | Lower* Flange Loading | Span in feet | | | | | | | | | | | | | | | | | | | | |
|---|---|---|---|---|---|---|---|---|---|---|---|---|---|---|---|---|---|---|---|---|---|---|
| | | 10 | 12 | 14 | 16 | 18 | 20 | 22 | 24 | 26 | 28 | 30 | 32 | 34 | 36 | 38 | 40 | 42 | 44 | 46 | 48 | 50 |
| 6x12.5 | 2,540 | 2687 D | 1826 D | 1301 D | - | - | - | - | - | - | - | - | - | - | - | - | - | - | - | - | - | - |
| 6x17.25 | 2,540 | 3183 D | 2156 D | 1528 D | - | - | - | - | - | - | - | - | - | - | - | - | - | - | - | - | - | - |
| 7x15.3 | 3,040 | 4496 D | 3074 D | 2209 D | 1641 D | - | - | - | - | - | - | - | - | - | - | - | - | - | - | - | - | - |
| 8x18.4 | 3,600 | 7092 D | 4867 D | 3516 D | 2631 D | 2017 D | - | - | - | - | - | - | - | - | - | - | - | - | - | - | - | - |
| 8x23 | 3,600 | 7977 D | 5467 D | 3942 D | 2942 D | 2248 D | - | - | - | - | - | - | - | - | - | - | - | - | - | - | - | - |
| 10x25.4 | 4,830 | 14362 T | 10584 D | 7694 D | 5807 D | 4503 D | 3561 D | 2856 D | - | - | - | - | - | - | - | - | - | - | - | - | - | - |
| 10x35 | 4,830 | 17071 T | 12510 D | 9078 D | 6835 D | 5283 D | 4161 D | 3319 D | - | - | - | - | - | - | - | - | - | - | - | - | - | - |
| 12x31.8 | 5,810 | 21193 T | 16266 L | 11951 L | 9150 L | 7229 L | 5856 L | 4840 L | 4067 L | 3465 L | - | - | - | - | - | - | - | - | - | - | - | - |
| 12x35 | 5,810 | 22233 T | 17153 L | 12602 L | 9648 L | 7623 L | 6175 L | 5103 L | 4288 L | 3654 L | - | - | - | - | - | - | - | - | - | - | - | - |
| 12x40.8 | 7,870 | 26428 T | 21948 T | 17007 D | 12886 D | 10045 D | 7998 D | 6471 D | 5296 D | 4371 D | - | - | - | - | - | - | - | - | - | - | - | - |
| 12x50 | 7,870 | 29549 T | 24533 T | 19033 D | 14407 D | 11216 D | 8915 D | 7197 D | 5875 D | 4833 D | - | - | - | - | - | - | - | - | - | - | - | - |
| 15x42.9 | 7,420 | 34747 T | 25025 L | 18386 L | 14077 L | 11122 L | 9009 L | 7445 L | 6256 L | 5331 L | 4596 L | 4004 L | 3519 L | - | - | - | - | - | - | - | - | - |
| 15x50 | 7,420 | 37762 T | 27284 L | 20046 L | 15347 L | 12126 L | 9822 L | 8118 L | 6821 L | 5812 L | 5011 L | 4365 L | 3837 L | - | - | - | - | - | - | - | - | - |
| 18x54.7 | 9,060 | 52052 L | 36147 L | 26557 L | 20333 L | 16065 L | 13013 L | 10755 L | 9037 L | 7700 L | 6639 L | 5784 L | 5083 L | 4503 L | 4016 L | 3605 L | - | - | - | - | - | - |
| 18x70 | 9,060 | 60070 T | 41882 L | 30771 L | 23559 L | 18614 L | 15078 L | 12461 L | 10471 L | 8922 L | 7693 L | 6701 L | 5890 L | 5217 L | 4654 L | 4177 L | - | - | - | - | - | - |
| 20x66 | 11,290 | 69319 L | 48138 L | 35367 L | 27078 L | 21395 L | 17330 L | 14322 L | 12035 L | 10254 L | 8842 L | 7702 L | 6769 L | 5996 L | 5348 L | 4800 L | 4332 L | 3929 L | - | - | - | - |
| 20x75 | 11,290 | 74574 L | 51788 L | 38048 L | 29131 L | 23017 L | 18644 L | 15408 L | 12947 L | 11031 L | 9512 L | 8286 L | 7282 L | 6451 L | 5754 L | 5164 L | 4661 L | 4227 L | - | - | - | - |
| 20x86 | 14,920 | 90493 T | 75253 T | 59754 L | 45749 L | 36147 L | 29279 L | 24198 L | 20333 L | 17325 L | 14938 L | 13013 L | 11437 L | 10131 L | 9036 L | 8110 L | 7319 L | 6639 L | - | - | - | - |
| 20x96 | 14,920 | 96309 T | 80081 T | 64095 L | 49072 L | 38773 L | 31406 L | 25956 L | 21810 L | 18583 L | 16023 L | 13958 L | 12268 L | 10867 L | 9693 L | 8699 L | 7851 L | 7121 L | - | - | - | - |
| 24x80 | 13,900 | - | 73337 L | 53880 L | 41252 L | 32594 L | 26401 L | 21819 L | 18334 L | 15622 L | 13470 L | 11733 L | 10313 L | 9135 L | 8148 L | 7313 L | 6600 L | 5986 L | 5454 L | 4990 L | 4504 C | 3920 C |
| 24x90 | 13,900 | - | 78029 L | 57328 L | 43892 L | 34680 L | 28091 L | 23215 L | 19507 L | 16622 L | 14332 L | 12485 L | 10973 L | 9720 L | 8670 L | 7781 L | 7023 L | 6370 L | 5804 L | 5310 L | 4828 C | 4190 C |
| 24x100 | 13,900 | - | 82895 L | 60903 L | 46629 L | 36842 L | 29842 L | 24663 L | 20724 L | 17658 L | 15225 L | 13263 L | 11657 L | 10326 L | 9210 L | 8266 L | 7460 L | 6767 L | 6166 L | 5641 L | 5161 C | 4468 C |
| 24x106 | 21,020 | - | - | 98440 L | 75368 L | 59550 L | 48236 L | 39864 L | 33479 L | 28542 L | 24610 L | 21438 L | 18842 L | 16690 L | 14887 L | 13362 L | 12059 L | 10938 L | 9966 L | 9118 L | 8374 L | 7717 L |
| 24x121 | 21,020 | - | - | - | 81429 L | 64339 L | 52115 L | 43070 L | 36191 L | 30837 L | 26589 L | 23162 L | 20357 L | 18032 L | 16084 L | 14436 L | 13028 L | 11817 L | 10767 L | 9851 L | 9047 L | 8338 L |

Limits T = Tension C = Compression D = Vertical Deflection L = Lateral Deflection

*Recommended Lower Flange Loading per pair of wheels

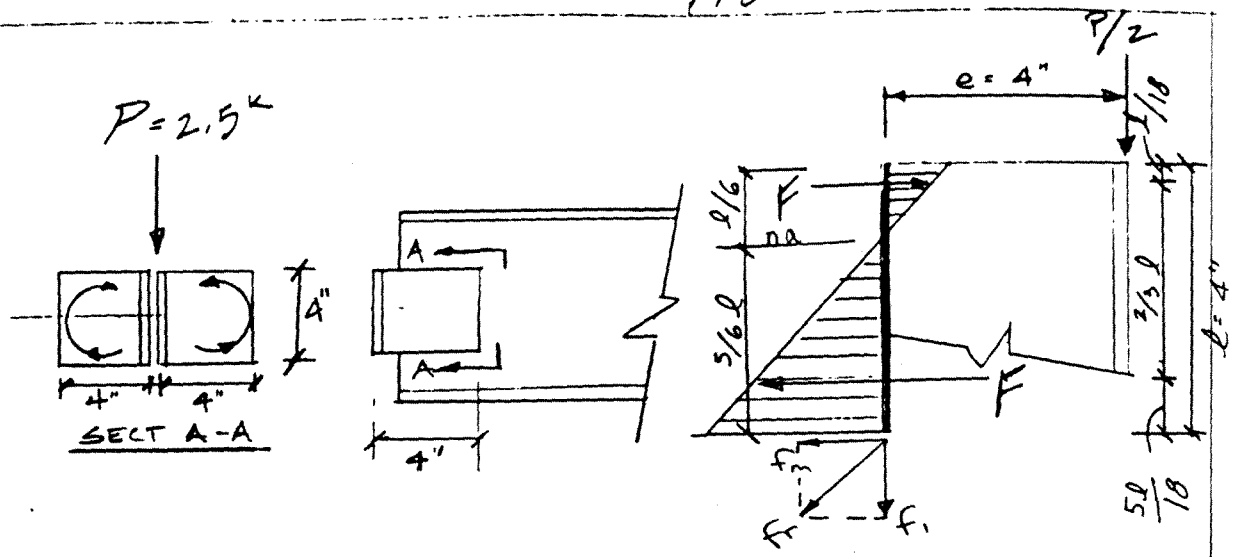


Horiz force $f_m$:

Moment each weld $= Pe/2 = F \times 2l/3$

But also $F = (f_m/2) \times 5l/6$

$\therefore Pe/2 = f_m/2 \times 5l/6 \times 2l/3$

and $f_m = 9Pe/5l^2$

$$= \frac{9(2.5)(4)}{5(4)^2} = 1.125 \text{ kips/lin. in}$$

Vert shear force, $f_1$:

$$f_1 = P/2l = 2.5/2(8) = 0.313 \text{ kips/lin. in}$$

Resultant force, $f_R$

$$f_r = \sqrt{f_1^2 + f_R^2} = \sqrt{(1.125)^2 + (.313)^2} = 1.168 \text{ kips/lin. in}$$

Reqd weld size (Return weld not included)

$0.928\,D = f_R = 1.168$

$D = 1.259$ sixteenths req'd

4 sixteenths
+3" return provided.

$\therefore$ OK

Ref: AISC Engr for Steel Construct
A Source Book on Connections, 1984
pg 1-39, Fig 1-36, (Example 11)

# Steel Interchange

*Steel Interchange* is an open forum for *Modern Steel Construction* readers to exchange useful and practical professional ideas and information on all phases of steel building and bridge construction. Opinions and suggestions are welcome on any subject covered in this magazine. If you have a question or problem that your fellow readers might help to solve, please forward it to *Modern Steel Construction*. At the same time feel free to respond to any of the questions that you have read here. Please send them to:

**Steel Interchange**
**Modern Steel Construction**
**1 East Wacker Dr.**
**Suite 3100**
**Chicago, IL 60601**

Answers and/or questions should be typewritten and double spaced. Submittals that have been prepared by word-processing are appreciated on computer diskette (either as a wordperfect file or in ASCII format).

The opinions expressed in *Steel Interchange* do not necessarily represent an official position of the American Institute of Steel Construction, Inc. It is recognized that the design of structures is within the scope and expertise of a competent licensed structural engineer, architect or other licensed professional for the application of principles to a particular structure.

Information on ordering AISC publications mentioned in this article can be obtained by calling AISC at 312/670-2400 ext. 433.

**In the AISC Manual, section 4, there is some information on moment connections. Several different types are shown. One opinion interprets them as "Fully Rigid" connections, able to make a rigid bent or frame. The opinion of the other side holds that they are intended to be "Semi-Rigid" connections intended for wind applications, etc., only. The first group cites the bolted end plate connection in the manual as being fully rigid. The other connections are welded and therefore must be rigid also. What is the intent of the moment connections in the AISC Manual?**

(Answer appears on following page.)

FIGURE 1: MOMENT ROTATION CURVES

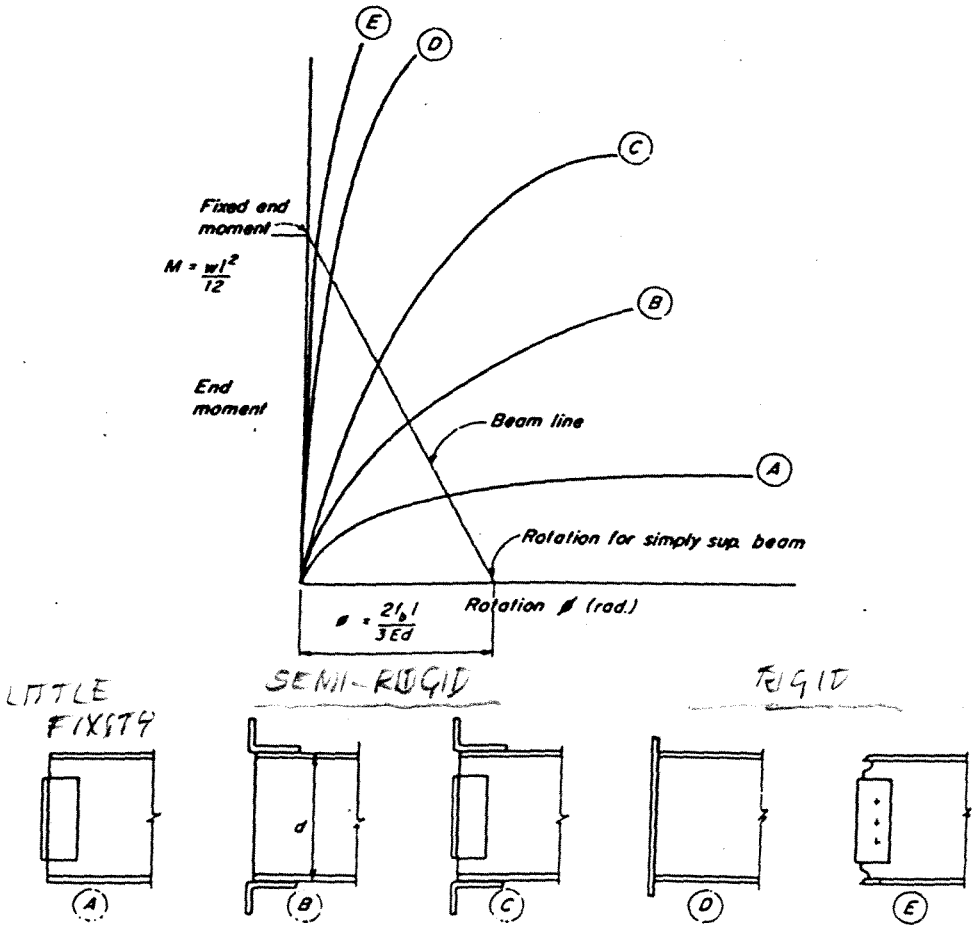

# Steel Interchange

The AISC publication *Manual of Steel Construction: Volume II - Connections* is a very helpful source in explaining the connection design terminology used by AISC. This publication will be available from AISC in the fall of 1992.

Simple shear connections are used when the frame is designed assuming that the members are unrestrained or free ended, that the ends of the beams are connected for shear only, and that the ends are free to rotate under gravity loading. Rigid frame, moment frame or continuous construction, identified as Type 1 in ASD and fully restrained in LRFD, assumes that the beam-column members are connected with sufficient rigidity to transfer the design moments with little or no rotation of the members relative to each other. The AISC Specification also allows semi-rigid framing, this type of construction assumes that the connections of beam-to-column members have a "dependable and known moment capacity intermediate in degree between rigid and simple construction".

In the real world that we all live in there probably is not a fully rigid connection nor is there a fully flexible connection. Figure 1 (previous page; this chart is reprinted from the AISC Manual) shows moment rotation curves for different types of connections. Type A is considered "simple" with little fixity; Types B and C are considered "semi-rigid"; and Types D and E, "rigid", are close to complete fixity.

The simple connections are connected for shear only, while the rigid connections normally would be developed for the indicated axial force in the flange areas on the basis of 100 percent fixity and would have a web or seat connection to develop the shear force.

The AISC Manual section on connection includes both simple shear connections and moment connections. It is the intent of the manual that the connections that are listed as simple be designed for shear; these are considered to be flexible connections. These connections would fall into Type A in Fig. 1. The connection section also labels some connections as moment connections. These connections are considered to be fully rigid and the design of them should be accordingly. These moment connections fall into Types D and E in Fig. 1.

As mentioned in the initial question, there also are "wind" connections. These connections are not fully rigid nor are they completely flexible. These connections are a simple, reliable and economical method of design. This type of connection is designed as if it were a simple shear connection in that the beam-to-column connection is assumed to be pinned and the members are sized for gravity loads. An independent lateral load analysis is next made, with certain connections assumed to be rigid. The selected connections are then designed for the calculated moment capacities.

The advantages of this design are: (1) simplified calculations and analysis; (2) beams and girders are designed on the basis of simple shear construction for gravity loads; and (3) the columns are designed as axially loaded members with applied wind moments.

The AISC *Engineering Journal* has published several articles on this type of connection including: "Wind Connections with Simple Framing" by Robert O. Disque in July of 1964 and "Simplified Frame Design of Type PR Construction" by Michael Ackroyd in the 4th quarter of 1987. The *Manual of Steel Construction: Volume II - Connections* will also include discussion and design examples of this type of connection.

---

**New Questions**

Listed below are some questions that we would like the readers to answer or discuss. If you have an answer or suggestion please send it to the Steel Interchange Editor. Questions and responses will be printed in future editions of Steel Interchange Also if you have a question or problem that readers might help solve, send these to the Steel Interchange Editor.

**1. What procedures should be followed when assessing steel that has been exposed to a fire?**

**2. How has the recent specification change allowing snug-tight high-strength bolting for certain types of shear/bearing connections affected your projects?**

**3. How do you decide when to use doubler plates and when to increase the size of the column?**

**4. What is a good "wind" connection for the top of a column?**

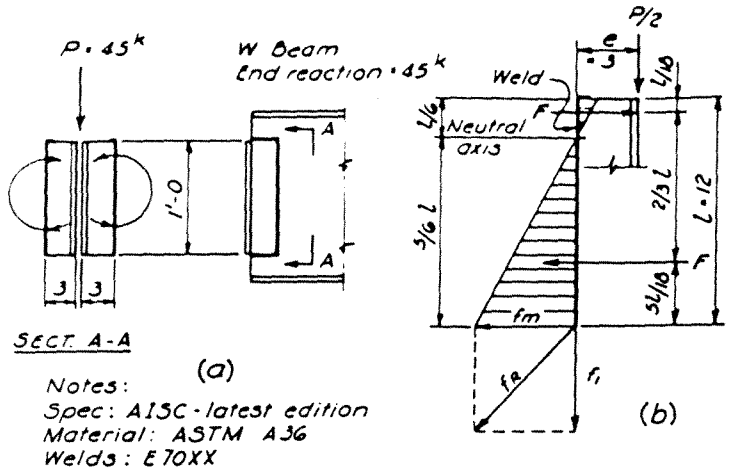


*Figure 1-36*

the angles together at the top against the beam web and spread them apart at the bottom (Section A-A). This twisting action is resisted by a relatively small area in compression at the top, and by shear in the welds increasing to a maximum at the bottom. To accommodate this, the neutral axis for bending is assumed to be at a distance one-sixth of the length of the vertical welds below the top, as shown in Fig. 1-36b.

Because the stress pattern is unsymmetrical about the neutral axis of the welds, the analysis of this problem differs from those previously discussed. To simplify the solution, the forces below the assumed neutral axis are replaced by one total force $F$ which is applied at the centroid of the triangular tensile stress pattern. The total force $F$ is equal to the area of that triangle, or

$$F = (f_m/2) \times (5l/6)$$

The force $F$ forms a couple with an equal and opposite force located above the neutral axis at the centroid of the triangular compressive stress pattern. This couple provides the resisting moment to the eccentric loading. Knowing the moment that must be resisted and the length of the weld, the values of $F$ and $f_m$ can be calculated.

**Example 11**—Using the data given in Fig. 1-36, calculate the values for $f_m$, $f_1$, $f_R$, and the weld size $D$ required to resist the eccentric loading of $P = 45$ kips.

*Solution:*

Horizontal force, $f_m$:

$$\text{Moment (each weld)} = Pe/2 = F \times 2l/3$$

But also,

$$F = (f_m/2) \times 5l/6$$

Therefore,

$$Pe/2 = f_m/2 \times 5l/6 \times 2l/3$$

and

$$f_m = 9Pe/5l^2$$

Substituting,

$$f_m = \frac{9 \times 45 \times 3}{5 \times 12^2}$$
$$= 1.69 \text{ kips/lin. in.}$$

Vertical shear force, $f_1$:

$$f_1 = P/2l = 45/24$$
$$= 1.88 \text{ kips/lin. in.}$$

Resultant force, $f_R$:

$$f_R = \sqrt{f_1^2 + f_m^2}$$
$$= \sqrt{1.88^2 + 1.69^2}$$
$$= 2.53 \text{ kips/lin. in.}$$

Required weld size:

$$0.928D = f_R = 2.53$$

$$D = 2.53/0.928$$
$$= 2.7 \text{ sixteenths (use } 3/16\text{-in. fillet welds)}$$

Table IV in Manual Part 4 gives a tabulation of weld capacities for connections of this design. A quick check can be made by referring to this table and noting than a 3 × 3 angle 12 in. long has a weld **B** capacity of 99.6 kips for a 3/8-in. fillet. Since weld values are linear in nature, a 3/16-in. weld would carry 99.6/2 = 49.8 kips × 2.7/3 = 44.8 kips, which verifies the above calculations. Tabulated Weld **B** capacities have been calculated on the basis of the modified elastic vector analysis method and are published in Ref. 14.

**Example 12**—Using the data given in Fig. 1-37, cal-

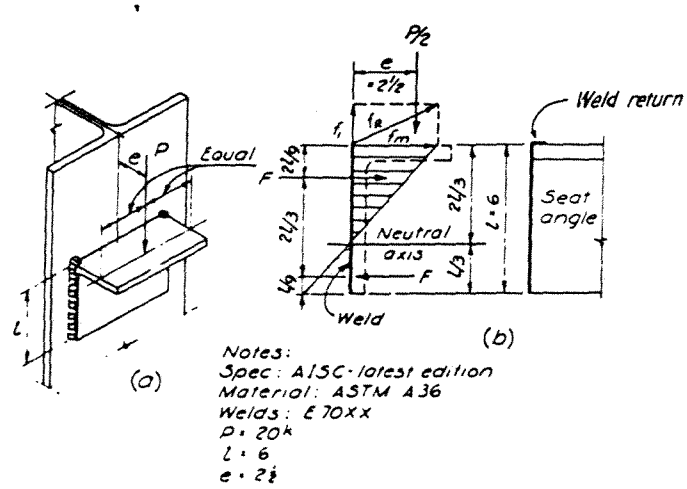


*Figure 1-37*

M-20

MANAGEMENT TECHNOLOGY NSI

MEMORANDUM

TO: Tom Wilson via Stanley Chan 10/16/96

FROM: L. Bennett

SUBJECT: Wallops Island Facility Building M20 Review of Roof Truss and Monorail Structure Calculations

DATE: September 30, 1996

COPIES:
S. Chan/NASA GSFC
A. Zorn/NSI GSFC
E. Hemminger/NSI GSFC
W. Hargrove/NSI Wallops
E. Ransome/NASA Wallops
M. Fillis/NASA Wallops

In reply refer to:
LHB 093096

REFERENCES:

(1) NASA Wallops Island Facsimile Transmission, Wallops Island Facility Building M20 Roof Truss and Monorail Structure Calculations, Tom Wilson to Mel Crompton, September 12, 1996. (Attachment)

NSI/GSFC Structural Analysis and Design section has recently reviewed the structural calculations on the roof structure, monorail, and subject hoist per Reference (1). It is our understanding that Wallops would like to rate the proposed hoist system for 3000 lb. They have correctly addressed the load line through the monorail and into the roof structure for gross beam sections. In order to qualify for a 3000 lb. rating, the roof structure needs to meet the Building Code requirement, considering 3750 lbs. (125% proof load) as a live load. We believe that this has been shown. For the hoist, each structural element must show adequate margins of safety regarding the requirements of NASA NSS/GO-1740.9B (Factor of Safety ≥ 3.0 on Yield Stress; Factor of Safety ≥ 5.0 on Ultimate Stress). In addition to the calculations presented, we recommend consideration of the following:

(1) Calculations on the Double Angle 4 x 4 x 3/8 Clips which connect the W8 x 31 6'-11" to the roof purlins. Are these welded or bolted to the beam webs? If welded, what size weld, and how many inches? If bolted, what size bolts, and how are they preloaded?

(2) Calculations on the connection from the W8 x 31 2'-0" to the W8 x 31 6'-11". Are these welded or bolted to the beam webs? If welded, what size weld, and how many inches? If bolted, what size bolts, and how are they preloaded?

(3) Calculations on the connection from the S12 x 31.8 20'-0" to the W8 x 31 2'- 0". Are these welded or bolted to the beam webs? If welded, what size weld, and how many inches? If bolted, what size bolts, and how are they preloaded?

(4) Calculations on the movable trolley which rides on the S12 x 31.8 20'-0" per CMAA - 74-3. These stress calculations involve local bending stresses on the flanges due to trolley motion under rated load.

Tom, please present a summary table with their calculations for clarity, showing part analyzed, stress calculated, and factor of safety on yield or ultimate.

Laurence H Bennett

L. H. Bennett
Project Engineer
Structural Analysis & Design
NSI/Code 750.5/GSFC
LHB/

Concurrence

Mel Crompton

M. Crompton
Project Engineer
Recertification
NSI Code 750.5/GSFC
MC/

**Facilities Management Branch**

# FACSIMILE TRANSMISSION

**From:** Tom Wilson

**Total Pages ( Including Lead )** 7

**Office Telephone:** 824-1570

**Date:** 9-12-96

Facilities Management Branch
Building N-161
Goddard Space Flight Center
Wallops Flight Facility
Wallops Island, Virginia 23337
FAX Number 824-1831
AC 804 824-1362

**TO:** ( Include Name, Mail Code, Telephone Number, Remarks)

MEL CROMPTON
NSI
69005 VOICE
60214 FAX

PER YOUR REQUEST VIA BILL HARGROVE
PLEASE FIND ATTACHED STRUCT. ANALYSIS OF ROOF TRUSS & MONORAIL STRUCT @ BUILDING M-20
LET ME KNOW IF MORE IS NEEDED. PLEASE NOTE [redacted] HOIST/STRUCT QUALIFIED WHEN NO SNOW & WINDS ≤ 60 MPH.

Tom Wilson

TIW 11-21-95

$P = 1\frac{1}{2}$ TON = 3000 LBS

TEST WT = 125% OF LOAD = 3750

TROLLEY / IMPACT INCREASE BY 15% = 4312.5 lbs

Add Hoist wt ≈ 160 lbs = 4,472.5
BM WT ADD 16'-3/16" 505.6
4978.1
SAY 5K

ASSUME P = 5000 LBS (5K)

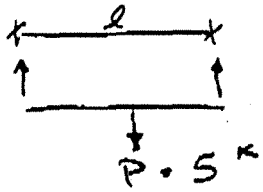


MAX IS @ CENTER SPAN OF BEAM

$$F = \frac{M}{S}$$

PER BOX ASSUME BEAM = S6 × 12.5

$S = 7.37\ IN^3$

$$M = SF = \frac{Pl}{4}$$

$$7.37\ IN^3 (.6)(36\ KSI) = \frac{Pl}{4}$$

$$159.192\ KIP\text{-}IN = \frac{Pl}{4}$$

$$636.768\ KIP\text{-}IN = Pl = 5^K (l_{MAX})$$

$$127.35 = l_{MAX}$$

$$\approx 10'\text{-}6'' = l_{MAX} - TRAVEL$$

TFW 11-21-95 2/6

TRY/ASSUME 20' SPAN (240")

$$M = \frac{Pl}{4} = \frac{5^k(240")}{4} = 300 \text{ IN-KIP}$$

$$f_{b_{ALLOW}} = \frac{M_{MAX}}{S_{MIN}} \; ; \quad S_{MIN} = \frac{M_{MAX}}{f_{b_{ALLOW}}}$$

$$S_{MIN} = \frac{300 \text{ IN-KIP}}{21.6 \frac{K}{IN^2}} = 13.9 \text{ IN}^3$$

LOOK @ S SHAPES

USE → S 8 x 18.4 $S = 14.4 \text{ IN}^3$

$d = 8"$

$I = 57.6 \text{ IN}^4$

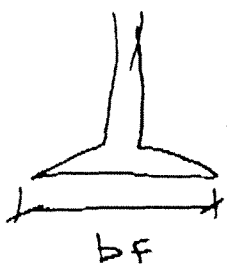


$b_f$ S8 x 18.4 = 4"

$b_f$ S6 x 12.5 = 3 3/8"

CHECK DEFLECTION

$$\Delta = \frac{Pl^3}{48EI} = \frac{5^k(240)^3}{48(29{,}000^{KSI})(57.6 \text{ IN}^4)} = .86"$$

TOO HIGH

KEEP UNDER 1/4"

$$I = \frac{5^k(240)^3}{(.25)\,48(29{,}000)} = 198 \text{ IN}^4$$

TRY ~~S10 x 25~~ S12 x 31.8

$b_f = 5"$

$S = 36.4 \text{ IN}^3$

$I = 218 \text{ IN}^4$

$$f_b = \frac{300 \text{ IN-KIP}}{36.4 \text{ IN}^3} = 8.24 \text{ KSI}$$

$$\Delta = \frac{5^k(240)^3}{48(29{,}000)\,218} = 0.228 \text{ IN} \quad \text{OK}$$

TTN 11-21-95

3/6

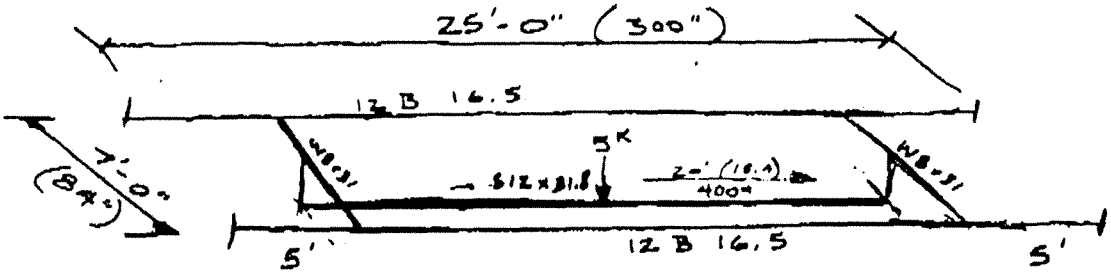


CHECK SPAN MEMBER OF S 12 x 31.8 RUNWAY

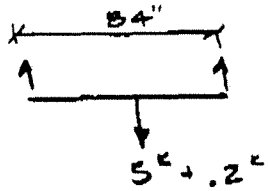


$$M_{MAX} = \frac{Pl}{4} = \frac{(5.2^K)\ 84\ IN}{4} = 109\ IN\text{-}KIP$$

$$S_{MIN} = \frac{M}{f_{b\,MAX}} = \frac{109\ IN\text{-}KIP}{21.6\ KSI} = 5.06\ IN^3 < 36.4\ IN^2 \quad \therefore \underline{OK}$$

CHECK 12 B 16.5 ROOF PURLINS

DL = 20 #/SF
SNOW = 15 #/SF
WIND = 20 #/SF
W = 55 # SF
x 7 = 385 #/LF

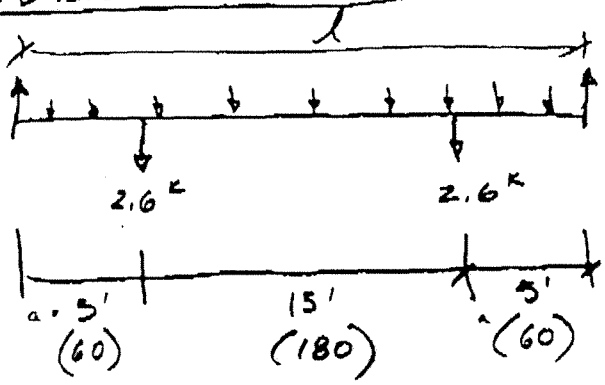

$$M = \frac{wl^2}{8}$$

$$M = \frac{(.032)(300)^2}{8}$$

$$M = 360.9\ IN\text{-}K$$

$$M_{MAX} = Pa = (2.6^K)(60) = 156\ IN\text{-}K$$

$$M = 156 + 361 = 517\ IN\text{-}K$$

$$f_b = \frac{M}{S} = \frac{517\ IN\text{-}K}{17.5\ IN^3} = 29.5\ KSI$$

$$F_b = .6\,F_y\,(1.33) = 28.8\ KSI$$

NO GOOD
FULLY LOADED

TTW- 11-21-95 4/6

Tig
Reduced for Snow & Wind Loads

Roof = 20 psf DL
10 psf LL

30 psf × 7 FT. = 210 plf
17 plf (beam wt)
227 #/lf
or 19 #/in say 20
or 0.02 k/in

$M = \frac{wl^2}{8} \quad \frac{.02(300)^2}{8} = 225$ IN-K

$M = Pa = (2.6)(60) = 136$ IN-K

$M_{TOTAL} = 361$ IN-K

$f_b = \frac{M}{S} = \frac{361 \text{ IN-K}}{17.5 \text{ IN}^3} = 20.6$ KSI

$F_{b\ ALLOW} = 21.6$ KSI $> 20.6$ KSI $f_{b\ (ACT)}$

HOIST MAY BE OPERATING WITH WIND CONDITION PRODUCING LESS THAN 10 PSF PERPINDICULAR TO ROOF USING HEIGHT OF BLDG AS 30' ON MAIN BASE WIND SPEED SHALL BE LESS THAN 60 MPH AND NO SNOW LOAD. TO QUALIFY ROOF PURLINS ABOVE. SNOW LOAD ON ½ OF ONE TRUSS ≈ 25' × 42' × 15 psf = 15.75 K > 5K LIFT LOAD ∴ TRUSS OK

<u>IN CONCLUSION</u>: M-20 ROOF IS RATED FOR A 1.5 TON HOIST WITH <u>NO</u> ADVERSE WEATHER CONDITIONS SNOW OR EXTREME WIND ACTING ON ROOF STRUCTURE.

5/6

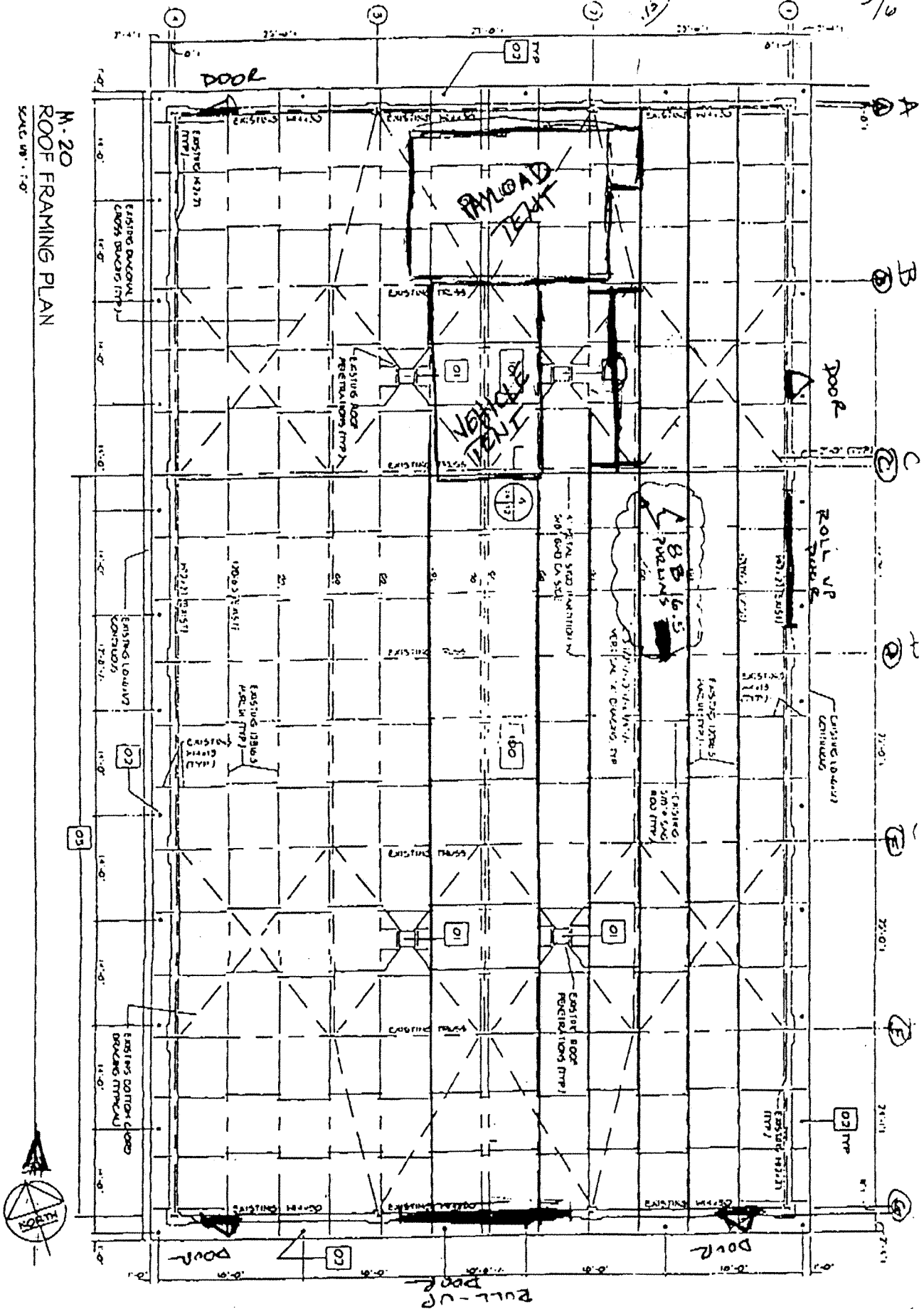


SHEET 2/3

REFERENCE WFF DWG. 2868

5/9/96

M-20 HOIST TOM WILSON 4-1-96

6/6

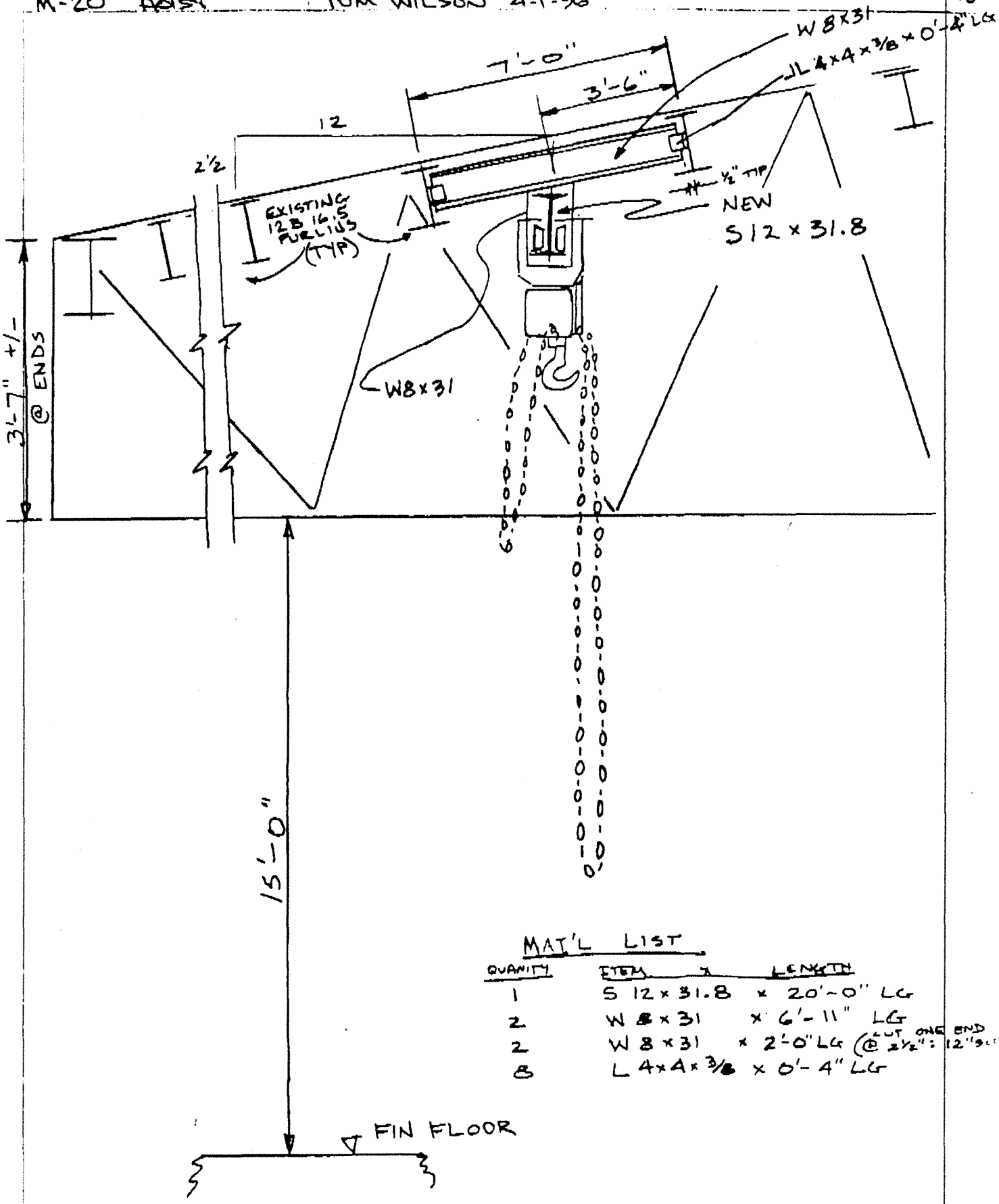


MAT'L LIST

| QUANITY | ITEM | LENGTH |
|---|---|---|
| 1 | S 12 x 31.8 | x 20'-0" LG |
| 2 | W 8 x 31 | x 6'-11" LG |
| 2 | W 8 x 31 | x 2'-0" LG (@ 2½": 12" SLOT ONE END |
| 8 | L 4x4x3/8 | x 0'-4" LG |

FAILURE MODE AND EFFECTS ANALYSIS (FMEA) WORKSHEET

SYSTEM: BUILDING M-20
SUBSYSTEM: ONE AND ONE-HALF TON HAND CHAIN HOIST

DATE: SEPTEMBER 1996
PREPARED BY: M. CROMPTON

| INDEX NO. | PART NAME | PART FUNCTION | A. FAILURE MODE<br>B. CAUSE<br>C. DETECTION METHOD<br>D. CORRECTING ACTION<br>E. TIME TO EFFECT | FAILURE EFFECT ON SYSTEM PERFORMANCE | FAILURE EFFECT ON CRITICAL HARDWARE AND/OR PERSONNEL SAFETY | CRIT CAT |
|---|---|---|---|---|---|---|
| 67 & 67A<br>n.3.3.4 | BRAKE FRICTION DISCS | PROVIDES BRAKING ABILITY TO THE HOIST SYSTEM | A. FAILS TO ENGAGE<br>B. EXCESSIVE WEAR, GLAZING OIL CONTAMINATION<br>C. LOAD CREEPS DOWN, DAILY AND PERIODIC SAFETY INSPECTIONS LOAD TEST<br>D. REPLACE DISCS<br>E. FUNCTION OF SERVICE CONDITIONS | CATASTROPHIC FAILURE OF THE BRAKE WILL ALLOW THE LOAD TO DROP | LOAD WILL DROP, COULD CAUSE DAMAGE TO FLIGHT HARDWARE AND/OR PERSONNEL INJURY | 2 |
| 17, 18, 19, 43, & 78<br>n.3.2 | PAWL ASSEMBLY INCLUDING PAWL, STUD, LOCKWASHER SPRING & ROLL PIN | FUNCTIONS TO ENGAGE RATCHET TO PREVENT REVERSE MOTION | A. FAILS TO ENGAGE, STRUCTURAL FAILURE<br>B. EXCESS WEAR, CORROSION, STRETCHED SPRING, BINDING CHECK DURING LOAD<br>C. HOOK DRIFT<br>D. INSPECTION/ REPLACEMENT<br>E. FUNCTION OF SERVICE CONDITIONS | FAILURE OF THE PAWL ASSEMBLY WILL ALLOW THE LOAD TO DROP | LOAD WILL DROP, COULD CAUSE DAMAGE TO FLIGHT HARDWARE AND/OR PERSONNEL INJURY | 2 |

FAILURE MODE AND EFFECTS ANALYSIS (FMEA) WORKSHEET

SYSTEM: BUILDING M-20
SUBSYSTEM: ONE AND ONE-HALF TON HAND CHAIN HOIST

DATE: SEPTEMBER 1996
PREPARED BY: M. CROMPTON

| INDEX NO. | PART NAME | PART FUNCTION | A. FAILURE MODE<br>B. CAUSE<br>C. DETECTION METHOD<br>D. CORRECTING ACTION<br>E. TIME TO EFFECT | FAILURE EFFECT ON SYSTEM PERFORMANCE | FAILURE EFFECT ON CRITICAL HARDWARE AND/OR PERSONNEL SAFETY | CRIT CAT |
|---|---|---|---|---|---|---|
| 7<br>7.3.2 | RATCHET ASSEMBLY | ENGAGES PAWL ASSEMBLY TO PREVENT REVERSE MOTION | A. FAILS TO ENGAGE<br>B. WEAR, BINDING WORN BEARING CAUS DURING LOAD<br>C. HOOK DRIFT<br>D. INSPECTION/ REPLACEMENT<br>E. FUNCTION OF SERVICE CONDITIONS | FAILURE OF THE RATCHET ASSEMBLY WILL ALLOW THE LOAD TO DROP | LOAD WILL DROP, COULD CAUSE DAMAGE TO FLIGHT HARDWARE AND/OR PERSONNEL INJURY | 2 |
| 59<br>7.3.3.2 | GEAR | PROVIDES MECHANICAL COUPLING BETWEEN THE PINION SHAFT AND THE LOAD LINE | A.1 FAILS STRUCTURALLY<br>B.1 OVERLOAD<br>C.2 NOISY OPERATION AUDIO<br>D.1 DAILY INSPECTION<br>E.1 IMMEDIATELY | FAILURE OF THE GEAR WILL ALLOW THE LOAD TO DROP | LOAD WILL DROP, COULD CAUSE DAMAGE TO FLIGHT HARDWARE AND/OR PERSONNEL INJURY | 2 |
| 60<br>7.3.3.2 | PINION SHAFT | PROVIDES COUPLING BETWEEN THE HOIST INPUT AND OUTPUT FUNCTIONS | A.2 FAILS STRUCTURALLY<br>B.2 OVERLOAD<br>C.2 NOISY OPERATION AUDIO<br>D.2 DAILY INSPECTION<br>E.2 IMMEDIATELY | FAILURE OF THE PINION SHAFT WILL ALLOW THE LOAD TO DROP | LOAD WILL DROP, COULD CAUSE DAMAGE TO FLIGHT HARDWARE AND/OR PERSONNEL INJURY | 2 |

FAILURE MODE AND EFFECTS ANALYSIS (FMEA) WORKSHEET

SYSTEM: BUILDING M-20
SUBSYSTEM: ONE AND ONE-HALF TON HAND CHAIN HOIST

DATE: SEPTEMBER 1996
PREPARED BY: M. CROMPTON

| INDEX NO. | PART NAME | PART FUNCTION | A. FAILURE MODE<br>B. CAUSE<br>C. DETECTION METHOD<br>D. CORRECTING ACTION<br>E. TIME TO EFFECT | FAILURE EFFECT ON SYSTEM PERFORMANCE | FAILURE EFFECT ON CRITICAL HARDWARE AND/OR PERSONNEL SAFETY | CRIT CAT |
|---|---|---|---|---|---|---|
| 61, 62, & 63<br>7.3.3.2 | BEARINGS | REDUCES SHAFT TO LOAD HANDLING PART FRICTION AND MAINTAINS PART ALIGNMENT | A. COMPRESSION FAILURE<br>B. OVERLOADING<br>AUDIO | HOIST SYSTEM INOPERATIVE | DELAY FOR REPAIRS | 3 |
| 33<br>7.3.3.2 | BRAKE HUB | FUNCTIONS AS A PRESSURE PLATE TO PERMIT THE BRAKING MECHANISM TO AUTOMATICALLY STOP AND HOLD THE LOAD | A. SLIPPAGE UNDER LOAD<br>B. EXCESSIVE WEAR, SCORING<br>C. LOAD CREEPS DOWN<br>D. DAILY INSPECTION REPLACEMENT<br>E. FUNCTION OF SERVICE CONDITIONS<br>LOAD TEST | CATASTROPHIC FAILURE OF THE LOAD FLANGE WILL ALLOW THE LOAD TO DROP | LOAD WILL DROP, COULD CAUSE DAMAGE TO FLIGHT HARDWARE AND/OR PERSONNEL INJURY | 2 |
| 8 | LOAD SHEAVE | PROVIDES COUPLING BETWEEN THE HOIST OUTPUT AND THE INPUT FUNCTIONS | A. FAILS STRUCTURALLY<br>B. OVERLOAD<br>C. DAILY INSPECTION, DISTORTION, CRACKS, EXCESSIVE WEAR<br>D. INSPECTION/ REPLACEMENT<br>E. FUNCTION OF SERVICE CONDITIONS<br>LOAD TEST VISUAL | FAILURE OF THE LOAD SHEAVE WILL ALLOW THE LOAD TO DROP | LOAD WILL DROP, COULD CAUSE DAMAGE TO FLIGHT HARDWARE AND/OR PERSONNEL INJURY | 2 |

FAILURE MODE AND EFFECTS ANALYSIS (FMEA) WORKSHEET

SYSTEM: BUILDING M-20
SUBSYSTEM: ONE AND ONE-HALF TON HAND CHAIN HOIST

DATE: SEPTEMBER 1996
PREPARED BY: M. CROMPTON

| INDEX NO. | PART NAME | PART FUNCTION | A. FAILURE MODE<br>B. CAUSE<br>C. DETECTION METHOD<br>D. CORRECTING ACTION<br>E. TIME TO EFFECT | FAILURE EFFECT ON SYSTEM PERFORMANCE | FAILURE EFFECT ON CRITICAL HARDWARE AND/OR PERSONNEL SAFETY | CRIT CAT |
|---|---|---|---|---|---|---|
| SEE FIGURE 1 | PLAIN TROLLEY | TRAVELS ON STANDARD I-BEAM AND SUPPORTS THE LOAD | A. FAILS STRUCTURALLY<br>B. OVERLOAD<br>C. ROUGH MOVEMENT, DAILY INSPECTION, WEAR VISUAL AUDIO<br>D. INSPECTION/ REPLACEMENT<br>E. FUNCTION OF SERVICE CONDITIONS | FAILURE OF THE TROLLEY WILL ALLOW THE LOAD TO DROP | LOAD WILL DROP, COULD CAUSE DAMAGE TO FLIGHT HARDWARE AND/OR PERSONNEL INJURY | 2 |

5.2 Electrical FMEA Worksheets and Block Diagrams

There are no electrical functions associated with this equipment.

5.3 Flex Hose FMEA Worksheets

There are no flex hoses associated with this equipment.

5.4 Orifice FMEA Worksheets

There are no orifices associated with this equipment

5.5 Filter FMEA Worksheets

There are no filters associated with this equipment.

5.6 Requirements of NSS/GO-1740.9B

The design of the one and one-half ton hand chain hoist is compliant with the requirements of NSS/GO-1740.9B, "NASA Safety Standard for Lifting Devices and Equipment."

5.6.1 Manually operated (nonpowered), off-the-shelf OEM type hoists are acceptable for critical and noncritical lift applications. They shall comply with applicable ANSI requirements. These hoists shall have at least one brake as described by industry standards. No limit switches are required if proper over-travel restraint is provided.

5.6.2 The following recommendations are reproduced from the manufacturer's Publication No. CB-680-7, "Operating and Maintenance Instructions."

> The hoist is intended for general industrial use for lifting, pulling, and tensioning-type applications within its rated load. Do not use the hoist in areas containing flammable vapors, liquids, gases or any combustible dusts or fibers. This hoist is not recommended for use in lifting or transporting hazardous loads or materials which could cause wide spread damage if dropped.

## 5.7 Critical Items List

Eight Critical Items were identified in this analysis. These items are summarized on the following Critical Items List. The Critical Items are defined as Single Failure Points (SFP) in accordance with NSTS 22206, Revision D.

| ITEM | QUANTITY | CRITICALITY |
|---|---|---|
| a. Brake Friction Discs | 2 | 2 |
| b. Pawl Assembly | 1 | 2 |
| c. Ratchet Assembly | 1 | 2 |
| d. Gear | 1 | 2 |
| e. Pinion Shaft | 1 | 2 |
| f. Brake Hub | 1 | 2 |
| g. Load Sheave | 1 | 2 |
| h. Plain Trolley | 1 | 2 |

### 5.7.1 Critical Item Acceptance Rationale Sheets

The technical rationale for accepting the risk of retaining the Critical Items is documented on the following Critical Item Sheets.

System/Area: One and one-half ton Coffing Hand Chain Hoist/Building M-20

Critical Item: Disc Brake
Criticality Category: 2

Item No.: 67 and 67A, see Figure 2

Function: Provides braking ability to the hoist

Critical Failure Mode: Fails to engage

Failure Cause: Excessive disc wear, glazing and/or oil contamination

Failure Effect: Load will drop, could cause damage to flight hardware

Failure Mode: The most probable failure mode would result in the load creeping down. A certified operator is trained in the special hazards and special procedures associated with the lift and to mitigate the effects of this deficiency.

Critical Item: Pawl Assembly
Criticality Category: 2

Item: Pawl Assembly, includes:

| Item No. | Part Name |
|---|---|
| 17 | Pawl |
| 18 | Pawl Stud |
| 19 | Pawl Lockwasher |
| 43 | Pawl Spring |
| 78 | Torsion Spring (Pawl) |

Function: To engage ratchet to prevent reverse motion.

Critical Failure Mode: Fails to engage/structural failure

Failure Cause: Excess wear, corrosion, stretched spring, binding

Failure Effect: Failure of the pawl assembly will allow the load to drop

Failure Mode: The most probable failure mode would result in the load creeping down. A certified operator is trained in the special hazards and special procedures associated with the lift and to mitigate the effects of this deficiency.

Critical Item: Ratchet Assembly
Criticality Category: 2

Item No.: 7, see Figure 2

Function: Engages pawl assembly to prevent reverse motion

Critical-Failure Mode: Fails to engage

Failure Cause: Wear, binding, worn bearing

Failure Effect: Failure of the ratchet assembly will allow the load to drop

Failure Mode: The most probable failure mode would result in the load creeping down. A certified operator is trained in the special hazards and special procedures associated with the lift and to mitigate the effects of this deficiency.

Critical Item: Gear
Criticality Category: 2

Item No.: 59, see Figure 2

Function: Provides mechanical coupling between the pinion shaft and the load line

Critical Failure Mode: Fails structurally

Failure Cause: Overload; cracks, distortion, worn or broken teeth; inadequate lubrication

Failure Effect: Failure of the gear will allow the load to drop NSTS 22206 requires that gear boxes, speed reducers, and couplings shall be considered Single Failure Points if they are located between the drum and the nearest brake.

Failure Mode: The most probable failure mode would result in the load creeping down. A certified operator is trained in the special hazards and special procedures associated with the lift and to mitigate the effects of this deficiency.

Operational Use: NSS/GO-1740.9B requires that hoists not be loaded beyond the rated load except during authorized tests. An LDE operator training, examination, and licensing program is in place, in accordance with NSS/GO-1740.9B, Paragraph 405.a.

Critical Item: Pinion Shaft
Criticality Category: 2

Item No.: 60, see Figure 2

Function: Provides coupling between the hoist input and output functions.

Critical Failure Mode: Fails structurally

Failure Cause: Overload; distortion, cracks, excessive wear and inadequate lubrication

Failure Effect: Failure of the pinion shaft will allow the load to drop

Failure Mode: The most probable failure mode would result in the load creeping down. A certified operator is trained in the special hazards and special procedures associated with the lift and to mitigate the effects of this deficiency.

Operational Use: NSS/GO-1740.9B requires that hoists not be loaded beyond the rated load except during authorized tests. An LDE operator training, examination, and licensing program is in place, in accordance with NSS/GO-1740.9B, Paragraph 405.a.

Critical Item: Load Sheave
Criticality Category: 2

Item No.: 8, see Figure 2

Function: Provides coupling between the hoist input and output functions.

Critical Failure Mode: Fails structurally

Failure Cause: Overload; distortion, cracks, and excessive wear

Failure Effect: Failure of the load sheave will allow the load to drop

Failure Mode: The most probable failure mode would result in the load creeping down. A certified operator is trained in the special hazards and special procedures associated with the lift and to mitigate the effects of this deficiency.

Operational Use: NSS/GO-1740.9B requires that hoists not be loaded beyond the rated load except during authorized tests. An LDE operator training, examination, and licensing program is in place, in accordance with NSS/GO-1740.9B, Paragraph 405.a.

Critical Item: Brake Hub
Criticality Category: 2

Item No.: 33, see Figure 2

Function: Functions as a pressure plate to permit the braking mechanism to automatically stop and hold the load

Critical Failure Mode: Slippage or excessive drift under load

Failure Effect: Catastrophic failure of the brake hub will allow the load to drop.

Failure Mode: The most probable failure mode would result in slippage under load.

Critical Item: Plain Trolley
Criticality Category: 2

Item No.: Push/pull, manual, plain trolley

Function: Provides lateral movement of the load

Critical Failure Mode: Fails structurally

Failure Cause: Damage or wear which restricts ability to support imposed loads

Failure Mode: The most probable failure mode would result in jerky, rough, and noisy operations due to misalignment resulted from damage or wear. An increased tractive effort would be required to position the trolley. A certified operator is trained in the special hazards and special procedures associated with the lift and to mitigate the effects of this deficiency.

## ACCEPTANCE RATIONALE

The above mentioned critical items, i.e., Disk Brake, Pawl Assembly, Ratchet Assembly, Gear, Pinion Shaft, Load Sheave, Brake Hub, and Plain Trolley are accepted based on the following:

Design:

The use of high quality, off-the-shelf, OEM type equipment is acceptable for Critical and non-Critical lift applications. The one and one-half ton hand chain hoist meets the requirements of NSS/GO-1740.9B.

Test:

- Test and inspection will be performed by qualified personnel according to approved NSI Procedure 44-06-461.
- Hoist will be operated through its entire length of travel prior to each Critical lift or once a day if multiple lifts are to be performed. Log books will be completed noting any possible problems.
- Hoist will be proof load tested to 125% after installation and prior to first use.
- Hoist system will be load tested at 100% rated load annually.

Inspection:

- NSI Procedure 44-06-461 will provide specific instructions pertinent to the Critical Items identified in this analysis.
- Daily inspection will be performed by the operator prior to first use each day the hoist is used, in accordance with the requirements of NSS/GO-1740.9B, "NASA Standard for Lifting Devices and Equipment."

Failure History: There is no history of critical item failures or unexplained anomalies.

Operational Use:

- Provisions for redundancy are not required in accordance with Paragraph 401.f.(7) of NSS/GO-1740.9B.
- An operator shall be at the hoist controls at all times while a load is suspended.
- In accordance with Paragraph 406.b.(16) of NSS/GO-1740.9B:

> When raising loads that approach the rated capacity of the hoist, the operator shall know the weight of the working load. The operator shall test the holding brakes each time a load approaching the rated load is handled. The

brakes shall be tested by raising the load minimally above the surface and holding the load with the brake. The load should be held long enough to allow any dynamics to dampen out.

- NSS/GO-1740.9B requires that hoists shall not be loaded beyond the rated load except during authorized tests. An LDE operator training, examination, and licensing program is in place, in accordance with NSS/GO-1740.9B, Paragraph 405.a.

# SECTION 6 - OPERATING AND SUPPORT HAZARD ANALYSIS (O&SHA)

## 6.1 Objectives

This Operating and Support Hazard Analysis for the one and one-half ton hand chain hoist to be located in Building M-20 identifies potential hazards, evaluates their risk level, and provides the mechanism for their elimination and control. Failure of passive components and generic hazards are evaluated. Areas reviewed in this analysis are as follows:

a. Concerns that could cause death/injury to personnel or loss/damage to flight hardware.

b. Design issues that effect normal operation of the lifting system.

Those conditions found in the Building M-20 environment - human relationship that could cause potential sources of danger are not part of this analysis. The latter analyses shall be combined, by others under the cognizance of the Project Office, with the analysis herein to develop the Systems Hazard Analysis (SHA).

## 6.2 O&SHA Worksheets

An analysis of the aforementioned concerns was performed and documented on the following O&SHA worksheets.

OPERATING AND SUPPORT HAZARD ANALYSIS (O&SHA) WORKSHEET

SYSTEM: BUILDING M-20 CATEGORY: CRITICAL APPLICATION PHASE: LIFTING OPERATION DATE: SEPTEMBER 1996
SUBSYSTEM: ONE AND ONE-HALF TON HAND CHAIN HOIST PREPARED BY: M. CROMPTON
CLOSURE CONCURRENCE: _____ PROJECT MANAGER _____ DEPUTY RECERT MANAGER

| HAZARDOUS CONDITION | HAZARD CAUSE | HAZARD EFFECT | SEVERITY | SAFETY REQUIREMENTS | HAZARD ELIMINATION/ CONTROL PROVISIONS | LIKELIHOOD OF OCCURRENCE | STATUS | VERIFICATION ACTIONS |
|---|---|---|---|---|---|---|---|---|
| H1-HOIST CAPACITY EXCEEDED | OPERATOR UNFAMILIAR WITH HOIST OPERATION | LOAD WILL DROP. COULD CAUSE DAMAGE TO FLIGHT HARDWARE AND/OR PERSONNEL INJURY | CATASTROPHIC | NSS/GO-1740.9B:<br>• PARA. 406.b.(4) REQUIRES THAT HOISTS NOT BE LOADED BEYOND RATED LOAD EXCEPT DURING AUTHORIZED TESTS.<br>• PARA. 405.b.(2) REQUIRES CRITICAL LIFT OPERATORS TO BE TRAINED IN THE SPECIFIC HAZARDS AND SPECIAL PROCEDURES ASSOCIATED WITH THE LIFT. | GSFC REQUIRES APPROVED TECHNICAL INSPECTION PROCEDURES FOR LIFTING DEVICES AND EQUIPMENT (LDE).<br><br>AN LDE OPERATOR TRAINING, EXAMINATION AND LICENSING PROGRAM IS IN PLACE, IN ACCORDANCE WITH NSS/GO-1740.9B, PARA. 405.a. | REMOTE | OPEN | • FMEA: NSI NO. 40-01-661<br>• INSPECTION PROCEDURES<br>• OPERATOR CERTIFICATION<br>• PRE-LIFT BRIEFING |
| H2-HOIST UNSATISFACTORY FOR USE | NONCOMPLIANT WITH INSPECTION AND MAINTENANCE REQUIREMENTS | LOSS OF FLIGHT HARDWARE OR EQUIPMENT AND/OR INJURY TO PERSONNEL | CATASTROPHIC | GMI 1710.6B ESTABLISHES THE POLICY AND REQUIREMENTS OF THE RECERT PROGRAM TO MEET THOSE OF NSS/GO-1740.9B. | THE RECERT GROUP PERFORMS TESTS AND INSPECTIONS TO MAINTAIN LDE CERTIFICATION STATUS CURRENT.<br><br>GSFC REQUIRES APPROVED TECHNICAL INSPECTION PROCEDURES FOR LIFTING DEVICES AND EQUIPMENT (LDE). | REMOTE | OPEN | • REVIEW TEST AND INSPECTION REPORTS<br>• LDE CERTIFICATION STATUS<br>• PERFORM DAILY INSPECTION |
| | | | | PARA. 401.f.(1) OF NSS/GO-1740.9B REQUIRES THAT HOIST COMPONENTS MEET ALL APPLICABLE REQUIREMENTS OF OSHA, ANSI, AND CMAA. | GMI 1710.6 REQUIRES THAT LIFTING DEVICES BE DESIGNED, FABRICATED, AND CERTIFIED IN ACCORDANCE WITH APPLICABLE CODES, STANDARDS, AND RECERT PROCEDURES.<br><br>VERIFY FACTOR OF SAFETY EQUAL TO 3 TIMES YIELD AND 5 TIMES ULTIMATE. | EXISTING | OPEN | • FMEA/O&SHA: NSI NO. 40-01-661<br>• VERIFY LDE CERTIFICATION |
| H3-INADEQUATE SUPPORT STRUCTURE | SUPPORT STRUCTURE LOAD RATING DEFICIENT. "HOIST/ STRUCTURE QUALIFIED WHEN NO SNOW AND WINDS ≤ 60 MPH" | LOSS OF FLIGHT HARDWARE OR EQUIPMENT AND/OR INJURY TO PERSONNEL | CATASTROPHIC | BUILDING DESIGN CONSIDERATIONS SHALL BE IN ACCORDANCE WITH ANSI B30.16 REQUIREMENTS | PERFORM DESIGN AND ANALYSIS TO QUALIFY ROOF STRUCTURE IN EXISTING BUILDING, IN ACCORDANCE WITH CMAA SPECIFICATION #70. INSTALL WARNING SIGN(S). | REMOTE | OPEN | • FMB ROOF STRUCTURAL ANALYSIS TITLE: _____<br>DATE: _____<br>• WARNING SIGN(S)<br>• CHECK WEATHER CONDITIONS |

OPERATING AND SUPPORT HAZARD ANALYSIS (O&SHA) WORKSHEET

SYSTEM: BUILDING M-20 CATEGORY: CRITICAL APPLICATION PHASE: LIFTING OPERATION DATE: SEPTEMBER 1996
SUBSYSTEM: ONE AND ONE-HALF TON HAND CHAIN HOIST PREPARED BY: M. CROMPTON
CLOSURE CONCURRENCE: _____ PROJECT MANAGER _____ DEPUTY RECERT MANAGER

| HAZARDOUS CONDITION | HAZARD CAUSE | HAZARD EFFECT | SEVERITY | SAFETY REQUIREMENTS | HAZARD ELIMINATION/ CONTROL PROVISIONS | LIKELIHOOD OF OCCURRENCE | STATUS | VERIFICATION ACTIONS |
|---|---|---|---|---|---|---|---|---|
| H4-INADEQUATE WORKING SPACE | INADEQUATE SPACE TO PERMIT OPERATOR TO STAND CLEAR OF LOAD AND ADJACENT STRUCTURES | LOSS OF FLIGHT HARDWARE OR EQUIPMENT AND/OR INJURY TO PERSONNEL | CATASTROPHIC | OPERATIONS SHALL BE IN ACCORDANCE WITH PARA. 406 OF NSS/GO-1740.9B. | CRITICAL LIFT OPERATORS MUST BE TRAINED IN THE SPECIFIC HAZARDS AND SPECIAL PROCEDURES ASSOCIATED WITH THE LIFT. | REMOTE | OPEN | • REVIEW CRITICAL LIFT PROCEDURE<br>• VERIFY CRITICAL LIFT OPERATOR CERTIFICATION |
| H5-IMPROPERLY SEATED LOAD | LOAD UNSECURED IN HOOK OR HAND CHAIN IS IMPROPERLY SEATED IN THE HAND CHAIN WHEEL. LIFTING BELOW CG IMBALANCED LOAD | LOSS OF FLIGHT HARDWARE OR EQUIPMENT AND/OR INJURY TO PERSONNEL | CATASTROPHIC | PARA. 101.C.(1)(c) OF NSS/GO-1740.9B REQUIRES THAT SPECIFIC WRITTEN PROCEDURES BE PREPARED AND FOLLOWED FOR CRITICAL LIFTS. | CRITICAL LIFT OPERATORS MUST BE TRAINED IN THE SPECIFIC HAZARDS AND SPECIAL PROCEDURES ASSOCIATED WITH THE LIFT. | REMOTE | OPEN | •REVIEW CRITICAL LIFT PROCEDURE<br>• CONDUCT PRE-LIFT BRIEFING<br>• PERFORM STABILITY ANALYSIS |
| H6-OPERATION WITH AN UNSAFE CONDITION | DEFICIENT HOOK, BRAKE, LOAD CHAIN, ETC. | LOSS OF FLIGHT HARDWARE OR EQUIPMENT AND/OR INJURY TO PERSONNEL | CATASTROPHIC | PARA. 406.b.(3) OF NSS/GO-1740.9B REQUIRES THAT THE OPERATOR TEST ALL CONTROLS PRIOR TO OPERATION. | PARA. 403.f. OF NSS/GO-1740.9B REQUIRES THAT ALL INADEQUACIES BE CORRECTED PRIOR TO FURTHER USE. | REMOTE | OPEN | • CHECK GREEN LOG BOOK<br>• PERFORM DAILY INSPECTION<br>• VERIFY LDE RECERT STATUS |
| H7-IMPROPER OPERATION | SIDE LOADING | LOSS OF FLIGHT HARDWARE OR EQUIPMENT (FRACTURED HOIST HOUSING) AND/OR INJURY TO PERSONNEL | CATASTROPHIC | PARA 406.b.(13) OF NSS/GO-1740.9B REQUIRES THAT HOISTS NOT BE USED FOR SIDE PULLS. | PARA. 101.c.(1)(c) OF NSS/GO-1740.9B REQUIRES THAT SPECIFIC WRITTEN PROCEDURES BE PREPARED AND FOLLOWED FOR CRITICAL LIFTS. | REMOTE | OPEN | REVIEW CRITICAL LIFT PROCEDURES |
| | | | | PARA. 406 REQUIRES THAT OPERATORS BE CERTIFIED TO PERFORM CRITICAL LIFTS AND BE TRAINED IN THE SPECIFIC HAZARDS AND SPECIAL PROCEDURES ASSOCIATED WITH THE LIFT. | AN LDE OPERATOR TRAINING, EXAMINATION, AND LICENSING PROGRAM IS IN PLACE, IN ACCORDANCE WITH NSS/GO-1740.9B, PARA. 405.a. | | CLOSED | VERIFY CRITICAL LIFT OPERATOR CERTIFICATION |

OPERATING AND SUPPORT HAZARD ANALYSIS (O&SHA) WORKSHEET

SYSTEM: BUILDING M-20 CATEGORY: CRITICAL APPLICATION PHASE: LIFTING OPERATION DATE: SEPTEMBER 1996
SUBSYSTEM: ONE AND ONE-HALF TON HAND CHAIN HOIST PREPARED BY: M. CROMPTON
CLOSURE CONCURRENCE: _____ PROJECT MANAGER _____ DEPUTY RECERT MANAGER

| HAZARDOUS CONDITION | HAZARD CAUSE | HAZARD EFFECT | SEVERITY | SAFETY REQUIREMENTS | HAZARD ELIMINATION/ CONTROL PROVISIONS | LIKELIHOOD OF OCCURRENCE | STATUS | VERIFICATION ACTIONS |
|---|---|---|---|---|---|---|---|---|
| H7-IMPROPER OPERATION | SUSPENDED LOAD UNATTENDED | LOSS OF FLIGHT HARDWARE OR EQUIPMENT AND/OR INJURY TO PERSONNEL | CATASTROPHIC | PARA. 406.b.(6) OF NSS/GO-1740.9B REQUIRES THAT PERSONNEL NOT TO WORK UNDER SUSPENDED LOADS, MUST BE MANNED IF LOAD IS ON HOOK. | PARA. 101.c.(1)(c) OF NSS/GO-1740.9B REQUIRES THAT SPECIFIC WRITTEN PROCEDURES BE PREPARED AND FOLLOWED FOR ALL CRITICAL LIFTS. | REMOTE | OPEN | REVIEW CRITICAL LIFT PROCEDURES |
| | | | | | AN LDE OPERATOR TRAINING, EXAMINATION, AND LICENSING PROGRAM IS IN PLACE, IN ACCORDANCE WITH NSS/GO-1740.9B, PARA. 405.a. | REMOTE | OPEN | VERIFY CRITICAL LIFT OPERATOR CERTIFICATION |
| HOIST BRAKES FAIL TO HOLD LOAD | LOAD BRAKE FAILS | LOSS OF FLIGHT HARDWARE OR EQUIPMENT AND/OR INJURY TO PERSONNEL | CATASTROPHIC | MANUALLY OPERATED, OEM TYPE HOISTS ARE ACCEPTABLE PER NSS/GO-1704.9B, PARA. 401.f.(7) | NSS/GO-1740.9B, PARA. 206.a.(1) REQUIRES THAT EMERGENCY PROCEDURES BE DEVELOPED FOR CONTINGENCY ACTIONS OR OTHER EMERGENCIES.<br><br>GSFC REQUIRES APPROVED INSPECTION PROCEDURES FOR LIFTING DEVICES AND EQUIPMENT | REMOVE | OPEN | • FMEA: NSI NO. 40-01-661<br>• REVIEW PROCEDURES<br>• REVIEW CERTIFICATION STATUS<br>• REVIEW EMERGENCY PROCEDURES<br>• REVIEW INSPECTION PROCEDURES |
| IMPROPER HOIST APPLICATION | ADVERSE ENVIRONMENTAL CONDITIONS/ HAZARDOUS LOADS | LOSS OF FLIGHT HARDWARE OR EQUIPMENT AND/OR INJURY TO PERSONNEL | CATASTROPHIC | NSS/GO-1740.9B, PARA. 401.f.(7) REQUIRES THAT MANUALLY OPERATED, OEM TYPE HOIST SHALL COMPLY WITH ANSI REQUIREMENTS.<br><br>OEM REQUIRES FAILSAFE, REDUNDANT SUPPORTING DEVICES WHICH ARE NOT INCORPORATED INTO THIS HOIST. | AN LDE OPERATOR TRAINING, EXAMINATION, AND LICENSING PROGRAM IS IN PLACE, IN ACCORDANCE WITH NSS/GO-1740.9B, PARA. 405.a. | REMOTE | OPEN | • VERIFY CRITICAL LIFT OPERATOR CERTIFICATION<br>• FMEA: NSI NO. 40-01-661 |
| PROBLEMS RESULTANT FROM REPAIRS, MODS, OR ALTERATIONS MADE BY PERSONS OTHER THAN FACTORY OR OEM AUTHORIZED PERSONNEL | IMPROPER ALTERATIONS, MODS, OR REPAIRS | LOSS OF FLIGHT HARDWARE OR EQUIPMENT AND/OR INJURY TO PERSONNEL | CATASTROPHIC | QUALIFIED AND AUTHORIZED PERSONNEL TO PERFORM REPAIR, MODIFICATION, OR ALTERATION | • VERIFY MAINTENANCE PERSONNEL QUALIFICATIONS<br>• DAILY INSPECTION<br>• FREQUENT AND PERIODIC INSPECTION | REMOTE | OPEN | • VERIFY CERTIFICATION STATUS<br>• FMEA: NSI NO. 40-01-661<br>• REVIEW PROCEDURES<br>• REVIEW MAINTENANCE RECORDS<br>• VERIFY MAINTENANCE PERSONNEL QUALIFICATIONS |

OPERATING AND SUPPORT HAZARD ANALYSIS (O&SHA) WORKSHEET

SYSTEM: BUILDING M-20 CATEGORY: CRITICAL APPLICATION PHASE: LIFTING OPERATION DATE: SEPTEMBER 1996
SUBSYSTEM: ONE AND ONE-HALF TON HAND CHAIN HOIST PREPARED BY: M. CROMPTON
CLOSURE CONCURRENCE: _____ PROJECT MANAGER _____ DEPUTY RECERT MANAGER

| HAZARDOUS CONDITION | HAZARD CAUSE | HAZARD EFFECT | SEVERITY | SAFETY REQUIREMENTS | HAZARD ELIMINATION/ CONTROL PROVISIONS | LIKELIHOOD OF OCCURRENCE | STATUS | VERIFICATION ACTIONS |
|---|---|---|---|---|---|---|---|---|
| HOIST OPERATED WITH OTHER THAN MANUAL POWER FURNISHED BY ONE PERSON | LACK OF OPERATOR TRAINING | LOSS OF FLIGHT HARDWARE OR EQUIPMENT AND/OR INJURY TO PERSONNEL | CATASTROPHIC | PARA. 406 REQUIRES THAT OPERATORS BE CERTIFIED | AN LDE OPERATOR TRAINING, EXAMINATION, AND LICENSING PROGRAM IS IN PLACE, IN ACCORDANCE WITH NSS/GO-1740.9B, PARA. 405.a. | REMOTE | OPEN | VERIFY CRITICAL LIFT OPERATOR CERTIFICATION |
| LOSS OF LOAD SUPPORT | SLINGS/RIGGING HAVE INSUFFICIENT CAPACITY | LOSS OF FLIGHT HARDWARE OR EQUIPMENT AND/OR INJURY TO PERSONNEL | CATASTROPHIC | PARA. 406 REQUIRES THAT OPERATORS BE CERTIFIED TO PERFORM CRITICAL LIFTS AND BE TRAINED IN THE SPECIFIC HAZARDS AND SPECIAL PROCEDURES ASSOCIATED WITH THE LIFT. | AN LDE OPERATOR TRAINING, EXAMINATION, AND LICENSING PROGRAM IS IN PLACE, IN ACCORDANCE WITH NSS/GO-1740.9B, PARA. 405.a. | REMOTE | OPEN | VERIFY CRITICAL LIFT OPERATOR CERTIFICATION |
| LOSS OF LOAD SUPPORT | PASSIVE COMPONENT FAILURE | LOSS OF FLIGHT HARDWARE OR EQUIPMENT AND/OR INJURY TO PERSONNEL | CATASTROPHIC | NSS/GO-1740.9B, PARA. 405.a REQUIRES THAT DAILY, FREQUENT, AND PERIODIC INSPECTIONS BE PERFORMED ON ALL HOISTS IN ACTIVE SERVICE.<br><br>DESIGN PER CMAA REQUIREMENTS | GSFC REQUIRES APPROVED INSPECTION PROCEDURES FOR LIFTING DEVICES AND EQUIPMENT | REMOTE | OPEN | • INSPECTION PROCEDURES, DOCUMENT NO. _____<br>• LDE CERTIFICATION STATUS |

## SECTION 7 - CONTROL LOGIC ANALYSIS

There are no control/monitor functions associated with this lifting system. No control logic analysis was, therefore, performed.

## SYSTEM 8 - EMERGENCY SAFING ANALYSIS

This system is not controlled by a computer control system. No emergency safing analysis is, therefore, required.

## SECTION 9 - SNEAK CIRCUIT ANALYSIS

The methodology for the control of sneak circuits is not implemented in the design of this lifting system. No sneak circuit analysis is, therefore, performed.

## SECTION 10 - RISK ASSESSMENT

Risk assessment was performed in accordance with RECERT-42-011. The overall risk assessment is evaluated as follows:

Hazard Severity Level: Catastrophic
Likelihood: Remote
Risk: Acceptable (Uncertainties Controlled/Managed, i.e., closure of all Verification Actions items as indicated in the O&SHA). See Figure 6.

# GSFC RECERTIFICATION
# HAZARD SEVERITY LEVELS VERSUS LIKELIHOOD OF OCCURRENCE FOR RISK ASSESSMENT*

| | | HAZARD* SEVERITY LEVELS | | |
|---|---|---|---|---|
| | | MARGINAL (COULD RESULT IN MINOR INJURY OR MINOR FLIGHT HARDWARE DAMAGE) | CRITICAL (COULD RESULT IN SERIOUS INJURY OR SIGNIFICANT FLIGHT HARDWARE DAMAGE) | CATASTROPHIC (COULD RESULT IN FATALITY OR LOSS OF FLIGHT HARDWARE) |
| LIKELIHOOD | *PROBABLE (EXPECTED TO HAPPEN)* | UNACCEPTABLE RISK (UNCERTAINTIES EXIST) | UNACCEPTABLE RISK (UNCERTAINTIES EXIST) | UNACCEPTABLE RISK (UNCERTAINTIES EXIST) |
| | *OCCASIONAL (COULD HAPPEN)* | ACCEPTABLE RISK (MINOR UNCERTAINTIES EXIST) | UNACCEPTABLE RISK (MINOR UNCERTAINTIES EXIST) | UNACCEPTABLE RISK (MINOR UNCERTAINTIES EXIST) |
| | *REMOTE (NOT EXPECTED TO HAPPEN)* | ACCEPTABLE RISK (UNCERTAINTIES CONTROLLED/ MANAGED) | ACCEPTABLE RISK (UNCERTAINTIES CONTROLLED/ MANAGED) | ACCEPTABLE RISK (UNCERTAINTIES CONTROLLED/ MANAGED) |

* THIS GSFC RECERT RISK ASSESSMENT MATRIX IS A MODIFIED VERSION OF FIGURE G-1, APPENDIX G, IN NHB 1700.1(V1-B), "NASA SAFETY POLICY AND REQUIREMENTS DOCUMENT," JUNE 1993.

Figure 6

## SECTION 11 - RECOMMENDATIONS

Complete Verification Documentation including the following major items:

11.1 Implement the Verification Actions listed on the O&SHA Worksheets. Verification Actions must be brought to closure/validation by the Project Office to mitigate the noted hazardous conditions. Lack of closure/validation of the verification actions would void the overall risk assessment.

11.2 Finalize the structural analysis to qualify the roof and trolley support structure. Post warning sign(s) requiring the operator to ascertain that the weather condition is suitable for planned lifting operations since the roof structure supporting the hoist was qualified with no snow load and winds ≤ 60 mph. Include the pertinent Document No. in the "Verification Actions" column for the Hazardous Condition addressed.

11.3 Update the RECERT test and inspection procedures to include specific details to detect the failure mode and causes identified in the FMEA and O&SHA. Include the pertinent Document No. in the "Verification Actions" column for the Hazardous Condition addressed.

11.4 Update the critical lift operator training to include the specific hazards and special procedures identified in the FMEA and O&SHA Worksheets. Identify and emphasize the corrective actions required to mitigate the effects of failure once it has occurred.

11.5 Periodic test, inspection, and maintenance of the hoist is a mandatory requirement of NSS/GO-1740.9B. Verify that the hoist certification, test, inspection, maintenance, and other operational checks have been performed and are current.

11.6 Track corrective actions.

11.7 Maintain deficiency status current herein and document closure date. Document corrective action(s) and provide as an attachment to maintain this analysis current.

11.8 Similarly, update this analysis to include pertinent facility improvements which affect this lifting system.

11.9 Perform an analysis of the facility environment-human relationship that could cause potential sources of danger. Combine this analysis with the O&SHA, herein, to develop the Systems Hazard Analysis (SHA).