MANTECH NSI

****
* NSI
*
*Document # 40-01-690
****

FAILURE MODES AND EFFECTS ANALYSIS OF THE DUFF NORTON FOUR TON COFFING HOIST MODEL NUMBER EC-8012

NSI Document No.

40-01-690

February 1999

PREPARED BY: Mel Crompton 2-25-99
M. Crompton, Project Engineer, Recertification Support, NSI — Date

APPROVED BY: A. G. Zorn 2/25/99
A. Zorn, Manager, Recertification Support, NSI — Date

APPROVED BY: 2/25/99
S. Chan, RECERT Manager, Code 540, NASA/GSFC — Date

RECERT Support
NSI Technology Services Corporation
A Subsidiary of ManTech International Corporation
Goddard Space Flight Center
Greenbelt, Maryland 20771

TABLE OF CONTENTS

Page

LIST OF FIGURES iii

LIST OF ABBREVIATIONS AND ACRONYMS iv

SECTION 1 - SUMMARY OF FINDINGS 1

1.1 System Criticality 1

1.2 Mechanical Critical Items 1

1.3 Electrical Critical Items 1

1.4 Critical Flex Hose 1

1.5 Critical Orifices 1

1.6 Critical Filters 1

1.7 Criticality Category 1R Items 2

1.8 Requirements of NSS/GO-1740.9B 2

1.9 Critical Control/Monitor Functions 2

1.10 Sneak Circuits Identified 2

1.11 Recommendations 2

SECTION 2 - SYSTEM SUMMARY 2

2.1 Documentation List 2

2.2 System Description 3
2.2.1 Hoist System 3
2.2.2 Hoist Control Pendant 4

SECTION 3 - DEFINITIONS AND GROUND RULES 4

3.1 Definitions 4

3.2 Ground Rules 7

SECTION 4 - CRITICALITY ASSESSMENT 8

4.1 Purpose 8

4.2 Criticality Assessment Worksheet 8

SECTION 5 - FAILURE MODES AND EFFECTS ANALYSIS AND CIL . . . 10

5.1 Mechanical FMEA Worksheets and Block Diagrams 10

5.2 Electrical Schematic and FMEA Worksheets 17

5.3 Flex Hose FMEA Worksheets 23

5.4 Orifice FMEA Worksheets 23

5.5 Filter FMEA Worksheets 23

5.6 Requirements of NSS/GO-1740.9B 23

5.7 Critical Items List 23
5.7.1 Critical Item List 23
5.7.2 Critical Item Acceptance Rationale Sheets . . 23

5.8 Risk Assessment 26

SECTION 6 - CONTROL LOGIC ANALYSIS 28

SECTION 7 - EMERGENCY SAFING ANALYSIS 28

SECTION 8 - SNEAK CIRCUIT ANALYSIS 28

SECTION 9 - RECOMMENDATIONS 28

LIST OF FIGURES

Figure	Title	Page
1	General Arrangement Print	11
2	Duff-Norton Co. Wiring Diagram	12
3	Hoist Transmission	13
4	Risk Assessment Matrix	27

LIST OF ABBREVIATIONS AND ACRONYMS

AGMA	American Gear Manufacturers Association
CAT	Category
CIL	Critical Items List
CMAA	Crane Manufacturers Association of America, Inc.
F/H	Flight Hardware
FMEA	Failure Modes and Effects Analysis
GSE	Ground Support Equipment
HMI	Hoist Manufacturing Institute
NASA	National Aeronautics and Space Administration
NFPA	No. 70, National Electric Code
NHB	NASA Handbook
NSTS	National Space Transportation System
OEM	Original Equipment Manufacturer
O&SHA	Operating and Support Hazard Analysis
REV.	Revision
SAA	System Assurance Analysis
SFP	Single Failure Point
SHA	System Hazard Analysis

SECTION 1 - SUMMARY OF FINDINGS

1.1 System Criticality

The Duff-Norton four-ton Coffing hoist located in Building 15 High Bay, is assessed as critical due to its direct interface with flight hardware (F/H).

1.2 Mechanical Critical Items

There is one Category 2 mechanical Critical Item identified in Section 5 of this analysis. This item is summarized below. See Sections 5.1, 5.7, and 5.8 for additional information. Section 3 defines the criticality categories.

Part Name	Critical Failure Mode	Criticality Category
Hoist Transmission	Transmission disengages due to structural failure, i.e., broken gear teeth	2

NOTE:

Gear boxes, speed reducers, and couplings are considered Single Failure Points if they are located between the load sheave and the nearest brake, in accordance with NSTS 22206, Revision D. Rationale for acceptance of the critical item is provided in Section 5.7.2. Analysis determined the following risk acceptance parameters:

Hazard Severity Level --- Catastrophic
Likelihood ---------- Remote
Risk Assessment --------- Acceptable Risk (Uncertainties Controlled/Managed)

1.3 Electrical Critical Items

There are no Critical electrical items associated with the four-ton Coffing hoist.

1.4 Critical Flex Hose

There are no flex hoses associated with this equipment.

1.5 Critical Orifices

There are no orifices associated with this equipment.

1.6 Critical Filters

There are no filters associated with this equipment.

1.7 Criticality Category 1R Items

There were no Criticality IR items identified in the critical output functions in Section 4.

1.8 Requirements of NSS/GO-1740.9B

NSTS 22206, Revision D, requires that noncompliance to the requirements of NSS/GO-1740.9B, "NASA Safety Standard for Lifting Devices and Equipment," be identified in the FMEA. This FMEA concluded that the Duff-Norton four-ton Coffing hoist is in compliance with the requirements of NSS/GO-1740.9B.

1.9 Critical Control/Monitor Functions

There are no control/monitor functions associated with this equipment.

1.10 Sneak Circuits Identified

There was no Sneak Circuit Analysis performed for this system since a single control system is in place, i.e., the hoisting system.

1.11 Recommendations

Recommendations resultant from the performance of the FMEA and the O&SHA relate to the following areas:

- Test and Inspection
- Operations
- Procedures
- LDE Critical Lift Operator training
- Analysis update, and
- Analysis integration with the SHA

A summary of these recommendations is provided in Section 9.

SECTION 2 - SYSTEM SUMMARY

2.1 Documentation List

The following documents were used in completing this analysis:

Document	Rev.	Title
NSS/GO-1740.9	B	NASA Safety Standard for Lifting Devices and Equipment
NSTS 22206	D	Requirements for Preparation and Approval of Failure Modes and Effects Analysis (FMEA) and Critical Items List (CIL)

Document	Rev.	Title
Publication Part No. EC3-680-2		Duff-Norton/Coffing Hoists Operating and Maintenance Instructions with parts lists
NHB 1700.1(V1-B)		NASA Safety Policy and Requirements Document
RECERT-42-011		A Standard Operating Procedure for Preparation of a Request for a Waiver/Deviation to the Mandatory Requirements of NSS/GO-1740.9B, "NASA Safety Standard for Lifting Devices and Equipment"
NSI Procedure No. 44-06-444, October 1995		Test and Inspection Procedure for Hoist,
NSI Report No. 44-06-444 October 1995		Appendix I, Periodic Test and Inspection Report for Hoist,

2.2 System Description

The Duff-Norton four-ton capacity Coffing electric chain hoist is located in Building 15 High Bay at NASA/GSFC. The lifting system consists of the replacement four-ton hoist mounted on an 8" double channel spreader attached to the bridge of Crane 15-2. (The original P&H hoist has been disabled due to questionable reliability pertaining to the "redundant" brake.) The system, so modified, supports the hoist and allows lifting and positioning of Critical flight hardware in the Modal Survey Facility. Basic electric chain hoist data is listed below.

Electric chain hoist with safety hook suspension

Model number: EC-8012
Capacity in tons: 4
Lift in feet: 50
Net Wt. (lbs.): 700
Lift speed (FPM): 12
Voltage: 230/460-3
Motor HP: 3

2.2.1 Hoist System

The hoist system is equipped with a 230-volt, 3ø 60 Hertz motor, which meets or exceeds HMI duty cycle rating for heavy duty service (H4). The hoist lift speed is 12 feet/minute. Two means of braking are provided: regenerative braking and a multiple disc electric hoist brake. Overload protection prevents lifting of loads exceeding the rated load. Each method of braking is

capable of bringing a rated load to zero speed and holding it, with or without power.

The hoist is equipped with two upper limit switches, a geared upper limit switch, and a whisker final upper limit switch, wired in accordance with Paragraph 201.g.(9) of NSS/GO-1740.9B.

2.2.2 Hoist Control Pendant

The four-ton hoist is controlled from a hand held pendant control station. The two-button pendant provides for: 1) raising and 2) lowering the load.

SECTION 3 - DEFINITIONS AND GROUND RULES

3.1 Definitions

These definitions are necessary to an understanding of the ground rules contained in this document.

Component - A combination of parts, devices, and structures, usually self contained, which perform a distinctive function in the operation of the overall equipment. A "black box" (e.g., transmitter, power supply, cryogenic pump, filter assembly).

Correcting Action - An identification of actions, automatic or manual, which could be taken to mitigate the effect of failure.

Critical Item - A critical item is defined as any one of the following:

1. A Criticality Category 1, 1S, or 2 are Single Failure Points.
2. A redundant hardware item where the second failure results in loss of life or vehicle and the item is not capable of checkout during normal ground operations (i.e., a single fault tolerant item which fails Redundancy Screen A).

Critical Items List (CIL) - The CIL represents an analysis of the hardware design, highlighting those items which do not meet the requirements of the applicable codes and standards.

Critical System - A system is assessed as critical if loss of overall system function or improper performance of a system function could result in personnel injury or loss of life, damage or loss of flight hardware or facilities.

Criticality - The relative measure of the consequences of a failure mode.

Criticality Categories

Criticality	Potential Effect or Failure
1	Single failure which could result in loss of life or flight hardware.
1R	Two redundant hardware items, which if both failed, could result in loss of life or flight hardware (or loss of a safety or hazard monitoring system).
1S	Single failure in a safety or hazard monitoring system that could cause the system to fail to detect, combat, or operate when needed during the existence of a hazardous condition and could result in loss of life or flight hardware.
2	Single failure which could result in loss (damage) of a flight hardware system or personnel injury.
3	All others.

Criticality Assessment - An analysis of each system function to determine if loss or improper performance of the function could result in loss of life/injury and/or damage to flight hardware or facilities.

Fail Safe - The ability to sustain a failure without causing loss of load or damage to the load. (Includes the capability to safe the lifting device and successfully terminate operations.)

Failure - The inability of a system, subsystem, component, or part to perform its required function within specified limits, under specified conditions for a specified duration.

Failure Mode - A description of the manner in which an item can fail.

Function - The activity or operation that a part, component, or system must perform to accomplish its intended purpose.

Hazard - Existing or potential condition that can result in or contribute to a mishap.

Hazard Report Status -

1. Closed - Corrective action/evaluation has been completed. Requirements have been identified and closed loop control is established. Governing procedural controls are in place. In case of hazards which document design deficiencies, the modification has been completed, the

modified system configuration has been verified, and the certification has been documented.

2. Open - Corrective measurement/procedural hazard controls are not in place, or evaluation is pending.

Interface - The point or area where a relationship exists between two or more parts, systems, programs, persons, or procedures wherein physical and/or functional compatibility is required.

Loss of Lifting Device - Loss of the capability to provide the level of device performance required for normal or emergency operations.

Passive Component - A component that may be necessary to the performance or structural integrity of the system but has no active function.

Redundancy - Multiple ways of performing a function.

1. Operational Redundancy - Redundant elements, all of which are fully energized during the subsystem operating cycle. Operational redundancy includes load sharing redundancy wherein redundant elements are connected in such a manner that, upon failure of one unit, the remaining redundant elements will continue to perform the subsystem function. Switching out the failed element is not required.

2. Standby Redundancy - Redundant hardware items that are nonoperative until they are switched into the subsystem upon failure of the primary items. Switching can be accomplished by either automatic or manual means.

3. Like Redundancy - Identical hardware items performing the same function.

4. Unlike Redundancy - Nonidentical hardware items performing the same function. Safety features which provide protection for specific failure modes are considered as unlike redundancy for that failure mode; i.e., relief valves which provide protection against overpressurization after failure of a regulator.

Safety or Hazard Monitoring System - A system whose function is to detect or combat a hazardous situation which has occurred because of prior failures or events during hazardous operations.

Single Failure Point (SFP) - A single item of hardware, the failure of which could result in loss of life or damage to a flight hardware system.

Variance - Documented and approved permission to perform some act contrary to established requirements.

<u>Waiver</u> - A variance that authorizes departure from a particular safety requirement, where an increased level of risk has been accepted.

3.2 Ground Rules

The analysis shall assess all active components between the load hook and the nearest brake since failure of these components could result in dropping the load. The following ground rules shall be used:

3.2.1 If the hoist has only one brake, the brake shall be identified as a Single Failure Point and the criticality shall be assigned based on the worst-case effect of its failure. An eddy current brake shall not be considered capable of holding the load. See Paragraph 5.6.1 reference: manually operated (nonpowered), off-the-shelf OEM type hoists.

3.2.2 For shafts located between the drum and brake, the method of shaft attachment shall be analyzed. If the shaft is welded or physically attached to the drum by a method approved by hoisting standards, then the shaft attach points shall be considered passive.

3.2.3 Bearings on drums and shafts shall be analyzed only to determine if the bearings can fail and drop the load.

3.2.4 Gear boxes, speed reducers, and couplings shall be considered Single Failure Points if they are located between the drum and nearest brake.

3.2.5 Redundant items with control circuitry must be analyzed to determine if a single credible failure can affect the controls for both redundant components.

3.2.6 A single limit switch on the trolley or bridge drive shall not be identified as a SFP if there is also an acceptable mechanical stop.

3.2.7 Non-compliance to the requirements of NSS/GO-1740.9, "NASA Safety Standard for Lifting Devices and Equipment," shall be identified in the FMEA.

3.2.8 Passive components will not be analyzed in the FMEA. The current list of passive components includes the hook, load block, wire rope, sheaves, and rope drum. However, the drum shafts shall be analyzed as to the attachment method.

3.2.9 Document worst case failure effects for every identified failure mode.

SECTION 4 - CRITICALITY ASSESSMENT

4.1 Purpose

The purpose of a lifting system criticality assessment is to assess each subsystem function to determine if loss or improper performance of the function could result in loss of life and/or load or damage to the lifting system. The assessment is performed without regard to redundancy. System functions are identified as either critical or noncritical.

4.2 Criticality Assessment Worksheet

The Duff-Norton four-ton Coffing hoist subsystem is assessed on the following Criticality Assessment Summary Sheet.

SYSTEM CRITICALITY ASSESSMENT SUMMARY WORKSHEET

LIFT SYSTEM: DUFF-NORTON FOUR-TON COFFING HOIST **LOCATION:** BUILDING 15

PREPARED BY: M. CROMPTON **DATE:** FEBRUARY 1999

SUBSYSTEM	FUNCTION	TIME PERIOD	EFFECT OF LOSS/FAILURE	CRITICALITY CATEGORY	NOTE
ELECTRICAL POWER, - 230 VOLTS - 3 PHASE - 60 HERTZ	SUPPLIES POWER TO OPERATE MOTOR AND BRAKE FOR HOIST SYSTEM	PRELAUNCH PROCESSING	ALL HOIST MOTION WOULD STOP, ALL HOIST SYSTEM BRAKES WOULD ENGAGE AND HOLD LOAD. DELAY IN PROCESSING OPERATIONS.	C	
CONTROLS UP/DOWN (HOIST)	OPERATES HOIST IN SPECIFIED DIRECTION	PRE/POST MODAL SURVEY	UNABLE TO RAISE/ LOWER LOAD AS REQUIRED. POSSIBLE DAMAGE TO FLIGHT HARDWARE DUE TO IMPROPER FUNCTION. DELAY IN PROCESSING OPERATIONS.	C	
OUTPUT HOIST MOTION (UP/DOWN)	RAISE/LOWER LOAD		A CATASTROPHIC FAILURE OF THE HOIST SYSTEM COULD CAUSE DAMAGE TO FLIGHT HARDWARE.	C	REQUIRES MULTIPLE FAILURES.

C = Critical
NC = Not Critical

SECTION 5 - FAILURE MODES AND EFFECTS ANALYSIS AND CIL

5.1 Mechanical FMEA Worksheets and Block Diagrams

The mechanical components of the subsystems documented in Section 4 were identified from the documents and diagrams referenced in the Documentation List. An analysis of these components was performed and documented on the following FMEA worksheets. A current list of passive components follows:

<u>Passive Components</u>

- Hook
- Load Block
- Wire Rope
- Sheaves
- Drum
- Structural components are not analyzed as part of this analysis. Such items that constitute a safety concern shall be considered in the Operating and Support Hazard Analysis.

Shafts, bearings, gear boxes, and couplings are analyzed in accordance with the Ground Rules defined in Section 3.2. Figures 4 through 6 are included herein to support this latter analysis.

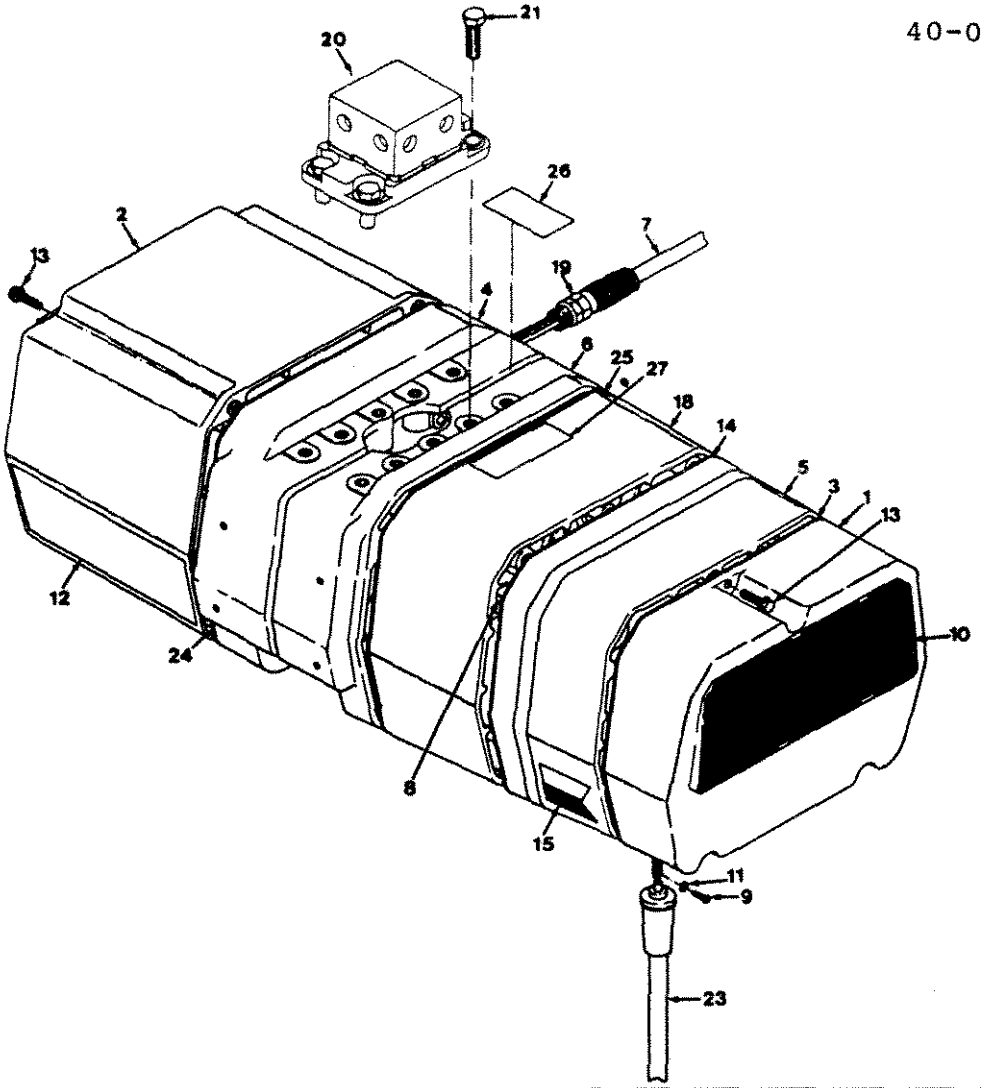

Index No.	Part No.	Part Name
1	36J4	Brake Cover
2	36J3	Control Cover
3	560J2	Gasket. Brake Cover
4		Sheave Housing. Motor Side
	33J13	1, (2, 3, & 4 ton)
	33J11	(5 ton)
5	34J2	Transmission Cover
6		Sheave Housing, Transmission Side
	37J6	(1, 2, 3, & 4 ton)
	37J5	(5 ton)
7	H-6003	Power Cord
8	940J4	Wiring Harness (Single Speed)
	940J4-9	Wiring Harness (Two Speed)
9	H-2981-P	Screw
10	675J3B	Decal, Capacity (1 Ton)
	675J5	Decal, Capacity (2 Ton)
	675J6	Decal, Capacity (3 Ton)
	675J7	Decal, Capacity (4 Ton)
	675J8	Decal, Capacity (5 Ton)
11	H-4002-P	Plain Washer
12	677J2	Decal, Coffing
13	H-2987-P	Screw

Index No.	Part No.	Part Name
14	560J6	Gasket, Transmission Cover
15	676J2B	Decal, Coffing Hoists
16	679J2	Decal, Power Requirements (230/460V)
	679J3	Decal, Power Requirements (230V)
	679J4	Decal, Power Requirements (460V)
	679J5	Decal, Power Requirements (575V)
	679J6	Decal, Power Requirements (208V)
18	35J3	Transmission Housing
19	H-7961	Cord Grip
20		Suspension Assembly Kit (Reference—See figure 8-2)
21		Screw (Included in all suspension assy.) (Reference—See figure 8-2)
23		Push Button Cable (Reference—See figures 8-10A and 8-10B)
24	560J3	Gasket. Control Cover
25	560K15	Gasket, Transmission Adapter
26	687J1	Decal
27	687K9	Decal (Used with 3⁵/₈" suspension adapters)
	687K10	Decal (Used with 7" suspension adapters)

FIGURE 1
DUFF-NORTON FOUR-TON COFFING HOIST
GENERAL ARRANGEMENT

WIRING

Safety Notes

Disconnect power from hoist before removing end covers.

7-1. Voltage Conversion

Standard single speed units are convertible from 460 to 230 volts. Conversion to the alternate voltage can be accomplished with the following procedure.

a. Be sure power is disconnected from hoist. Remove long end cover.

b. To convert the hoist from 460 to 230 volts, reconnect leads T4, T5, T6, T7, T8, T9, H2, H3, S1, and S2 per the 230 volt connection diagram on Wiring Diagram, Figure 7-1.

CAUTION

Do not move any wires or make any changes to the wiring except at the gray terminal block.

c. After converting voltage, check for proper phasing of three phase units and check for proper limit switch operation.

7-2. Wiring Diagrams

The wiring diagrams for standard hoist models are reproduced on the following pages. In addition, every hoist should have a wiring diagram located inside the long end cover.

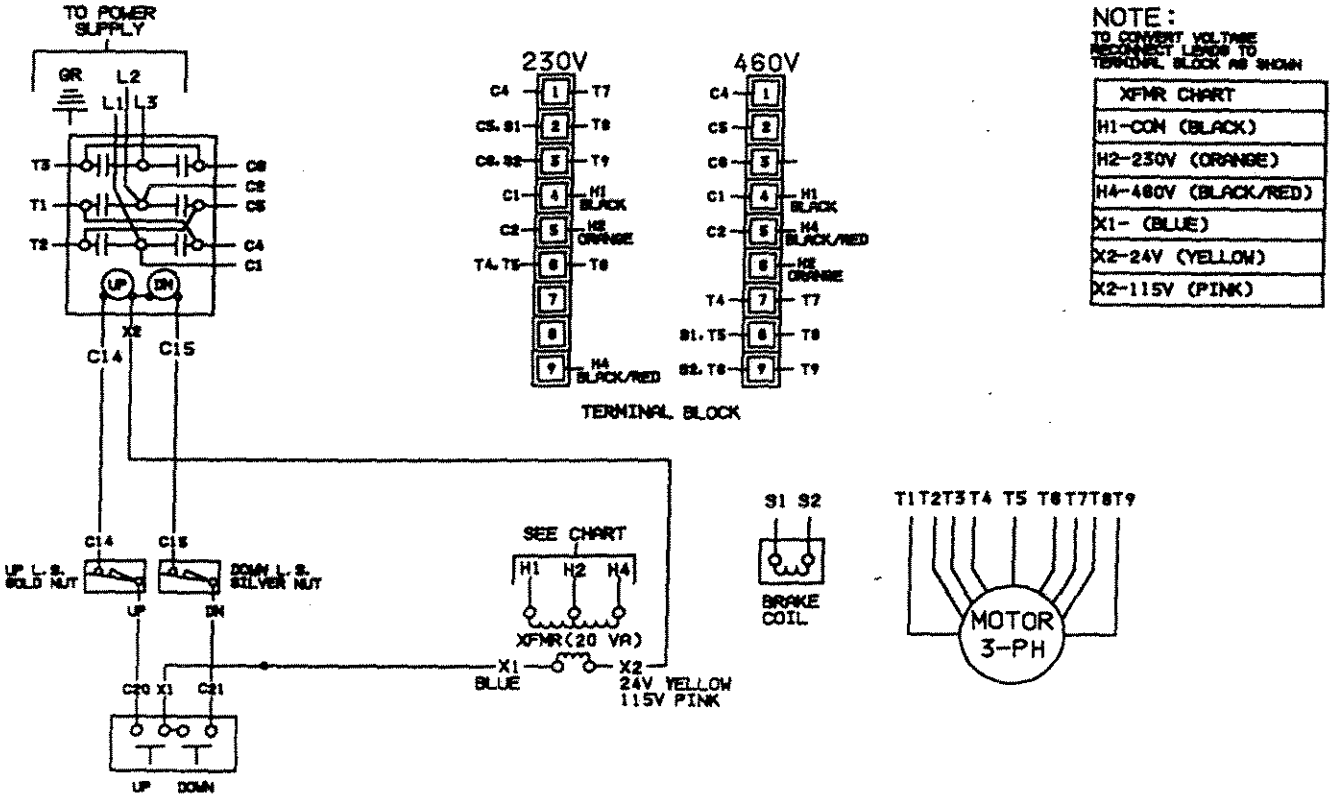

WIRING DIAGRAM
230/460V, 3 Phase, Single Speed Hoist

FIGURE 2 - DUFF-NORTON CO. WIRING DIAGRAM

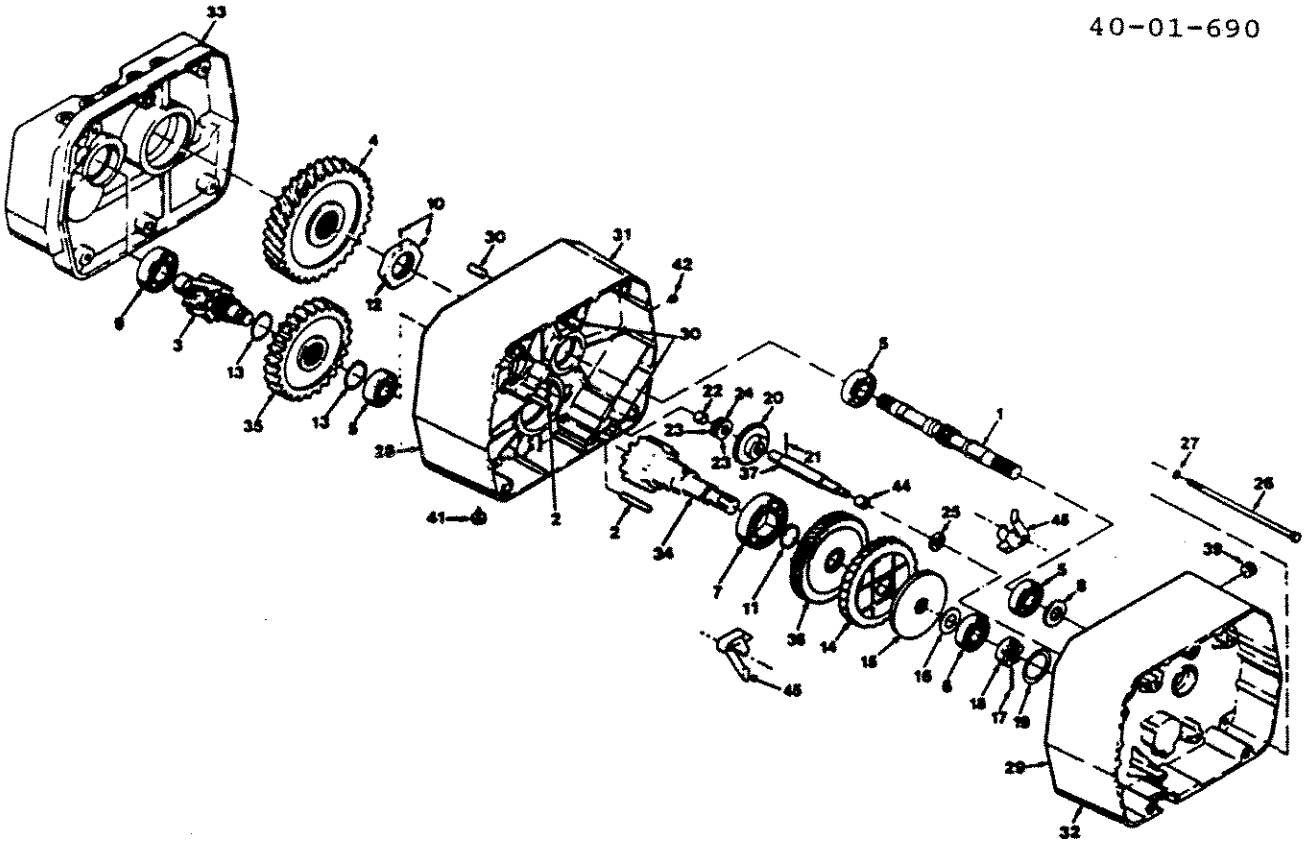

Index No.	Part No.	Part Name
1	400J7	High Speed Pinion
2	H-5493	Dowel Pin
3	404J3	Output Pinion
4	405J1	Output Gear
5	500K13	Bearing
6	500K14	Bearing
7	500K15	Bearing
8	561K18	Seal
9	500K35	Bearing
10	H-2597	Setscrew
11	H-5539	Retaining Ring
12	130J7	Lock Nut
13	H-5540	Retaining Ring
14	7JG16-1	Ratchet Assembly
15	SJ9	Pressure Plate
16	255K11	Thrust Washer
17	H-5219	Driv-Lok Pin
18	130J8	Lock Nut (Load Brake)
19	H-7834	Spring Washer
20	428J1	Limit Switch Gear
21	H-5232	Spring Pin
22	530J24	Bushing
23	255JI9	Thrust Washer
24	511J17	Thrust Bearing
25	561K17	Seal
26	H-2333	Bolt
27	H4157	Lock Washer
28	560K15	Transmission Adapter Gasket (Reference—See figure 8-1)
29	560J6	Transmission Cover Gasket (Reference—See figure 8-1)
30	H-5387	Dowel Pin

Index No.	Part No.	Part Name
31		Transmission Housing (Reference—See figure 8-1)
32		Transmission Cover (Reference—See figure 8-1)
33		Sheave Housing, Transmission Side (Reference—See figure 8-1)
34	402J6	Intermediate Pinion (Models EC4024, EC8012 & EC10008)
	402J7	Intermediate Pinion (Models EC4016, EC8008 & EC10005)
	402J8	Intermediate Pinion (Model EC6010)
	402J9	Intermediate Pinion (Models EC2032 & EC6016)
35	403K4	Intermediate Gear (Models EC4016, EC8008 & EC10005)
	403K5	Intermediate Gear (Models EC4024, EC8012 & EC10008)
	403J6	Intermediate Gear (Model EC6010)
	403J7	Intermediate Gear (Models EC2032 & EC6016)
36	591JG12	Load Equalizer Assembly (Models EC4024, EC6016 EC8012 & EC10008)
	591JG13	Load Equalizer Assembly (Models EC2032, EC4016, EC6010, EC8008 & EC10005)
37	140J1	Standard Limit Switch Drive Shaft
39	SK1912-21W	Relief Fitting
41	H-6268	Drain Plug
42	S-25-9	Level Plug
44	530J29	Bushing
45	25JG4-1	Pawl Assembly

FIGURE 3: HOIST TRANSMISSION

FAILURE MODE AND EFFECTS ANALYSIS (FMEA) WORKSHEET

SYSTEM: BUILDING 15 HIGH BAY DATE: FEBRUARY 1999
SUBSYSTEM: DUFF-NORTON FOUR-TON COFFING HOIST, MECHANICAL PREPARED BY: M. CROMPTON

PART NO.	PART NAME	PART FUNCTION	A. FAILURE MODE B. CAUSE C. DETECTION METHOD D. CORRECTING ACTION E. TIME TO EFFECT	FAILURE EFFECT ON SYSTEM PERFORMANCE	FAILURE EFFECT ON CRITICAL HARDWARE AND/OR PERSONNEL SAFETY	CRIT CAT
P/N N.A	HOIST TRANSMISSION	PROVIDES MECHANICAL LINKAGE/ ADVANTAGE BETWEEN THE HOIST MOTOR AND THE LOAD SHEAVE	A1. DISENGAGES B1. BROKEN TEETH C. BINDING AND NOISY OPERATION D. N/A E. IMMEDIATELY	CATASTROPHIC FAILURE OF THE HOIST TRANSMISSION WILL ALLOW THE LOAD TO DROP	LOAD WILL DROP, COULD CAUSE DAMAGE OR LOSS OF FLIGHT HARDWARE	2
			A2. GEARS LOCK UP B2. LACK OF LUBRICATION, EXCESSIVE WEAR	HOIST SYSTEM INOPERATIVE	DELAY FOR REPAIRS	3
	MULTIPLE DISC MOTOR BRAKE	PROVIDES TORQUE FOR STOPPING AND HOLDING LOAD WHEN POWER IS REMOVED	A1. FAILS TO ENGAGE B1. EXCESSIVE WEAR OF FRICTION MATERIAL	NONE, MECHANICAL LOAD BRAKE WILL STOP AND HOLD LOAD, REQUIRES MULTIPLE FAILURES	DELAY FOR REPAIRS	3
			A2. FAILS TO DISENGAGE B2. INTERNAL PARTS FAILURE	HOIST SYSTEM INOPERATIVE	DELAY FOR REPAIRS	3

FAILURE MODE AND EFFECTS ANALYSIS (FMEA) WORKSHEET

SYSTEM: BUILDING 15 HIGH BAY — DATE: FEBRUARY 1999
SUBSYSTEM: DUFF-NORTON FOUR-TON COFFING HOIST, MECHANICAL — PREPARED BY: M. CROMPTON

PART NO.	PART NAME	PART FUNCTION	A. FAILURE MODE B. CAUSE C. DETECTION METHOD D. CORRECTING ACTION E. TIME TO EFFECT	FAILURE EFFECT ON SYSTEM PERFORMANCE	FAILURE EFFECT ON CRITICAL HARDWARE AND/OR PERSONNEL SAFETY	CRIT CAT
P/N N.A	MECHANICAL LOAD BRAKE	PROVIDES REDUNDANT BRAKING ABILITY TO THE HOIST SYSTEM. ALSO AIDS IN CONTROL LOAD DURING LOWERING OPERATIONS	A1. FAILS TO ENGAGE. B1. WORN FRICTION MATERIAL	NONE. MULTIPLE DISC MOTOR BRAKE WILL STOP AND HOLD LOAD. REQUIRES MULTIPLE FAILURES.	DELAY FOR REPAIRS	3
			A2. FAILS TO DISENGAGE. B2. INTERNAL PART FAILURE	POSSIBLE DAMAGE TO MICRO MOTOR.	DELAY FOR REPAIRS.	3
	OVERLOAD LIMITING CLUTCH	PROVIDES PROTECTION AGAINST LIFTING A LOAD GREATER THAN THE FOUR-TON RATED LOAD CAPACITY	A1. FAIL TO ENGAGE B1. INTERNAL PART FAILURE	UNABLE TO LIFT LOAD. HOIST SYSTEM INOPERATIVE.	DELAY FOR REPAIRS.	3
			A2. FAILS TO SLIP B2. INTERNAL PART FAILURE	LOSS OF PROTECTION AGAINST LIFTING LOAD THAT IS PAST HOIST LOAD LIMIT. POSSIBLE DAMAGE TO HOIST IF LOAD IS PAST RATED LIMIT.	DELAY FOR REPAIR.	3

FAILURE MODE AND EFFECTS ANALYSIS (FMEA) WORKSHEET

SYSTEM: BUILDING 15 HIGH BAY
DATE: FEBRUARY 1999
SUBSYSTEM: DUFF-NORTON FOUR-TON COFFING HOIST, MECHANICAL
PREPARED BY: M. CROMPTON

PART NO.	PART NAME	PART FUNCTION	A. FAILURE MODE B. CAUSE C. DETECTION METHOD D. CORRECTING ACTION E. TIME TO EFFECT	FAILURE EFFECT ON SYSTEM PERFORMANCE	FAILURE EFFECT ON CRITICAL HARDWARE AND/OR PERSONNEL SAFETY	CRIT CAT
	COUPLING	PROVIDES MECHANICAL LINKAGE BETWEEN HOIST MAIN MOTOR AND HOIST TRANSMISSION	A1. FAILS STRUCTURALLY B1. OVERSTRESS	HOIST SYSTEM INOPERATIVE. ELECTRO-MECHANICAL BRAKE #1 AND #2 WILL STOP AND HOLD LOAD.	DELAY FOR REPAIRS, REQUIRES MULTIPLE FAILURES.	3

5.2 Electrical Schematic and FMEA Worksheets

The electrical components of the critical output functions, identified in Section 4, were identified from the documents and diagrams referenced in the Documentation List and are analyzed on the following FMEA Worksheets: Subsystem - Hoist, Electrical.

FAILURE MODE AND EFFECTS ANALYSIS (FMEA) WORKSHEET

SYSTEM: BUILDING 15 DATE: FEBRUARY 1999
SUBSYSTEM: DUFF-NORTON FOUR-TON COFFING HOIST, ELECTRICAL PREPARED BY: M. CROMPTON

PART NO.	PART NAME	PART FUNCTION	A. FAILURE MODE B. CAUSE C. DETECTION METHOD D. CORRECTING ACTION E. TIME TO EFFECT	FAILURE EFFECT ON SYSTEM PERFORMANCE	FAILURE EFFECT ON CRITICAL HARDWARE AND/OR PERSONNEL SAFETY	CRIT CAT
	HOIST MOTOR	PROVIDES MOTIVE FORCE TO HOIST SYSTEM REQUIRED TO LIFT/LOWER LOAD.	A1. FAILS TO OPERATE B1. INTERNAL PART FAILURE	HOIST INOPERATIVE. MECHANICAL LOAD BRAKE WILL HOLD THE LOAD.	DELAY FOR REPAIRS REQUIRES MULTIPLE FAILURES	3
			A2. FAILS DURING OPERATION B2. INTERNAL PART FAILURE	HOIST INOPERATIVE. MECHANICAL LOAD BRAKE WILL HOLD THE LOAD.	DELAY FOR REPAIRS REQUIRES MULTIPLE FAILURES	3
UP	CONTACT, N.O.	WHEN ENERGIZED, CONTACT CLOSES PROVIDES CIRCUIT TO ENERGIZE HOIST MOTORS IN THE UP DIRECTION OF TRAVEL.	A1. FAILS CLOSED B1. INTERNAL PART FAILURE	HOIST WILL CONTINUE TO OPERATE AFTER OPERATOR HAS RELEASED CONTROL BUTTON. OPERATOR CAN STOP HOIST BY USING E-STOP/OFF BUTTON ON CRANE 15-2 PENDANT.	DELAY FOR REPAIRS	3
			A2. FAILS OPEN B2. INTERNAL PART FAILURE	HOIST SYSTEM INOPERATIVE IN THE UP DIRECTION OF TRAVEL.	DELAY FOR REPAIRS	3

FAILURE MODE AND EFFECTS ANALYSIS (FMEA) WORKSHEET

SYSTEM: BUILDING 15 DATE: FEBRUARY 1999
SUBSYSTEM: DUFF-NORTON FOUR-TON COFFING HOIST, ELECTRICAL PREPARED BY: M. CROMPTON

PART NO.	PART NAME	PART FUNCTION	A. FAILURE MODE B. CAUSE C. DETECTION METHOD D. CORRECTING ACTION E. TIME TO EFFECT	FAILURE EFFECT ON SYSTEM PERFORMANCE	FAILURE EFFECT ON CRITICAL HARDWARE AND/OR PERSONNEL SAFETY	CRIT CAT
DOWN	CONTACT, N.O.	WHEN ENERGIZED CONTACT CLOSES, PROVIDES CIRCUIT TO ENERGIZE HOIST MOTORS IN THE LOWERING DIRECTION	A1. FAILS CLOSED B1. INTERNAL PARTS FAILURE	HOIST WILL CONTINUE TO OPERATE AFTER OPERATOR HAS RELEASED CONTROL BUTTON. OPERATOR CAN STOP HOIST BY USING E-STOP/OFF BUTTON ON CRANE 15-2 PENDANT.	DELAY FOR REPAIRS	3
			A2. FAILS OPEN B2. INTERNAL PARTS FAILURE	HOIST INOPERATIVE IN LOWERING DIRECTION OF TRAVEL.	DELAY FOR REPAIRS.	3
	LOWER LIMIT SWITCH	PROVIDES HOIST WITH OVERTRAVEL. PROTECTION IN THE DOWN DIRECTION OF TRAVEL. LIMIT SWITCH IS INTENDED TO PREVENT HOOK FROM CONTACTING THE GROUND.	A1. FAILS CLOSED B1. INTERNAL PARTS FAILURE	LOSS OF OVERTRAVEL PROTECTION IN THE DOWN DIRECTION OF TRAVEL. OPERATOR CAN STOP HOIST USING THE E-STOP BUTTON OR THE "OFF" BUTTON ON CRANE 15-2 PENDANT OR RELEASING THE "DOWN" BUTTON ON THE HOIST PENDANT.	DELAY FOR REPAIRS. REQUIRES MULTIPLE FAILURES.	3

FAILURE MODE AND EFFECTS ANALYSIS (FMEA) WORKSHEET

SYSTEM: BUILDING 15 DATE: FEBRUARY 1999
SUBSYSTEM: DUFF-NORTON FOUR-TON COFFING HOIST, ELECTRICAL PREPARED BY: M. CROMPTON

PART NO.	PART NAME	PART FUNCTION	A. FAILURE MODE B. CAUSE C. DETECTION METHOD D. CORRECTING ACTION E. TIME TO EFFECT	FAILURE EFFECT ON SYSTEM PERFORMANCE	FAILURE EFFECT ON CRITICAL HARDWARE AND/OR PERSONNEL SAFETY	CRIT CAT
			A2. FAILS OPEN B2. INTERNAL PARTS FAILURE	HOIST INOPERATIVE IN THE DOWN DIRECTION OF TRAVEL.	DELAY FOR REPAIRS.	3
	INITIAL UPPER LIMIT SWITCH	PROVIDES HOIST WITH OVERTRAVEL PROTECTION IN THE UP DIRECTION OF TRAVEL.	A1. FAILS CLOSED B1. INTERNAL PARTS FAILURE	LOSS OF PRIMARY OVERTRAVEL PROTECTION. HOIST IS PROTECTED BY A FINAL UPPER LIMIT SWITCH WHICH WILL OPEN MAIN LINE CONTACTS AND CUT OFF ALL POWER TO THE HOIST.	DELAY FOR REPAIRS. REQUIRES MULTIPLE FAILURES.	3
			A1. FAILS OPEN B2. INTERNAL PARTS FAILURE	HOIST INOPERATIVE IN THE UP DIRECTION OF TRAVEL.	DELAY FOR REPAIRS. REQUIRES MULTIPLE FAILURES.	3
UPPER WHISKER LIMIT SWITCH	FINAL UPPER LIMIT SWITCH	PROVIDES FINAL UPPER OVERTRAVEL PROTECTION BY OPENING MAIN LINE CIRCUIT BREAKER WHEN OPENED.	A1. FAILS CLOSED B1. INTERNAL PARTS FAILURE	LOSS OF FINAL OVERTRAVEL PROTECTION. HOIST IS PROTECTED BY PRIMARY GEAR DRIVEN LIMIT SWITCH AND E-STOP/OFF BUTTON.	DELAY FOR REPAIRS.	3

FAILURE MODE AND EFFECTS ANALYSIS (FMEA) WORKSHEET

SYSTEM: BUILDING 15 DATE: FEBRUARY 1999
SUBSYSTEM: DUFF-NORTON FOUR-TON COFFING HOIST, ELECTRICAL PREPARED BY: M. CROMPTON

PART NO.	PART NAME	PART FUNCTION	A. FAILURE MODE B. CAUSE C. DETECTION METHOD D. CORRECTING ACTION E. TIME TO EFFECT	FAILURE EFFECT ON SYSTEM PERFORMANCE	FAILURE EFFECT ON CRITICAL HARDWARE AND/OR PERSONNEL SAFETY	CRIT CAT
			A2. FAILS OPEN B2. INTERNAL PARTS FAILURE	HOIST SYSTEM INOPERATIVE.	DELAY FOR REPAIRS.	3
MOTOR BRAKE SOLENOID	COIL	PROVIDES ABILITY TO DISENGAGE HOIST MOTOR BRAKE.	A1. FAILS OPEN B1. DEFECTIVE WINDINGS	MECHANICAL LOAD BRAKE WILL REMAIN ENGAGED. HOIST SYSTEM INOPERATIVE.	DELAY FOR REPAIRS.	3
	COIL	PROVIDES ABILITY TO ENERGIZE AND CLOSE MAIN LINE CONTACTS WHICH ENABLES HOIST TO BE ENERGIZED.	A1. FAILS OPEN B1. DEFECTIVE WINDINGS	UNABLE TO ENERGIZE HOIST SYSTEM.	DELAY FOR REPAIRS.	3
	CONTACTS, N.O.	WHEN CLOSED, ALLOWS HOIST SYSTEM TO BE ENERGIZED.	A1. FAILS OPEN B1. INTERNAL PART FAILURE	UNABLE TO ENERGIZE HOIST SYSTEM. HOIST SYSTEM INOPERATIVE.	DELAY FOR REPAIRS.	3
			A2. FAILS CLOSED B2. INTERNAL PARTS FAILURE	UNABLE TO DE-ENERGIZE HOIST SYSTEM. REQUIRE MULTIPLE FAILURES.	DELAY FOR REPAIRS.	3

FAILURE MODE AND EFFECTS ANALYSIS (FMEA) WORKSHEET

SYSTEM: BUILDING 15 DATE: FEBRUARY 1999
SUBSYSTEM: DUFF-NORTON FOUR-TON COFFING HOIST, ELECTRICAL PREPARED BY: M. CROMPTON

PART NO.	PART NAME	PART FUNCTION	A. FAILURE MODE B. CAUSE C. DETECTION METHOD D. CORRECTING ACTION E. TIME TO EFFECT	FAILURE EFFECT ON SYSTEM PERFORMANCE	FAILURE EFFECT ON CRITICAL HARDWARE AND/OR PERSONNEL SAFETY	CRIT CAT
XFMER	TRANSFORMER	PROVIDES CONTROL PENDANT WITH REQUIRED 120 VAC OPERATING VOLTAGE.	A1. FAILS OPEN B1. DEFECTIVE WINDINGS	UNABLE TO ISSUE COMMANDS TO HOIST SYSTEM FROM THE CONTROL PENDANT. HOIST SYSTEM INOPERATIVE.	DELAY FOR REPAIRS.	3
UP	PUSH BUTTON	PENDANT MOUNTED PUSH BUTTON PROVIDES ABILITY TO ENERGIZE HOIST SYSTEM IN THE UP DIRECTION OF TRAVEL.	A1. FAILS CLOSED 1st DETENT B1. INTERNAL PART FAILURE	HOIST SYSTEM WILL CONTINUE TO MOVE AFTER OPERATOR COMMANDS STOP. OPERATOR CAN STOP HOIST BY USING E-STOP/OFF BUTTON ON CRANE 15-2 PENDANT.	DELAY FOR REPAIRS. REQUIRES MULTIPLE FAILURES.	3
DOWN	PUSH BUTTON	PENDANT MOUNTED PUSH BUTTON PROVIDES ABILITY TO ENERGIZE HOIST SYSTEM IN THE DOWN DIRECTION OF TRAVEL.	A1. FAILS CLOSED B1. INTERNAL PART FAILURE	HOIST WILL CONTINUE TO MOVE AFTER OPERATOR COMMANDS STOP. OPERATOR CAN STOP HOIST BY USING E-STOP/OFF BUTTON ON CRANE 15-2 PENDANT.	DELAY FOR REPAIRS. REQUIRES MULTIPLE FAILURES.	3

5.3 Flex Hose FMEA Worksheets

There are no flex hoses associated with this equipment.

5.4 Orifice FMEA Worksheets

There are no orifices associated with this equipment.

5.5 Filter FMEA Worksheets

There are no filters associated with this equipment.

5.6 Requirements of NSS/GO-1740.9B

NSTS 22206, Revision D, requires that noncompliance to the requirements of NSS/GO-1740.9B, "NASA Safety Requirement for Lifting Devices and Equipment," be identified in the FMEA. Performance of the FMEA determined that the Duff-Norton four-ton Coffing hoist is in compliance with the requirements of NSS/GO-1740.9B.

5.7 Critical Items List

There was one critical item identified during this analysis. The critical item is defined as a Single Failure Point (SFP), in accordance with NSTS 22206, Revision D.

5.7.1 Critical Item List

PART NAME	QUANTITY	CRITICALITY
Hoist Transmission	1	2

5.7.2 Critical Item Acceptance Rationale Sheets

The technical rationale for accepting the risk of retaining the Critical Item is documented on the following Critical Item Sheets.

Critical Item: Hoist Transmission
Criticality Category: 2

System/Area: Duff-Norton Four-Ton Coffing Hoist/Building 15

Part No.: See Table 1: Parts List, Hoist Transmission

Function: Reduces rotational speed from hoist motor to load sheave and supplies torque to the Output Shaft

Critical Failure Mode: Disengages

Failure Cause: Broken teeth, structural failure

Failure Effect: Load will drop, could cause damage to flight hardware. Most probable result of structural failure would be binding and/or noisy operation

ACCEPTANCE RATIONALE

Design:

The subject four-ton hoist is an off-the-shelf, OEM type equipment and meets the requirements of NSS/GO-1740.9B and is acceptable for critical lift applications.

Gearing design based on AGMA Standards.

Structural failure would be required for disengagement. Most probable result of structural failure would be binding and/or noisy operation.

Test:

- Periodic test and inspection is performed in accordance with "Test and Inspection Procedure for Gantry, Electric Wire Rope Hoist, Manual Trolley, Gantry No. M-16-1," NSI Procedure Number 44-06-444.
- Hoist is operated through its entire length of travel prior to each critical lift or once a day if multiple lifts are to be performed.
- Perform "daily inspections" in accordance with paragraph 203.d. of NSS/GO-1740.9B.
- Hoist was proof load tested to 125% rated load after installation and prior to first use.
- Hoist system is load tested at 100% rated load annually.

Inspection:

- Inspection is performed in accordance with the aforementioned NSI Procedure Number 44-06-444 and NSI Report Number 44-06-444, "Periodic Test and Inspection Report; Gantry, Electric Wire Rope Hoist, Manual Trolley." Formal periodic inspection reports are documented by qualified, authorized personnel.

- Gear Reducer is visually inspected prior to each use for visual signs of leakage or cracks.

- Gear Reducer oil level is checked quarterly.

- Gear Reducer oil is sampled annually for water, particles or other contamination.

Failure History:

Twenty-six Coffing hoists in the GSFC inventory have continually demonstrated reliability. No hardware test and inspection failures have been documented to date.

Operational Use:

Hoist transmission failure would, most probably, result from the specific failure of the output gear assembly. Broken gear teeth would be detected by noisy transmission operation and/or binding. Corrective action would require the operator to immediately cease lifting operation and implement emergency procedures.

Catastrophic failure of the hoist transmission resulting in dropping the load is unlikely. This failure scenario would take multiple failures of gear teeth without operator detection and intervention.

5.8 Risk Assessment

The following evaluation of risk acceptance was performed in accordance with the criteria of NHB 1700.1(V1-B) and RECERT-42-011. A Risk Assessment Matrix is included. See Figure 7. The Severity and suggested Likelihood of Occurrence for each of the Critical Items is documented. The Controls are considered to be in place to achieve minimum residual risk. Definitions for Risk Severity Level, Likelihood of Risk Occurrence and Risk follow.

Risk Severity Level

Marginal - a hazard that could result in a mishap or minor mishap inflicting first-aid injury to personnel, and/or damage to flight hardware or ground equipment which can be tolerated or repaired without significant program delay.

Critical - a hazard that could result in serious injury to personnel and/or damage to flight hardware or ground equipment which could cause a significant program delay.

Catastrophic - a hazard that could result in a mishap causing fatal injury to personnel and/or loss of one or more major elements of the flight hardware or ground facility.

Likelihood of Risk Occurrence

Probable - expected to happen
Occasional - could happen
Remote - not expected to happen

Unacceptable Risk - Minor Uncertainties Exist. Further action will be required to reduce the risk to an acceptable level.

Acceptable Risk - Minor Uncertainties Exist. The level of risk from the activity is assessed to be sufficiently low to approve the activity.

Acceptable Risk - Uncertainties Controlled/Managed. The in-place controls have significantly reduced the risk level such that hazard occurrence is not expected to happen.

The recommended Controls are summarized below.

- Perform the tests and inspections identified in the Critical Item List to minimize the probability of occurrence of the documented failure mode and cause.

- Document applicable procedures to provide specific instructions pertinent to the hoist transmission.

GSFC RECERTIFICATION
HAZARD SEVERITY LEVELS VERSUS LIKELIHOOD OF OCCURRENCE FOR RISK ASSESSMENT*

		HAZARD* SEVERITY LEVELS		
		MARGINAL (COULD RESULT IN MINOR INJURY OR MINOR FLIGHT HARDWARE DAMAGE)	CRITICAL (COULD RESULT IN SERIOUS INJURY OR SIGNIFICANT FLIGHT HARDWARE DAMAGE)	CATASTROPHIC (COULD RESULT IN FATALITY OR LOSS OF FLIGHT HARDWARE)
LIKELIHOOD	*PROBABLE (EXPECTED TO HAPPEN)*	UNACCEPTABLE RISK (UNCERTAINTIES EXIST)	UNACCEPTABLE RISK (UNCERTAINTIES EXIST)	UNACCEPTABLE RISK (UNCERTAINTIES EXIST)
	OCCASIONAL (COULD HAPPEN)	ACCEPTABLE RISK (MINOR UNCERTAINTIES EXIST)	UNACCEPTABLE RISK (MINOR UNCERTAINTIES EXIST)	UNACCEPTABLE RISK (MINOR UNCERTAINTIES EXIST)
	REMOTE (NOT EXPECTED TO HAPPEN)	ACCEPTABLE RISK (UNCERTAINTIES CONTROLLED/ MANAGED)	ACCEPTABLE RISK (UNCERTAINTIES CONTROLLED/ MANAGED)	ACCEPTABLE RISK (UNCERTAINTIES CONTROLLED/ MANAGED) CRANE 15-2

* THIS GSFC RECERT RISK ASSESSMENT MATRIX IS A MODIFIED VERSION OF FIGURE G-1, APPENDIX G, IN NHB 1700.1(V1-B), "NASA SAFETY POLICY AND REQUIREMENTS DOCUMENT," JUNE 1993.

Figure 4

SECTION 6 - CONTROL LOGIC ANALYSIS

There are no control/monitor functions associated with this lifting system. No control logic analysis was, therefore, performed.

SECTION 7 - EMERGENCY SAFING ANALYSIS

This system is not controlled by a computer control system. No emergency safing analysis is, therefore, required.

SECTION 8 - SNEAK CIRCUIT ANALYSIS

The methodology for the control of sneak circuits is not implemented in the design of this lifting system. No sneak circuit analysis is, therefore, performed.

SECTION 9 - RECOMMENDATIONS

- Perform test and inspection of the hoist transmission in accordance with the Critical Item Acceptance Rationale sheets and the manufacturer's recommended inspection and maintenance check list.

- Document applicable inspection procedures to provide specific instructions pertinent to the hoist transmission.

- Perform test and inspections of the hazardous conditions identified in the O&SHA in accordance with the Hazard Elimination/Control Procedures.

- Only certified and trained operators shall be authorized to operate the powered hoist.

- Critical lift operators must be trained in the specific hazards and special procedures associated with the lift, including those identified herein. The critical lift procedures should contain the cautions listed.

- Document the following procedures and enter the Document No. in the O&SHA under the applicable Verification Method.

  - Emergency procedures for contingency actions such as transmission failure, limit switch failure, fire, speed control failure or other O&SHA emergencies.

  - Approved specific, technical inspection procedures for lifting devices or equipment with particular emphasis to the hoist transmission.

  - Critical lift procedure

- Perform proof load tests and rated load tests in accordance with NSS/GO-1740.9B, Para. 402.a and 402.b, respectively.

- Operator/maintenance personnel must follow OEM instructions for gantry adjustment, assembly and disassembly.

- Track the required corrective actions and maintain the Hazardous Condition "Status" on the O&SHA Worksheet - current. Document closure date. Document the corrective actions and provide as an attachment.

- Update this analysis, as required, to reflect any changes in operation, hoist configuration, or facility improvements.

- Perform an analysis of the facility environment-human relationship that could cause potential sources of danger. Combine this analysis with the O&SHA, herein, to develop the Systems Hazard Analysis (SHA).