****
* **ManTech** *
* *
*Document # 40-01-711 *
****

Failure Modes and Effects Analysis
and Critical Items List for
Crane 7-8 Located in Building 7,
Room 032, Vibration Lab

ManTech Document Number

40-01-711

July 2004

PREPARED BY: Mel Crompton 7.8.04
M. Crompton, Project Engineer, Recertification Function Date

APPROVED/
REVIEWED BY: Warren Thomas 07/09/04
W. Thomas, Manager, Recertification Function Date

APPROVED BY: 7/23/2004
S. Chan, RECERT Manager Code 540, NASA/GSFC Date

MANTECH INTERNATIONAL CORPORATION

Recertification Function
ManTech Aerospace Technology Applications Center
Goddard Space Flight Center
Greenbelt, Maryland 20771

Table of Contents

Page

Preface ii
List of Figures ii
List of References ii
1.0 Summary of Findings 1
1.1 System Criticality 1
1.2 Mechanical Critical Items 1
1.3 Electrical Critical Items 2
1.4 Hazards Identified 2
1.5 Critical Flexhoses 2
1.6 Critical Orifices 2
1.7 Critical Filters 2
1.8 End-to-End Areas of Concern 2
1.9 Sneak Circuits Identified 2
2.0 Failure Mode And Effects Analysis 2
2.1 System Description 2
2.2 Crane Criticality Assessment 11
2.3 Mechanical/Electrical FMEA Worksheets: 11
2.4 Critical Items List (CIL) 16
2.5 Critical Items Acceptance Rationale 16
Critical Item 1 – Drum Gear 17
Critical Item 2 – Intermediate Gear 19
Critical Item 3 – Motor Pinion 21
Critical 1R Item 4 – Mechanical Load Brake 23
Critical 1R Item 5 – Hoist Motor Brake 25
Critical 1R Item 6 – Initial Upper Limit Switch 27
Critical 1R Item 7 – Final Upper Limit Switch 29
Critical Item 8 – Yoke Assembly 31
3.0 Risk Assessment 34
4.0 Controls And Verifications 36
5.0 Rationale For Criticality Category Downgrade 36
6.0 Control Logic Analysis 36
7.0 End-To-End Analysis 37
8.0 Sneak-Circuit Analysis 37
9.0 Recommendations 37
10.0 Conclusion 37

Preface

This document is compliant with the general methodology of NSTS 22206, "Requirements for Preparation and Approval of Failure Modes and Effects Analysis and Critical Items List."

List of Figures

Number	Title	Page
1	Type HRA Hoist	3
2	Cutaway View of Hoist	4
3	Main Hoist Assembly	5
4	Geared Trolley, Model HRA	8
5	Crane 7-8 Risk Assessment Code Matrix	35

List of References

The following documents were used in completing this analysis:

1. P&H Electric Hoists, "Care and Operation and Operation and Replacement Parts Manual," Bulletin RA 2-3.

2. Requirements for Preparation and Approval of Failure Modes and Effects Analysis (FMEA) and Critical Items List (CIL); NSTS 22206, Revision D; December 10, 1993.

3. Inspection and Preventive Maintenance Procedure for Monorail Crane 7-8 Vibration Test Cell 032, ManTech Procedure 25-06-054-5, May 2002.

4. Lifting Device Operator Daily Crane and Hoist Inspection and Limit Switch Test, RECERT 42-001, Revised 1995.

5. NASA-STD-8719.9, "NASA Safety Standard for Lifting Devices and Equipment," May 2002.

6. NPG 8715.3, "NASA Safety Manual," January 24, 2000.

7. Specification and Statement of Work for the Installation of a Second Hoist Limit Switch on Cranes 7-8, 7-9, 7-13 in Building 7 and Crane 5-7 in Building 5 at the Goddard Space Flight Center, Greenbelt, Maryland.

1.0 Summary of Findings

1.1 System Criticality

Crane 7-8 (Hoist P&H Heavy Lift, capacity 2 tons, monorail, model # 75234, Serial Number HRA 62641) is assessed as critical because failure of the crane would cause loss of life and/or critical hardware. The crane functions are identified and assessed on the criticality summary sheet (See Section 2.2)

1.2 Mechanical Critical Items

The Mechanical Critical Items identified are summarized below. The rationale for acceptability is provided as part of the Critical Item Acceptance Rationale, Section 2.5.

No.	Critical Item	Original Criticality	Downgraded Criticality	Risk
1	Drum Gear	1	3	Controlled
2	Intermediate Gear	1	3	Controlled
3	Motor Pinion	1	3	Controlled
4	Mechanical Load Brake	1R	3	Controlled
5	Hoist Motor Brake	1R	3	Controlled
6	Initial Upper Limit Switch	1R	3	Controlled
7	Final Upper Limit Switch	1R	3	Controlled
8	Yoke Assembly	1	3	Controlled

The Criticality Category of the critical items was downgraded from the original 1/1R criticality to a "3" due to the implementation of defined and approved operational controls.

TABLE 1
GSE CRITICALITY CATEGORY DEFINITONS

Criticality	Potential Effect or Failure
1	Single failure that could result in loss of life or load.
1R	Two redundant hardware items, which if both failed, could result in loss of life or load (or loss of a safety or hazard monitoring system).
1S	Single failure in a safety or hazard monitoring system that could cause the system to fail to detect, combat, or operate when needed during the existence of a hazardous condition and could result in loss of life or load.
2	Single failure that could result in loss (damage) of a load.
3	All others

1.3 Electrical Critical Items

See Table 1 in Section 1.2.

1.4 Hazards Identified

Justification for retaining the critical items listed above was based on the data elements provided in See Section 2.5. This justification included the following information: Design, Test, Inspection, Failure History, and Operational Use. Risk assessment, based on the criteria identified in Reference 6, determined the risk to be acceptable/controlled for the retention of the above critical items.

1.5 Critical Flexhoses

There were no critical flexhoses identified in this lifting device.

1.6 Critical Orifices

There were no critical orifices identified in this lifting device.

1.7 Critical Filters

There were no critical filters identified in this lifting device.

1.8 End-to-End Areas of Concern

No areas of concern were identified which are the design responsibility of other contractors or NASA centers.

1.9 Sneak Circuits Identified

There was no sneak circuit analysis performed on Crane 7-8.

2.0 Failure Mode And Effects Analysis

2.1 System Description

Crane 7-8 consists of a 2-ton capacity, under hung trolley and Type HRA hoist suspended from a single girder mounted at a right angle to the monorail. See Figure 1. The hoist is double reeved for true vertical lift. The crane is located in Building 7, Room 032 of the Vibration Lab. Crane 7-8 supports the loading, unloading, and handling of structures designed for use as flight hardware. The crane is pendant controlled at floor level.

The hoist is composed of: (See Figures 2 and 3)

Main Hoist

The hoisting unit is provided with two means of breaking, each capable of bringing a rated load to zero speed and holding it with and without power. The motor brake is a multiple friction electromagnetic disc brake. The second brake is a mechanical load brake also on the gear side of the drive. An initial geared, upper-limit switch and whisker final, upper-limit switch are provided for over travel protection. A lower-limit switch, to prevent reverse winding of the wire rope, is provided.

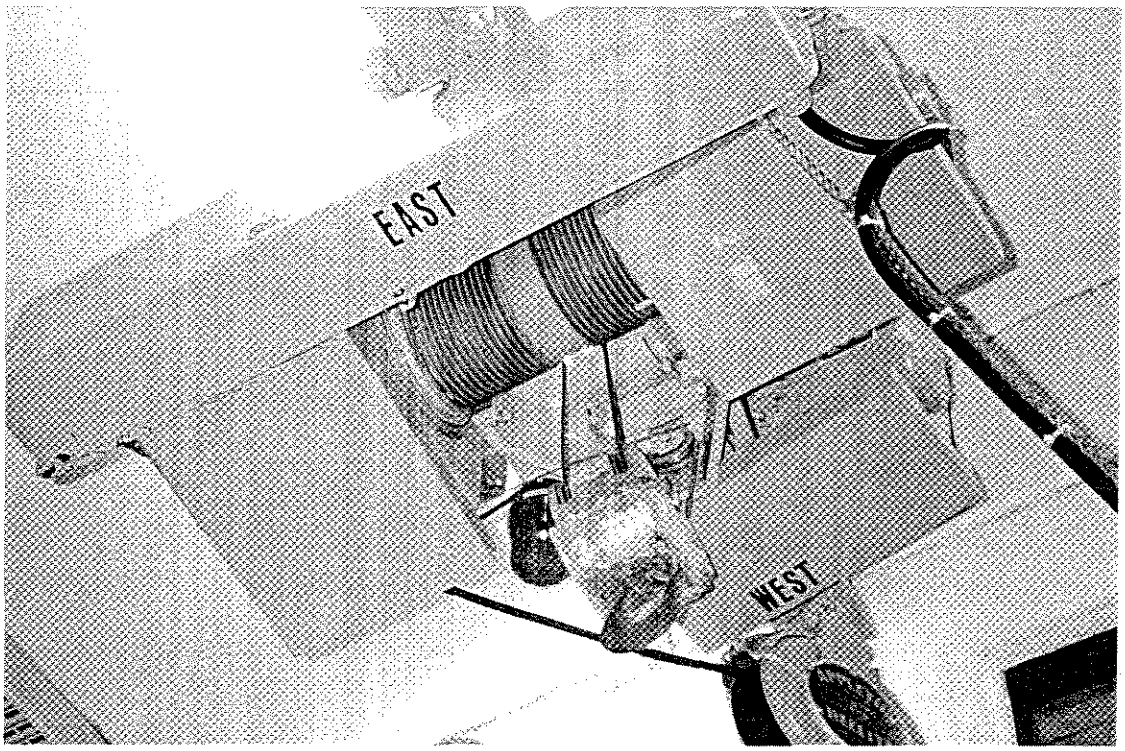

Figure 1 Type HRA Hoist

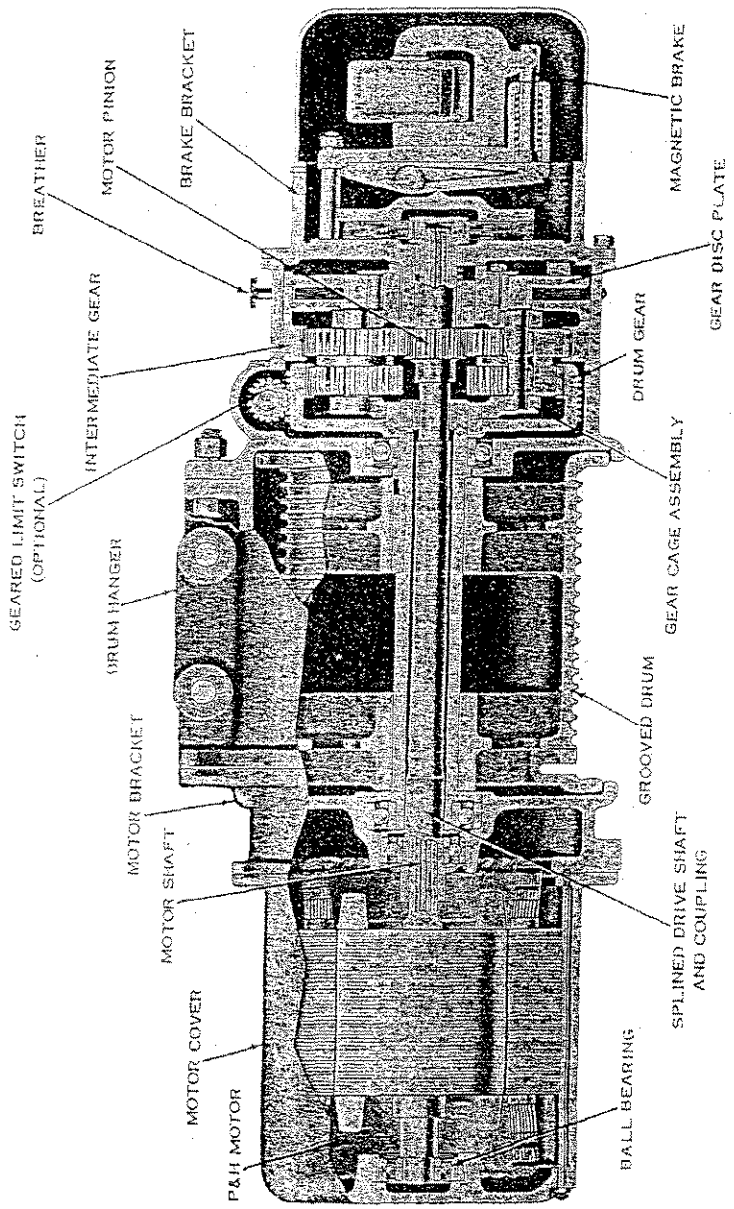

Figure 2 Cutaway View of Hoist

MAIN HOIST ASSEMBLY, MODELS HRA AND EHRA
(SERIAL NO. 61650 AND UP)

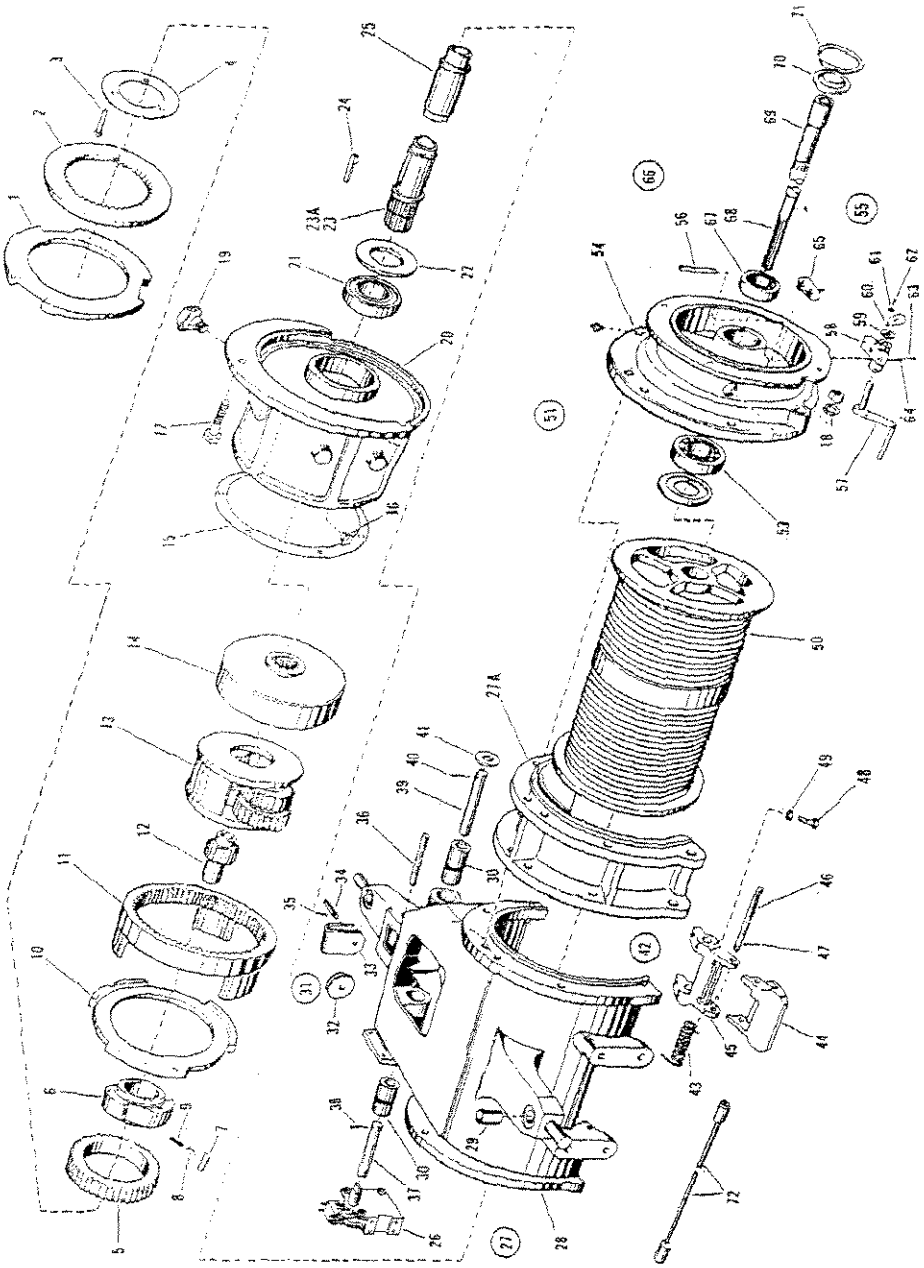

Figure 3 Main Hoist Assembly

MAIN HOIST ASSEMBLY, MODELS HRA and EHRA

Ref.	Description	500 - 1000# Capacity	2000# Capacity	4000# Capacity	Amt.
1	Gear Disc Plate	315F51D3	315F51D1	315F51D2	1
2	Revolving Disc Plate	315F27D1C1	315F27D1C1	315F27D1C1	1
3	Cap Screw 7/16" x 1-13/16"	320H292	320H292	320H292	3
4	Plate	318H1016	318H1016	318H1016	1
5	Ratchet Ring	301F78C2	301F78C2	301F78C2	1
6	Ratchet	313F241	313F241	313F241	1
7	Roller	313H54	313H54	313H54	3
8	Pin	19F79D38	19F79D38	19F79D38	3
9	Spring	317H45	317H45	317H45	3
10	Stationary Disc Plate	315F52C1	315F52C1	315F52C1	1
11	Intermediate Gear	301F1130	301F1130	301F1130	1
12	Motor Pinion	301F1129	301F1129	301F1129	1
13	Gear Cage Assembly	L.3100F611-2	- - - - - - - -	L.3100F611-5	1
	Gear Cage Assembly - Used when Ref. 14 has 62 Teeth (2000# Capacity Only)	- - - - - - - -	L.3100F611-3	- - - - - - - -	1
	Gear Cage Assembly - Used when Ref. 14 has 63 Teeth (2000# Capacity Only)	- - - - - - - -	L.3100F611-4	- - - - - - - -	1
14	Drum Gear - For use with Weight Operated Limit Switch	301F730	- - - - - - - -	301F800	1
	Drum Gear - For use with Geared Limit Switch	301F731	- - - - - - - -	301F801	1
	Drum Gear - 62 Teeth - For use with Weight Operated Limit Switch (2000# Capacity Only)	- - - - - - - -	301F685	- - - - - - - -	1
	Drum Gear - 62 Teeth - For use with Geared Limit Switch (2000# Capacity Only)	- - - - - - - -	301F726	- - - - - - - -	1
	Drum Gear - 63 Teeth - For use with Weight Operated Limit Switch (2000# Capacity Only)	- - - - - - - -	301F732	- - - - - - - -	1
	Drum Gear - 63 Teeth - For use with Geared Limit Switch (2000# Capacity Only)	- - - - - - - -	301F733	- - - - - - - -	1
15	Gasket	320F39	320F39	320F39	1
16	Key	320H294	320H294	320H294	1
17	Machine Bolt 1/2" x 1-3/4"	0626V080	0626V080	0626V080	4
	Machine Bolt 5/16" x 1-1/4"	0626V024	0626V024	0626V024	6
18	Lockwasher 1/2"	3615V011	3615V011	3615V011	4
	Lockwasher 5/16"	3616V008	3616V008	3616V008	6
19	Airmaze Breather	46Z4	46Z4	46Z4	1
20	Gear Case - For use with Geared Limit Switch	314E689	314E689	314E689	1
	Gear Case - For use with Weight Operated Limit Switch	314E688	314E688	314E688	1
21	Ball Bearing	25T817D7	25T817D7	25T817D7	1
22	Washer	318H487	318H487	318H487	1
23	Drum Sleeve Assembly (Incl Ref. 23A and 24)	318H2163F1	318H2163F1	318H2163F1	1
23A	Bushing	305H87C1	305H87C1	305H87C1	1
24	Key	20H1393D7	20H1393D7	20H1393D7	1
25	Drum Sleeve	318H2162	318H2162	318H2162	1
26	Limit Switch - Lever Operated Only (See Figure 33 for details)	L.100F189-1	L.100F189-1	L.100F189-1	1
27	Drum Hanger Assembly - Model HRA with Lever Operated Limit Switch only (Consists of Ref. 28 thru 49)	L.9316E60-1	L.9316E60-1	L.9316E60-1	1
	Drum Hanger Assembly - Model EHRA with Lever Operated Limit Switch only (Consists of Ref 27A and 28 thru 49)	L.9316E60-2	L.9316E60-2	L.9316E60-2	1
	Drum Hanger Assembly - Model HRA with Geared Limit Switch (Consists of Ref. 26 thru 36)	L.9316E60-3	L.9316E60-3	L.9316E60-3	1
	Drum Hanger Assembly - Model EHRA with Geared Limit Switch (Consists of Ref. 27A and 28 thru 36)	L.9316E60-4	L.9316E60-4	L.9316E60-4	1
27A	Spacer Hanger - Model EHRA only	316E1043	316E1043	316E1043	2
28	Drum Hanger (Incl Ref. 29 and 30)	316E1042	316E1042	316E1042	1
29	Bushing 1-1/4" OD x 1" ID x 1-5/8" Lg	305H85C1	305H85C1	305H85C1	1
30	Bushing 1-1/4" OD x 5/8" ID x 1-1/4" Lg	305H116C1	305H116C1	305H116C1	4
31	Equalizer Assembly (Consists of Ref. 32 thru 35)	L.9307H2-1	L.9307H2-1	L.9307H2-1	1
32	Sheave	307H2F1	307H2F1	307H2F1	1
33	Link	318H62	318H62	318H62	1
34	Pin	19F52D6	19F52D6	19F52D6	1
35	Cotter Pin 3/32" x 1-1/4"	2201V051	2201V051	2201V051	2
36	Pin	319H19	319H19	319H19	1
37	Shaft - Used only with Lever Operated Limit Switch	310H431	310H431	310H431	1
38	Cotter Pin 5/32" x 1-1/4"	2201V051	2201V051	2201V051	2
39	Pin - Used only with Lever Operated Limit Switch	319H1001	319H1001	319H1001	1
40	Cotter Pin 1/8" x 1"	2201V033	2201V033	2201V033	1
41	Washer - 5/8" - Used only with Lever Operated Limit Switch	3611V011	3611V011	3611V011	1
42	Lever Assembly - Used only with Lever Operated Limit Switch (Consists of Ref. 43 thru 49)	L.9306F11-1	L.9306F11-1	L.9306F11-1	1

MAIN HOIST ASSEMBLY, MODELS HRA and EHRA (Cont.)

Ref.	Description	500 - 1000# Capacity	2000# Capacity	4000# Capacity	Amt.
43	Spring	317H29	317H29	317H29	1
44	Lever	306F17	306F17	306F17	1
45	Lever	306F16	306F16	306F16	1
46	Pin	319H152	319H152	319H152	1
47	Cotter Pin	2201V021	2201V021	2201V021	1
48	Set Screw	0692V021	0692V021	0692V021	2
49	Jam Nut	2022V002	2022V002	2022V002	2
50	Drum - Model HRA	323E786	323E786	323E646	1
	Drum - Model EHRA	323E764	323E764	323E765	1
51	Motor Bracket Assembly - for Hoists without Micro-Lower Limit Switch (Consists of Ref. 52-53-54)	L.9316E61-2	L.9316E61-2	L.9316E61-2	1
	Motor Bracket Assembly - for Hoists with Micro - Lower Limit Switch (Consists of Ref. 52 thru 65)	L.9316E61-1	L.9316E61-1	L.9316E61-1	1
52	Retainer Ring	318H2161	318H2161	318H2161	1
53	Ball Bearing	25T816D5	25T816D5	25T816D5	1
54	Bracket	316E1041	316E1041	316E1041	1
55	Lower Limit Switch Bracket Assembly (Consists of Ref. 56 thru 64)	L.3100F261-2	L.3100F261-2	L.3100F261-2	1
56	Pin	319H915	319H915	319H915	1
57	Lever	306H246	306H246	306H246	1
58	Bracket	316H276	316H276	316H276	1
59	Washer - 5/16"	3612V009	3612V009	3612V009	1
60	Spring	317H119	317H119	317H119	1
61	Machine Screw #6-32 x 1/4"	0660V035	0660V035	0660V035	1
62	Lockwasher #6	3616V003	3616V003	3616V003	1
63	Machine Screw #10-24 x 3/4"	0660V078	0660V078	0660V078	2
64	Lockwasher #10	3616V005	3616V005	3616V005	2
65	Micro Switch Assembly	L.3100H30-1	L.3100H30-1	L.3100H30-1	1
66	Motor Coupling Shaft Assembly - Model HRA only (Consists of Ref. 67-68-69)	L.9310F66-2	L.9310F66-2	L.9310F66-2	1
	Motor Coupling Shaft Assembly - Model EHRA only (Consists of Ref. 67-68-69)	L.9310F66-5	L.9310F66-5	L.9310F66-5	1
67	Ball Bearing	25T816D3	25T816D3	25T816D3	1
68	Shaft - Model HRA	310F649	310F649	310F649	1
	Shaft - Model EHRA	310F1165	310F1165	310F1165	1
69	Coupling	318H1317C1	318H1317C1	318H1317C1	1
70	Washer	318H71	318H71	318H71	1
71	Lock Ring	318H72	318H72	318H72	1
	Cable Assembly - Model HRA - 17'-0" Lift	L.9308H22-2	L.9308H22-2	- - - - - - - -	1
	Cable Assembly - Model HRA - 14'-0" Lift	- - - - - - - -	- - - - - - - -	L.9308H112-1	1
	Cable Assembly - Model EHRA - 26'-0" Lift	L.9308H22-3	L.9308H22-3	- - - - - - - -	1
	Cable Assembly - Model EHRA - 21'-0" Lift	- - - - - - - -	- - - - - - - -	L.9308H112-2	1

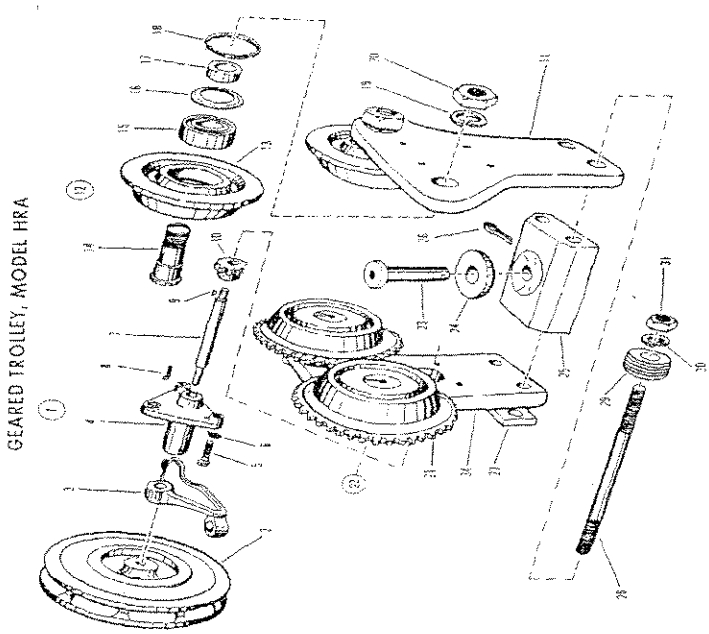

Figure 4 Geared Trolley, Model HRA

GEARED TROLLEY, MODEL HRA ONLY

Ref. No.	Part No.	Description	No. Req'd.
1	L. 3100E850-1	Geared Trolley Assembly (6" to 9" Beam)	1
	L. 3100E850-2	Geared Trolley Assembly (10" Beam)	1
	L. 3100E850-3	Geared Trolley Assembly (12" Beam)	1
	L. 3100E850-4	Geared Trolley Assembly (15" Beam)	1
2	313F8	Chain Wheel	1
3	314F3	Chain Guard	1
4	316H424	Bracket	1
5	0626V023	Capscrew - 5/16" x 1"	3
6	3616V008	Lockwasher - 5/16"	3
7	310H375F1	Shaft - Includes Ref. 8 and 9	1
8	20H1479D2	Gib Key	1
9	20H1370D3	Flat Key	1
10	301F785	Pinion	1
11	322F72	Truck Side - Plain	1
12	L. 9313H43-1	Plain Truck Wheel Assembly - With Open Type Bearings	2
	L. 9313H43-2	Plain Truck Wheel Assembly - With Sealed Bearings Each Includes Ref. 13 Thru 20	2
13	313H127C1	Wheel - Plain - For Use With Open Type Bearings	1
	313H208	Wheel - Plain - For Use With Sealed Bearings	1
14	310H237	Axle	1
15	25T830D1	Bearing - Open Type	1
	25Z542D1	Ball Bearing - Sealed	1
16	318H660	Cup Washer - For Use With Open Type Bearings Only	1
17	318H1068	Spacer	1
18	318H72	Lock Washer	1
19	3615V016	Lockwasher - 7/8"	1
20	2022V009	Jam Nut - 7/8"	1
21	313F459	Wheel - Geared - For Use With Open Type Bearings	1
	313F664	Wheel - Geared - For Use With Sealed Bearings	1
22	L. 9313H64-1	Geared Truck Wheel Assembly - With Open Type Bearings	2
	L. 9313H64-2	Geared Truck Wheel Assembly - With Sealed Bearings Each Includes Ref. 14 Thru 21	2
23	319H701	Pin	1
24	318H1027	Washer	1
25	316F603	Yoke	1
26	2201V070	Cotter Pin - 3/16" x 2"	1
27	318H1285	Filler Plates (10" I-Beam)	2
	318H1725	Filler Plates (12" I-Beam)	2
	318H1726	Filler Plates (15" I-Beam)	2
28	320H683D4	Rod Bolts (6" to 9" I-Beam)	2
	320H683D5	Rod Bolts (10" I-Beam)	2
	320H683D6	Rod Bolts (12" I-Beam)	2
	320H683D7	Rod Bolts (15" I-Beam)	2
29	3612V008	Plain Washers	20
30	3615V013	Lockwasher - 5/8"	4
31	2045V007	Hex Nuts - 5/8"	4
32	20Z483	Chain Repair Link	1
33	20Z269D32	Hand Chain (Advise Length Required)	1
34	322E249	Truck Side - Geared	1

Hoist Upper Limit Switches

Dual upper limit switches are provided. Initial upper limit switch electrical contacts are a set of normally closed contacts in the "raise" contactor circuit such that movement in the raise direction is precluded after the limit switch is encountered. Movement in the "lower" direction is not inhibited.

Final upper limit switch electrical contacts are a set of normally closed electrical contacts wired into the hoist power circuit, such that all hoist motion is precluded after the limit switch is encountered. These normally closed contacts are located in the low voltage circuitry.

Movement of the load, post actuation of the final upper limit switch, requires resetting at the final upper limit switch level.

Trolley Assembly (see Figure 4, Geared Trolley)

The trolley has a single speed and is motor-driven. The trolley assembly consists of a pair of geared truck wheels, Model HRA. Trolley travels in the East/West direction, and is limited by mechanical stops. Trolley operation is via a floor-operated pendant station.

Controls

The pendant station has the following controls: Off-On, Hoist speed Lo/High, Hoist Raise/Lower, Trolley East/West.

Drum and Shaft Bearings

NSTS 22206, See Reference 2, requires that bearings on drums and shafts be analyzed only to determine if the bearings can fail and drop the load. The following bearings and effect of failure were identified.

ITEM	EFFECT OF FAILURE
▪ Drum Bearings	Loss of Function
▪ Gear Case Bearings	Loss of Function
▪ Motor Couplings Shaft Assembly	Loss of Function
▪ Trolley Wheel Bearing	Loss of Function

Rationale for Acceptability follows:

- Lubricant: Dow-Corning DC200 Silicon Oil (or equal)
- The crane typically operates at low speeds
- Crane 7-8 was designed for Moderate Service (Class C) and operates at Light Service (Class B)

Analysis indicated the bearings to be acceptable. No further discussion is provided on these items.

Passive Components/Shafting

Passive components are not analyzed in the FMEA. The current list of passive components includes the hook, load block, wire rope, sheaves, and rope drum. Shaft attachment methods are analyzed for shafts located between the drum and brake. Shaft attachment points are considered passive, in accordance with NSTS 22206, if the shaft is welded or physically attached to the drum by a method approved by the hoisting standards. The shafts so identified, by Reference 1, are listed below.

Item No.	Method of Attachment	Standard
Drum Sleeve Assembly	Keyed and Splined	CMAA/ANSI
Shaft Part of Motor Coupling Shaft Assembly	Keyed/Splined	CMAA/ANSI
Geared Trolley Drive Shaft	Keyed/Splined	CMAA/ANSI

Analysis results of the shaft attachment points meet the criteria of NSTS 22206 and are, therefore, considered passive and acceptable as they are.

2.2 Crane Criticality Assessment

The crane functions are identified and assessed on the following Criticality Assessment Summary Sheet.

CRANE CRITICALITY ASSESSMENT SUMMARY SHEET				
Crane No. 7-8, Room 032, Vibration Lab Location: Building 7			Prepared By: M. Crompton Date: September 2002	
Output	**Function**	**Effect of Loss/Failure**	**Crit Cat**	**Notes**
Handling of Project Flight Hardware	Raises/lowers and provides east/west direction movement of critical equipment	Load may drop resulting in possible loss of life or injury to personnel, loss of/potential damage to Flight Hardware or both.	Critical	See FMEA Worksheets

2.3 Mechanical/Electrical FMEA Worksheets:

The mechanical/electrical components of this equipment are identified from the documents and diagrams in the reference list and are analyzed on the following worksheets.

FAILURE MODE AND EFFECTS ANALYSIS (FMEA) WORKSHEET					
Crane 7-8: 2, Ton P&H				Date: September 2002	
Location: Building 7, Rm. 032; (Mechanical/Electrical)				Prepared By: M. Crompton	
PART NAME	**PART FUNCTION**	**FAILURE MODE & CAUSE**	**FAILURE EFFECT ON SYSTEM PERFORMANCE**	**FAILURE EFFECT ON CRITICAL HARDWARE AND/OR PERSONNEL SAFETY**	**CRIT CAT**
Hoist Drive Motor	Prime mover of Hoist	Loss of electrical power (open/short windings)	Unable to operate. Brakes will set.	No effect. Delay in operation.	3
		Mechanical failure of motor (structural failure components)	Unable to operate. Brakes will set.	No effect. Delay in operation.	3
Motor Brake	Holds load after hoisting or when de-energized	Fails to engage (structural failure of component)	Mechanical brake engages. Load cannot be raised or lowered.	No effect. Delay in operation.	1R
		Does not release.	Loss of function.	No effect. Delay in operation.	
Mechanical Load Brake	Holds load after hoisting or when de-energized	Fails to engage (excessive disc plate wear).	Motor brake engages. Cease operation.	No effect. Delay in operation.	1R
		Fails to disengage.	Motor brake engages. Load cannot be raised or lowered. Cease operation.	No effect. Delay in operation.	
Drum Gear	Transmits power and reduces rotational speed	Disengages (structural failure of components)	Torque for holding load will be lost. Load will drop.	Possible damage to equipment.	1
Intermediate Gear	Transmits power and reduces rotational speed	Disengages (structural failure of components)	Torque for holding load will be lost. Load will drop.	Possible damage to equipment.	1
Motor Pinion Gear	Transmits power and reduces rotational speed	Disengages (structural failure of components)	Torque for holding load will be lost. Load will drop.	Possible damage to equipment.	1

FAILURE MODE AND EFFECTS ANALYSIS (FMEA) WORKSHEET

CRANE 7-8: 2 Ton P&H — DATE: September 2002

LOCATION: Building 7, Rm. 032 (Electrical) — PREPARED BY: M. Crompton

PART NAME	PART FUNCTION	FAILURE MODE AND CAUSE	FAILURE EFFECT ON SYSTEM PERFORMANCE	FAILURE EFFECT ON CRITICAL HARDWARE AND/OR PERSONNEL SAFETY	CRIT CAT
Pendant	Trolley East	Fails open: corroded contact.	Loss of trolley function.	No effect. Delay in operation.	3
		Fails closed: excessive current.	Trolley function continues until power is off.	No effect. Delay in operation.	3
	Trolley West	Fails open: corroded contact.	Loss of trolley function.	No effect. Delay in operation.	3
		Fails closed: excessive current.	Trolley function continues until power is off.	No effect. Delay in operation.	3
	Power	Fails open: corroded contact.	Loss of power to pendant.	No effect. Delay in operation.	3
		Fails closed: excessive current.	Function control lost. Secure main power.	No effect. Delay in operation.	3
	Speed Low	Fails open: corroded contact.	Loss of low speed.	No effect. Delay in operation.	3
		Fails closed: excessive current.	Low-speed function continues until power is off.	No effect. Delay in operation.	3
	Speed High	Fails open: corroded contact.	Loss of high speed.	No effect. Delay in operation.	3
		Fails closed: excessive current.	High-speed function continues until power is off.	No effect. Delay in operation.	3
	Hoist Raise	Fails open: corroded contact.	Loss of hoist function.	No effect. Delay in operation.	3
		Fails closed: excessive current.	Hoist function continues. Hoist is protected by two upper limit switches.	No effect. Delay in operation.	3

FAILURE MODE AND EFFECTS ANALYSIS (FMEA) WORKSHEET

Crane 7-8: 2 Ton P&H — Date: September 2002

Location: Building 7, Rm. 032 (Electrical) — Prepared By: M. Crompton

PART NO.	PART NAME	PART FUNCTION	FAILURE MODE & CAUSE	FAILURE EFFECT ON SYSTEM PERFORMANCE	FAILURE EFFECT ON CRITICAL HARDWARE AND/OR PERSONNEL SAFETY	CRIT CAT
700-918	Geared Upper Limit Switch, Initial	Upward movement precluded after limit switch is encountered	Fails open. Internal parts failure.	Loss of power to pendant.	Delay in operation.	1R
				Hoist is equipped with a final paddle upper limit switch, which will stop hoist travel if the primary limit switch fails open/closed. Requires multiple failures.		
	Final Whisker Upper Limit Switch	Provides redundant over travel protection in the up direction	Fails open corroded contact.	Hoist travel not stopped. Two-blocking occurs.	Potential loss of life or load. Suspended load condition may exist	1R
N/A	Electrical AC Trolley Drive Motor	Provides locomotion for trolley assembly in east/west direction	Loss of electrical power (open/short windings)	Unable to operate.	No effect. Delay in operation.	3
			Mechanical failure of motor (structural failure components)	No trolley operation.	No effect. Delay in operation.	3

FAILURE MODE AND EFFECTS ANALYSIS (FMEA) WORKSHEET					
Crane 7-8: 2 Ton P&H				Date: September 2002	
Location: Building 7, Rm. 032 (Trolley)				Prepared By: M. Crompton	
PART NAME	**PART FUNCTION**	**FAILURE MODE & CAUSE**	**FAILURE EFFECT ON SYSTEM PERFORMANCE**	**FAILURE EFFECT ON CRITICAL HARDWARE AND/OR PERSONNEL SAFETY**	**CRIT CAT**
Yoke Assembly	Connects hoist/load to the monorail.	Structural failure of component	Cease operation	Potential loss of load	1
Trolley Assembly	Travels on the monorail and supports the load.	Structural failure of component	No effect. Delay in operation.	Impaired/loss of function.	3

2.4 Critical Items List (CIL)

No.	Critical Items
1	Drum Gear
2	Intermediate Pinion Gear
3	Motor Pinion
4	Mechanical Load Brake
5	Hoist Motor Brake
6	Initial Upper Limit Switch
7	Final Upper Limit Switch
8	Yoke Assembly

2.5 Critical Items Acceptance Rationale

The justification for retaining the identified critical items is presented here. The rationale is comprised of the following data elements:

- Design
- Test
- Inspection
- Failure History
- Operational Use

The individual CIL sheets follow.

Critical Item 1 – Drum Gear

Number	Contents
1	Item Identification: Drum Gear, Model HRA, Ref. No. 14, See Figure No. 3, Crane 7-8
2	Criticality Category: 1
3	Function: Transmits lifting torque and gear reduction
4	Failure Mode: Disengages
5	Cause: Exceeding hoist capacity
6	Failure Mode Number: N/A
7	Failure Effect: Possible damage to equipment
8	Rationale for Acceptability:

Rationale for acceptance includes the following items.

A. Design

The hoist is designed to meet all OSHA requirements cited in OSHA CFR 1910.179 and 1910.306 and CMAA 70. The drum gear meets the requirements for Class C, "moderate service" and is manufactured to AGMA quality class 5 or better.

The drum gear is pressed into the end of the drum and secure, making it captive. The gear is driven by two pinion shafts, located 60° apart. Gear teeth would have to be lost at both points of contact to effectively impair the mechanical integrity of the load path at this point. All gearing is designed to AGMA standards. Risk of loss of load is minimal.

B. Test

Specific tests to detect failure modes and causes during acceptance and certification tests were performed, i.e.:

- Factory Tests Before Shipment
- Crane Acceptance Procedures

C. Inspections

A Periodic Inspection is performed annually for crane recertification. Gearing is inspected for wear and cracks. NDT techniques are used if cracks are suspected.

Inspections are performed in accordance with Paragraph 4.4 of Reference 6 (NASA-STD 8719.9).

Operational tests and inspections are performed together with rated load tests. Test reports are documented, dated, and signed. The inspection reports are maintained on file and made readily available by the Recertification Program Manager

D. Failure History

Loss of load due to loss of the hoist drum gear has not been experienced since the inception of the RECERT Program.

E. Operational Use

Critical lift operators are trained in the specific hazards and special procedures associated with the lift. Emergency procedures are addressed for contingency actions or other emergencies.

Critical Item 2 – Intermediate Gear

Number	Contents
1	Item Identification: Intermediate Pinion Gear, 2-ton P&H Hoist, Type HRA, Crane 7-8, see Figure 3, Item No. 11
2	Criticality Category: 1
3	Function: Transmits lifting torque and gear reduction.
4	Failure Mode: Excessive Load
5	Cause: Exceeding hoist capacity
6	Failure Mode Number: N/A
7	Failure Effect: Loss of critical hardware/personnel safety
8	Rationale for Acceptability:

Rationale for acceptance includes the following items

A. Design

The hoist is designed to meet all OSHA requirements cited in OSHA CFR 1910.179 and 1910.306 and CMAA 70. The intermediate pinion gear meets the requirements for Class C, "moderate service" and is designed and manufactured to AGMA standards.

The tooth face pressure is distributed across two teeth, in mesh with the two drum pinion gears. The result is a high durability factor and low fatigue.

B. Test

Specific tests to detect failure modes and causes during acceptance and certification tests were performed, i.e.:

- Factory Tests Before Shipment
- Crane Acceptance Test Procedures

C. Inspections

A Periodic Inspection is performed annually for crane recertification. Gearing is inspected for wear and cracks. NDT techniques are used if cracks are suspected.

Operational tests and inspections are performed together with rated load tests. Test reports are documented, dated, and signed. The inspection reports are maintained on file and made readily available by the Recertification Program Manager.

D Failure History

Loss of load due to loss of the hoist Intermediate Pinion Gear has not been experienced since the inception of the RECERT Program.

E. Operational Use

Critical lift operators are trained in the specific hazards and special procedures associated with the lift. Emergency procedures are addressed for contingency actions or other emergencies.

Critical Item 3 – Motor Pinion

Number	Contents
1	Item Identification: Motor Pinion, 2-Ton P&H Hoist, Type HRA Reference: Item 12, Figure 3, Crane 7-8
2	Criticality Category: 1
3	Function: Transmits lifting torque and gear reduction.
4	Failure Mode: Excessive Load
5	Cause: Exceeding hoist capacity
6	Failure Mode Number: N/A
7	Failure Effect: Loss of critical hardware/personnel safety
8	Rationale for Acceptability:

Rationale for acceptance includes the following items.

A. Design

The hoist is designed to meet all OSHA requirements cited in OSHA CFR 1910.179 and 1910.306 and CMAA 70. The motor pinion meets the requirements for Class C, "moderate service" and is manufactured to AGMA standards.

The motor gear is attached to the drum shaft via splines.

B. Test

Specific tests to detect failure modes and causes during acceptance and certification tests were performed, i.e.:

- Factory Tests Before Shipment
- Crane Acceptance Test Procedures

C. Inspections

A Periodic Inspection is performed annually for crane recertification. Gearing is inspected for wear and cracks. NDT techniques are used if cracks are suspected.

Operational tests and inspections are performed together with rated load tests. Test reports are documented, dated, and signed. The inspection reports are maintained on file and made readily available by the Recertification Program Manager.

D Failure History

Loss of load due to loss of the hoist Intermediate Pinion Gear has not been experienced since the inception of the RECERT Program.

E. Operational Use

Critical lift operators are trained in the specific hazards and special procedures associated with the lift. Emergency procedures are addressed for contingency actions or other emergencies.

Critical 1R Item 4 – Mechanical Load Brake

Number	Contents
1	Item Identification: Mechanical Load Brake Crane 7-8, 2-Ton P&H. See Figure 2, "Cutaway view of Hoist"
2	Criticality Category: 1R
3	Function: Brings load to zero speed and holds it with and without power.
4	Failure Mode: Fails to engage.
5	Cause: Excessive wear of the revolving disc plate.
6	Failure Mode Number: N/A
7	Failure Effect: a) Magnetic brake will hold the load in the event of mechanical brake failure. Delay in operation. b) Load cannot be raised or lowered in the event that one or both brakes fail to engage. Delay in operation
8	Rationale for Acceptability:

Rationale for acceptance includes the following items

A. Design

Operational redundancy is the primary design feature that minimizes the probability of loss of the load due to component failure. The design provides for load sharing redundancy wherein redundant elements are connected in such a manner that upon failure of the mechanical load brake, the remaining element, the magnetic brake will continue to perform the braking function.

B. Test

Specific tests to detect failure modes and causes during certification testing include:

- Factory Testing Before Shipment
- Crane Acceptance Testing

Operational Testing is performed together with the Rated Load Test. Operational tests for cranes used for Critical Lifts include demonstration of each brake's ability to stop and hold a rated load.

C. Inspections

Inspections are performed to a) detect whether or not critical failure modes have occurred and b) to minimize the probability of occurrence of the failure mode and cause. The following inspections are pertinent to the Mechanical Load Brake.

Daily crane inspection and limit switch tests are performed prior to first use, each day the crane is used. (See RECERT 42-001: April 1991, Revised August, 1995, Reference 4.)

Functional operating and control mechanisms are checked for maladjustments that could interfere with normal operations.

Periodic Inspection is performed in accordance with Reference 3, which is based on Reference 5 (NASA-STD-8719.9). Periodic inspections are performed annually to identify wear in brake system parts that are readily accessible without major disassembly beyond an acceptable limit.

D. Failure History

Loss of load due to brake failure has not been experienced since the inception of the RECERT Program.

E. Operational Use

Critical lift operators are trained in the specific hazards and special procedures associated with the lift. Emergency procedures are addressed for contingency actions such as power loss, brake failure, or other emergencies.

Critical 1R Item 5 – Hoist Motor Brake

Number	Contents
1	Item Identification: Hoist Motor Brake Crane 7-8, 2-Ton P&H. See Figure 2, "Cutaway view of Hoist"
2	Criticality Category: 1R
3	Function: Brings load to zero speed and holds it with and without power.
4	Failure Mode: Fails to engage.
5	Cause: Structural failure of component.
6	Failure Mode Number: N/A
7	Failure Effect: a) Mechanical brake will hold the load in the event of motor brake failure. Delay in operation. b) Load cannot be raised or lowered in the event that one or both brakes fail to engage. Delay in operation
8	Rationale for Acceptability:

Rationale for acceptance includes the following items

A. Design

Operational redundancy is the primary design feature that minimizes the probability of loss of the load due to component failure. The design provides for load sharing redundancy wherein redundant elements are connected in such a manner that upon failure of the mechanical load brake, the remaining element, the mechanical brake will continue to perform the braking function.

B. Test

Specific tests to detect failure modes and causes during certification testing include:

- Factory Testing Before Shipment
- Crane Acceptance Testing
- Operational Testing is performed together with the Rated Load Test. Operational tests for cranes used for Critical Lifts include demonstration of each brake's ability to stop and hold a rated load.

C. Inspections

Inspections are performed to a) detect whether or not critical failure modes have occurred and b) to minimize the probability of occurrence of the failure mode and cause. The following inspections are pertinent to the Mechanical Load Brake:

Daily test and inspection: performed by the certified crane operator prior to first use, each day the crane is used. (See RECERT 42-001, April 1991, Revised August 1995, Reference 4.)

Functional operating and control mechanisms are checked for maladjustments that could interfere with normal operations.

Frequent and Periodic Inspections are performed in accordance with Reference 3, which is based on Reference 5 (NASA-STD-8719.9). Periodic inspections are performed annually to identify wear in brake system parts that are readily accessible without major disassembly beyond an acceptable limit.

D. Failure History

Loss of load due to brake failure has not been experienced since the inception of the RECERT Program.

E. Operational Use

Critical lift operators are trained in the specific hazards and special procedures associated with the lift. Emergency procedures are addressed for contingency actions such as power loss, brake failure, or other emergencies.

Critical 1R Item 6 – Initial Upper Limit Switch

Number	Contents
1	Item Identification: Initial Limit Switch (Geared), Crane 7-8: 2-Ton, P&H.
2	Criticality Category: 1R
3	Function: Crane movement in the raise direction is precluded after the limit switch is encountered. Movement in the "lower" direction is not inhibited.
4	Failure Mode: a) Fails to engage b) Failure mechanism
5	Cause: a) Corroded Contacts b) Contacts fused together
6	Failure Mode Number: N/A
7	Failure Effect: a) Hoist will stop and brakes will set if moving up b) No effect. Redundant limit switches are used
8	Rationale for Acceptability:

Rationale for acceptance includes the following items:

A. Design

Operational redundancy minimizes the probability of loss of the load due to contact failure. Redundancy is "unlike" in that non-identical hardware items, e.g., initial and final upper limit switches, perform the same function.

B. Test

Periodic testing is performed annually for recertification of the Crane 7-8. Limit switches/limit switch trip is checked for attachment, position, alignment, and effectiveness.

C. Inspections

Checkout and verification of each limit switch is performed annually during formal Periodic Inspection. Details of the periodic limit switch testing are documented in Reference 4, "Inspection and Preventative Maintenance Procedure for Certification of Monorail Crane 7-8, Vibration Test Cell 032," ManTech Procedure 25-06-054-5, May 2002.

Daily inspections, performed by the certified operator, verifies the functional operation of the initial upper limit switch.

All ropes are inspected monthly for signs of deterioration and damage. Hooks are inspected for visible deformation or cracks.

D. Failure History

Loss of load due to limit switch malfunction has not been experienced since the inception of the RECERT Program.

E. Operational Use

Critical lift operators are trained in the specific hazards and special procedures associated with the lift. Emergency procedures are addressed for contingency actions.

Critical 1R Item 7 – Final Upper Limit Switch

Number	Contents
1	Item Identification: Final Limit Switch (Whisker), Crane 7-8: 2-Ton P&H.
2	Criticality Category: 1R
3	Function: All hoisting motion is precluded after the limit switch is encountered.
4	Failure Mode: a) Fails Open b) Fails Closed
5	Cause: a) Corroded Contacts b) Contacts fused together
6	Failure Mode Number: N/A
7	Failure Effect: a) Hoist unable to operate b) Hook block does not stop at limit switch. Two-blocking occurs.

The scenario leading to the creditable effects follows:

- All crane motion is precluded after the limit switch is encountered. Crane is designed to be fail-safe at a power outage.
- Movement of the load will require that power be reset at the final upper limit switch level.
- Two-blocking occurs in the event of final upper limit switch failure.
- Hazardous suspended load conditions may result.
- Inspection would be performed to determine the cause of limit switch failure. Repair may be required.

8 Rationale for Acceptability:

Rationale for acceptance includes the following items.

A. Design

Unlike redundancy is the design feature that minimizes the probability of loss of the load due to contact failure. Redundancy is "unlike" in that non-identical hardware items, e.g., initial and final upper limit switches, perform the same function.

B. Test

Limit switch adjustment and test was performed post retrofit in accordance with Reference 7.

Periodic testing is performed annually for recertification of the Crane 7-8 limit switches. Limit switch trip is checked for attachment, position, alignment, and effectiveness.

C. Inspections

Checkout and verification of each limit switch is performed annually during formal Periodic Inspection. Details of the periodic limit switch testing are documented in ManTech Procedure 25-05-054-5, "Inspection and Preventative Maintenance Procedure for Certification of Monorail Crane 7-8, Vibration Test Cell 032."

Daily inspections, performed by the certified operator, do not include verification of the functional operation of the final upper limit switch.

D. Failure History

Loss of load due to limit switch malfunction has not been experienced since the inception of the RECERT Program.

E. Operational Use

Critical lift operators are trained in the specific hazards and special procedures associated with the lift. Emergency procedures are addressed for contingency actions.

Critical Item 8 – Yoke Assembly

Item No.	Contents
1	Item Identification: Yoke Assembly, Crane 7-8, 2-Ton P&H, Reference Item 23-26, Figure 45, Reference 1
2	Criticality Category: 1
3	Function: Connects hoist/load to the monorail.
4	Failure Mode: Structural failure of component
5	Cause: Excessive load. Requires multiple component failure.
6	Failure Mode Number: N/A
7	Failure Effect: Potential loss of critical hardware/personnel
8	Rationale for acceptance includes the following items:

A. Design

The structural design of the trolley/yoke components meets the requirements of ANSI and CMAA to meet the specified load combinations and allowable stresses.

B. Test

Specific tests to detect failure modes and causes to achieve certification were performed, i.e.:

- Factory Tests Before Shipment
- Crane Acceptance Test Procedures
- Rated load and operational tests performed annually for critical cranes.

Written, dated, and signed test reports are documented after each test. The reports are available upon request from the RECERT Manager.

C. Inspections

Cranes are inspected annually for deformed, cracked, or corroded members, welds, and loose bolts in the crane structure. Various methods of nondestructive examination are used as required.

D. Failure History

Loss of load due to loss of the Yoke Assembly has not been experienced since the inception of the RECERT Program.

E. Operational Use

Critical lift operators are trained in the specific hazards and special procedures associated with the lift. Emergency procedures are addressed for contingency actions or other emergencies.

2.6 Criticality Category 1R Items

The FMEA is a single failure point analysis and does not address multiple failures with the following clarification:

> The combined effect of failure of two like and/or unlike redundant items that could result in loss of life/load will be evaluated.

These items are classified as criticality category 1R items. Redundancy screens must be addressed for all Criticality Category 1R items. Determination of "Pass," "Fail," or "N/A" (not applicable) must be documented in the summary list of 1R items. The GSE redundancy screens are defined as follows:

Screen A - The redundant item is capable of being checked and verified during normal ground operations.
Screen B - Loss of the redundant item is readily detectible by the ground crew. (This screen is not applicable to standby redundancy.)
Screen C - Loss of all redundant items cannot result from a single credible cause, such as contamination.

Accordingly, the following items are identified herein as category 1R items. These items are identified as critical items in accordance with Reference 2. A critical item is defined as any one of the following:

1. A Criticality 1, 1S, or 2 Single Failure Point
2. A redundant hardware item where the second failure results in loss of life or load and the item is not capable of checkout during normal ground operations (i.e., a single fault tolerant item which fails Redundancy Screen A).

The 1R items are addressed on the following redundancy screen summary.

CRITICALITY CATEGORY 1R REDUNDANCY SCREENS					
Crane: Crane 7-8, Room 032, Vibration Lab Location: Building 7					Prepared By: M Crompton Date: September 2002
PART NAME	FAILURE MODE	FAILURE EFFECT ON SYSTEM PERFORMANCE	REDUNDANCY SCREENS		TEST AND INSPECTION REQUIREMENTS FOR RISK CONTROL AND MITIGATION
			Pass	Fail	
Motor Brake	Loss of electrical power	Unable to operate. Brakes will set.	A, C	B	Requirement for annual, monthly inspection, and daily validation of the brakes in accordance with NASA-STD-8719.9.
	Does not release	Loss of function.			
Mechanical Load Brake	Fails to operate	Motor brake engages. Cease operation.	A, C	B	Requirement for annual, monthly inspection, and daily validation of the brakes in accordance with NASA-STD-8719.9.
	Fails to operatee.	Motor brake engages. Load cannot be raised or lowered. Cease operation.			
Initial Upper Limit Switch	Limits the upward movement of the hook block.		A, C	B	Requirements for annual, monthly inspection, and daily validation of the limit switch in accordance with NASA-STD-8719.9.
	Fails open/corroded contacts.	No up motion.			
	Fails closed/contacts fused together.	Hoist continues "up" motion.			
Final Upper Limit Switch	Fails open/contacts corroded.	No up motion.	C	A, B	Requirements for annual operational test of the final upper limit switch, including manual verification that all hoist motion is precluded.
	Fails closed/contacts fused,	Two blocks. Shuts down crane.			

3.0 Risk Assessment

The following risk assessment evaluation was performed in accordance with Reference 6, NPG 8715.3. A Risk Assessment Matrix is included, see Figure 5. The severity and probability estimates for each of the critical items are documented. The controls are considered to be in place to achieve minimum residual risk.

Definitions for Risk Severity Class and Probability Estimate follow.

Risk Severity Class:

Severity is an assessment of the worst potential consequence, defined by degree of injury or property damage, which could occur. The severity classifications are defined as follows:

Class I – Catastrophic – A condition that may cause death or permanently disabling injury, facility destruction on the ground, or loss of crew, major systems, or vehicle during the mission.

Class II – Critical – A condition that may cause severe injury or occupational illness, or major property damage to facilities, systems, equipment, and flight hardware.

Class III – Moderate – A condition that may cause minor injury or occupational illness, or minor property damage to facilities, systems, equipment, or flight hardware.

Class IV – Negligible – A condition that could cause the need for minor first aid treatment though would not adversely affect personnel safety or health. A condition that subjects facilities, equipment, or flight hardware to more than normal wear and tear.

Probability Estimate:

Probability is the likelihood that an identified hazard will result in a mishap, based on an assessment of such factors as location, exposure in terms of cycles or hours of operation, and affected population. The qualitative risk assessment method utilized herein uses the likelihood of occurrence, probability, definitions listed below.

A – Likely to occur immediately
B – Probably will occur in time
C – May occur in time
D – Unlikely to occur
E – Improbable to occur

The risk matrix is completed by documenting each hazard cause severity and likelihood of occurrence in the appropriate risk assessment code block.

	Probability Estimate				
Severity Class	**A**	**B**	**C**	**D**	**E**
I	**1**	**1**	**2**	**3**	**4**
II	**1**	**2**	**3**	**4**	**5***
III	**2**	**3**	**4**	**5**	**6**
IV	**3**	**4**	**5**	**6**	**7**

Figure 5 – Crane 7-8 Risk Assessment Code Matrix

Critical Items (Figure 5 continued)

Critical Item	Severity Class	Probability	RAC No.
1. Drum Gear*	Critical (II)	Improbable(E)	5
2. Intermediate Gear*	Critical (II)	Improbable(E)	5
3. Motor Pinion*	Critical (II)	Improbable(E)	5
4. Mechanical Load Brake *	Critical (II)	Improbable(E)	5
5. Hoist Motor Brake*	Critical (II)	Improbable(E)	5
6. Initial Upper Limit Switch*	Critical (II)	Improbable(E)	5
7. Final Upper Limit Switch*	Critical (II)	Improbable(E)	5
8. Yoke Assembly*	Critical (II)	Improbable(E)	5

It is noted that the effectiveness of the in place controls and verifications is demonstrated by the fact that lifting device failure has not been a contributing root cause since the inception of the lifting device certification program in 1985.

4.0 Controls And Verifications

Implement/Verify Controls

Crane Operator Training to Include:

- Emergency procedures/contingency actions; include specific hazards and special procedures.
- Effects of failure once it has occurred.

Tests and Inspections

- Continue to perform Frequent/Periodic Tests and Inspections
- Continue to maintain Test and Inspection Procedures current
- Continue to perform Daily Operational Tests and Inspections

5.0 Rationale For Criticality Category Downgrade

The criticality categorization for the critical items identified herein have been reassessed for credibility and reasonableness on the basis of operational experience with the equipment. The rationale for acceptability of each of these critical items included consideration of the following data elements: Design, Test, Inspection, Failure History, and Operational Use. Controls and verifications are in place to either eliminate the critical item or achieve minimum residual risk. It is therefore recommended that the Criticality Category, for the identified Critical Items, be downgraded from a "1" to a "3".

6.0 Control Logic Analysis

The is no control logic associated with this lifting device.

7.0 End-To-End Analysis

No areas of concern were identified which are the design responsibility of other contractors or NASA centers

8.0 Sneak-Circuit Analysis

There was no sneak circuit analysis performed on this lifting device.

9.0 Recommendations

- Continue to certify the lifting device to reflect operational requirements. Continue to perform maintenance of the critical items per OEM requirements.
- Only certified, trained operators shall be authorized to operate lifting devices.
- Maintain documents/approved test and inspection procedures current.
- Review/update this analysis, as required, to reflect any changes in operation or facility improvements that affect the crane system.

10.0 Conclusion

Based on the above analysis, the risk hazard with control and verifications in place, is assessed to be acceptable/controlled. With a RAC 5, it is concluded that this crane is in compliance with the requirements set forth in NASA-STD-8719.9 for performing critical lift operations.