****
* NSI
*
*Document #44-01-668
****

FAILURE MODES AND EFFECTS ANALYSIS AND OPERATING AND SUPPORT HAZARD ANALYSIS (O&SHA) OF THE 1/2-TON MANUAL LIFTING SYSTEM, F-23-2 LOCATED IN BUILDING F-23 MAGNETIC TEST BUILDING WALLOPS FLIGHT FACILITY

NSI Document No.

44-01-668

January 1997

PREPARED BY: W. T. Hargrove 2/6/97
W. Hargrove, Site Supervisor-WFF Recertification Support, NSI — Date

APPROVED BY: A. G. Zorn 2/13/97
A. Zorn, Manager, Recertification Support, NSI — Date

APPROVED BY: 2/18/97
S. Chan, RECERT Manager, Code 750, NASA/GSFC — Date

RECERT Support
NSI Technology Services Corporation
A Subsidiary of ManTech International Corporation
Goddard Space Flight Center
Greenbelt, Maryland 20771

INTRODUCTION

The original FMEA, 40-01-645, on lifting system F-23-1 was based on a configuration with a manual winch, nylon rope and a block and tackle system with a 5 to 1 mechanical advantage. Also, the original winch had been heat treated several times in order to demagnetize it. As a result, the FMEA raised several areas of concern and recommended that the system be "Red Tagged" out-of-service until such time as a re-design could be affected.

The re-designed system, F-23-2, consists of a manual winch identical to the original winch except it has been demagnetized electrically, kevlar rope and a block and tackle system with a 2 to 1 mechanical advantage.

This updated FMEA supersedes the original FMEA, 40-01-645. All issues raised by the original FMEA have been addressed and closed.

TABLE OF CONTENTS

Page

LIST OF FIGURES iii

LIST OF ABBREVIATIONS AND ACRONYMS iv

SECTION 1 - SUMMARY OF FINDINGS 1

1.1 System Criticality 1

1.2 Mechanical Critical Items 1

1.3 Electrical Critical Items 1

1.4 Critical Flex Hose 1

1.5 Critical Orifices 1

1.6 Critical Filters 1

1.7 Criticality Category 1R Items 1

1.8 Requirements of NSS/GO-1740.9B 2

1.9 Recommendations 2

1.10 Corrective Actions 2

1.11 Critical Control/Monitor Functions 4

1.12 Sneak Circuits Identified 4

SECTION 2 - SYSTEM SUMMARY 4

2.1 Documentation List 4

2.2 System Description 5
2.2.1 Hand Winch 5
2.2.2 Sheave/Synthetic Fiber Rope Subsystem 5
2.2.3 Corrosion Resistant Hoist 6

SECTION 3 - DEFINITIONS AND GROUND RULES 6

3.1 Definitions 6

3.2 Ground Rules 9

SECTION 4 - CRITICALITY ASSESSMENT 10

4.1 Purpose 10

4.2 Criticality Assessment Worksheet 10

SECTION 5 - FAILURE MODES AND EFFECTS ANALYSIS AND CIL . . . 12

5.1 Mechanical FMEA Worksheets and Block Diagrams 12

5.2 Electrical FMEA Worksheets and Block Diagrams 17

5.3 Flex Hose FMEA Worksheets 17

5.4 Orifice FMEA Worksheets 17

5.5 Filter FMEA Worksheets 17

5.6 Requirements of NSS/GO-1740.9B 17
5.6.1 Over-Travel Restraint 17
5.6.2 Safe and Adequate Access 18
5.6.3 Calculated Static Stress 18

5.7 Critical Items List 18
5.7.1 Recommendations for Critical Item Corrective Action 19

5.8 Risk Assessment 26

SECTION 6 - OPERATING AND SUPPORT HAZARD ANALYSIS (O&SHA) . . 29

6.1 Objectives 29

6.2 O&SHA Worksheets 29

6.3 Recommendations 35

SECTION 7 - CONTROL LOGIC ANALYSIS 36

SECTION 8 - EMERGENCY SAFING ANALYSIS 36

SECTION 9 - SNEAK CIRCUIT ANALYSIS 36

Attachments:

1 Wallops Flight Facility, 1 Ton Gantry Hoist and Magnetic Calibration Facility Hoist for PEGASUS Project, Engineering Stress Analysis, NSI Document No. 14-11-431, July 1995

2 Memorandum, 313/Materials Engineering Branch, Subject: Heat Treatment of PEGASUS Test Winch, December 14, 1995

3 Memorandum, 823/Deputy Recert Manager, Subject: Building F-23 Hoist Winch 300% Proof Test

LIST OF FIGURES

Figure	Title	Page
1	Manual Hoist System General Arrangement	13
2	Thern Single-Speed Manual Disc Brake Winch, No. M-4311-PB-SS	14
3	GSFC Recertification Hazard Severity Levels Versus Likelihood of Occurrence for Risk Assessment	29

LIST OF ABBREVIATIONS AND ACRONYMS

AGMA	American Gear Manufacturers Association
CAT	Category
CIL	Critical Items List
CMAA	Crane Manufacturers Association of America, Inc.
CSFP	Critical Single Failure Point
FMEA	Failure Modes and Effects Analysis
GSE	Ground Support Equipment
LDE	Lifting Devices and Equipment
NASA	National Aeronautics and Space Administration
NHB	NASA Handbook
NSTS	National Space Transportation System
O&SHA	Operating and Support Hazard Analysis
REV.	Revision
SAA	System Assurance Analysis
SFP	Single Failure Point
SHA	System Hazard Analysis
WFF	Wallops Flight Facility

SECTION 1 - SUMMARY OF FINDINGS

1.1 System Criticality

The 1/4-ton hand winch and associated lifting system, located in the Magnetic Test Building, F-23, at the Wallops Flight Facility, is assessed as critical due to its direct interface with flight hardware. A failure of the winch could cause loss or damage to flight hardware.

1.2 Mechanical Critical Items

There were four (4) Category 2 Mechanical Critical Items, components of the 1/4-ton Hand Winch, identified in Section 4 of this analysis.

Part Name	Critical Failure Mode	Criticality Category
Automatic Load Brake, Qty. 1	Worn Friction Disc Fails to Engage	2
Ratchet, Qty. 1	Fails to Engage During Lowering	2
Pinion Gear, Qty. 2	Structural Failure Overload	2
Drum Shaft, Qty. 1	Structural Failure Overload	2

1.3 Electrical Critical Items

There are no electrical items associated with the 1/2-ton manual lifting system.

1.4 Critical Flex Hose

There are no flex hoses associated with this equipment.

1.5 Critical Orifices

There are no orifices associated with this equipment.

1.6 Critical Filters

There are no filters associated with this equipment.

1.7 Criticality Category 1R Items

There were no Criticality IR items identified in the critical output functions in Section 4.

1.8 Requirements of NSS/GO-1740.9B

NSTS 22206, Revision D, requires that noncompliance to the requirements of NSS/GO-1740.9B, "NASA Safety Requirement for Lifting Devices and Equipment," be identified in the FMEA. The original FMEA identified four items, all of which have been satisfactorily resolved and will be discussed in detail in Paragraph 5.6 of this addendum. The items are as follows:

Item	NSS/GO-1740.9B Paragraph No.
Over-Travel Restraint	401.f.(7)
Safe and Adequate Access	401.f.(6)
Allowable Stresses	401.e
Suspect Factor of Safety	401.f.(1)

1.9 Recommendations

It is concluded that, based on analysis and testing, this manual lifting system as redesigned and installed, does comply with the requirements of NSS/GO-1740.9B and is suitable for and certified for critical lifts as defined by NSS/GO-1740.9B and GMI 1710.6B. Additional details reinforcing this conclusion are provided herein.

1.10 Corrective Actions

The following is a summary of the corrective actions taken, pertinent to the Thern hand winch, as a result of the original FMEA:

1.10.1 The original winch was red tagged and removed from service.

1.10.2 The system was redesigned and replacement hardware was installed to meet the following requirements:

- Replacement winch and hoist materials were specified based on application in the magnetic calibration facility.
- The ferromagnetic materials in the winch were electrically demagnetized at GSFC without winch disassembly.
- The replacement lifting system meets all applicable requirements of OSHA, ANSI, CMAA and NSS/GO-1740.9B.
- The design load safety factor of 3 based on yield was verified by a 300% proof load test.

- Due to the very small fleet angle, experience has shown that uniform cable winding on the winch drum is the norm. An observant operator can insure that the rope winds uniformly on the drum. All lifting procedures should include precautionary steps to insure uniform winding of rope on winch drum.

- Proper overtravel restraint in accordance with NSS/GO-1740.9B, Paragraph 401.f.(7) is inherent in the design and provided by the breaking strength of the kevlar rope. See Section 5.6.

1.10.3 Design alternatives to implement the hazard elimination and controls identified in the original FMEA were considered and implemented.

1.10.4 This FMEA/O&SHA reflects the lifting system modifications including:

- System description and drawing changes documenting lift system general arrangement.

- The modified system is tagged in accordance with Paragraph 401.b of NSS/GO-1740.9B.

- The modified derated system has been inspected and tested in accordance with Paragraphs 402 and 403 of NSS/GO-1740.9B, respectively.

- The required test and inspection of critical items in accordance with the respective acceptance rationale has been completed or is included in required daily, monthly and annual inspections.

- A reassessment of the active component analysis has been performed.

- A reassessment of items constituting the operational and support hazard concerns has been performed.

- Eliminated 1/2-1/4 in. eye splice located between the central hoist sheave and the corner sheave (FMEA 40-01-645, para.2.2.2 and O&SHA pg.35).

- Replacement of 1/2 in. sheaves (O&SHA, pg.35).

- Replacement of mounting hardware, central pulley support.

- Closure of various hazardous conditions noted in the Operating and Support Hazard Analysis (O&SHA).

1.10.5 Paragraph 405.a of NSS/GO-1740.9B requires that operators be trained in the specific hazards associated with the lifting system. It is recommended that this instruction be incorporated in the in-place LDE operator training, examination, and licensing program.

Recommendations resultant from the performance of the Operating and Support Hazard Analysis (O&SHA) are listed in Paragraph 6.3. Details pertinent to the Analysis are addressed on the O&SHA worksheets.

1.11 Critical Control/Monitor Functions

There are no control/monitor functions associated with this equipment.

1.12 Sneak Circuits Identified

There was no Sneak Circuit Analysis performed for this system.

SECTION 2 - SYSTEM SUMMARY

2.1 Documentation List

The following documents were used in completing this analysis:

Document	Rev.	Title
NSS/GO-1740.9	B	NASA Safety Standard for Lifting Devices and Equipment
NSTS 22206	D	Requirements for Preparation and Approval of Failure Modes and Effects Analysis (FMEA) and Critical Items List (CIL)
NSI Report No. 44-06-355		Appendix I, Periodic Test and Inspection Report for Manually Operated Rope Hoist, July 1994
McMaster-Carr Catalog		Information pertinent to: a) Stainless Steel Disc-Brake Winch and b) Double Braided Nylon Cord

NSI Technology Services Document No. 14-11-431	Engineering Analysis, WALLOPS ISLAND FACILITY, 1 TON GANTRY HOIST and MAGNETIC CALIBRATION FACILITY HOIST for PEGASUS PROJECT, ENGINEERING STRESS ANALYSIS, Document No. 14-11-431, July 1995
National Safety Council	Accident Prevention Manual for Business and Industry
NHB 1700.1(V1-B)	NASA Safety Policy and Requirements Document
RECERT-42-011	A Standard Operating Procedure for Preparation of a Request for a Waiver/Deviation to the Mandatory Requirements of NSS/GO-1740.9B, "NASA Safety Standard for Lifting Devices and Equipment"

2.2 System Description

The 1/2-ton Thern Hand Winch lifting system located in Building F-23 at the Wallops Flight Facility consists of three major subsystems: a hand winch, sheaves/synthetic fiber rope, and a corrosion resistant 1,000 lb. capacity hoist to allow lifting of flight hardware.

2.2.1 Hand Winch

The hand winch consists of a stainless steel, single-speed disk brake unit. Winch features include: a one-piece welded frame, machine cut gearing, permanently lubricated bronze bearings, a one-way ratchet, and an automatic load brake. Additional pertinent specifications follow:

Winch derated multi layer capacity, pounds ----------	500
Gear Ratio ----------	14.7:1
Drum Capacity ----------	60' @ 1/4" Dia.

2.2.2 Sheave/Synthetic Fiber Rope Subsystem

The sheave/synthetic fiber rope subsystem is dual-functional in that the system: 1) supports the payload and; 2) changes the direction of the lead line at the Central Hoist Sheave and at the Corner Sheave. See Figure 1, "Manual Hoist System General Arrangement. The sheave/synthetic fiber rope subsystem connects the 500 lb. capacity hand winch to the 1,000 lb. capacity corrosion resistant hoist.

2.2.3 Corrosion Resistant Hoist

This hoist has a 1,000 lb. capacity and is currently located in Building F-23. The two-part hoist is equipped with brass sheaves, aluminum blocks, 1/4 inch single braid kevlar synthetic fiber rope and swivel on the bottom end. Additional pertinent specifications follow:

Standard Lift	20 feet
Minimum Headroom	12 inches
Rope Diameter	1/4 inch

SECTION 3 - DEFINITIONS AND GROUND RULES

3.1 Definitions

These definitions are necessary to an understanding of the ground rules contained in this document.

Component - A combination of parts, devices, and structures, usually self contained, which perform a distinctive function in the operation of the overall equipment. A "black box" (e.g., transmitter, power supply, cryogenic pump, filter assembly).

Correcting Action - An identification of actions, automatic or manual, which could be taken to mitigate the effect of failure.

Critical Item - A critical item is defined as any one of the following:

1. A Criticality Category 1, 1S, or 2 Single Failure Point.
2. A redundant hardware item where the second failure results in loss of life or flight hardware and the item is not capable of check-out during normal ground operations (i.e., a single fault tolerant item which fails Redundancy Screen A).

Critical Items List (CIL) - The CIL represents an analysis of the hardware design, highlighting those items which do not meet the requirements of the applicable codes and standards.

Critical System - A system is assessed as critical if loss of overall system function or improper performance of a system function could result in loss of life, loss of flight hardware, or major damage to one or more flight hardware systems or facilities.

Criticality - The relative measure of the consequences of a failure mode.

Criticality Categories

Criticality	Potential Effect or Failure
1	Single failure which could result in loss of life or flight hardware.
1R	Two redundant hardware items, which if both failed, could result in loss of life or flight hardware (or loss of a safety or hazard monitoring system.
1S	Single failure in a safety or hazard monitoring system that could cause the system to fail to detect, combat, or operate when needed during the existence of a hazardous condition and could result in loss of life or flight hardware.
2	Single failure which could result in loss (damage) of a flight hardware system or personnel injury.
3	All others.

Criticality Assessment - An analysis of each system function to determine if loss or improper performance of the function could result in loss of life/injury and/or damage to flight hardware or facilities.

Fail Safe - The ability to sustain a failure without causing loss of load or damage to the load. (Includes the capability to safe the lifting device and successfully terminate operations.)

Failure - The inability of a system, subsystem, component, or part to perform its required function within specified limits, under specified conditions for a specified duration.

Failure Effect - The effects documented address worst case.

Failure Mode - A description of the manner in which an item can fail.

Function - The activity or operation that a part, component, or system must perform to accomplish its intended purpose.

Hazard - Existing or potential condition that can result in or contribute to a mishap.

Hazard Report Status -

1. Closed - Corrective action/evaluation has been completed. Requirements have been identified and closed loop control is established. Governing

procedural controls are in place. In case of hazards which document design deficiencies, the modification has been completed, the modified system configuration has been verified, and the certification has been documented.

2. Open - Corrective measurement/procedural hazard controls are not in place, or evaluation is pending.

Interface - The point or area where a relationship exists between two or more parts, systems, programs, persons, or procedures wherein physical and/or functional compatibility is required.

Loss of Lifting Device - Loss of the capability to provide the level of device performance required for normal or emergency operations.

Passive Component - A component that may be necessary to the performance or structural integrity of the system but has no active function.

Redundancy - Multiple ways of performing a function.

1. Operational Redundancy - Redundant elements, all of which are fully energized during the subsystem operating cycle. Operational redundancy includes load sharing redundancy wherein redundant elements are connected in such a manner that, upon failure of one unit, the remaining redundant elements will continue to perform the subsystem function. Switching out the failed element is not required.

2. Standby Redundancy - Redundant hardware items that are nonoperative until they are switched into the subsystem upon failure of the primary items. Switching can be accomplished by either automatic or manual means.

3. Like Redundancy - Identical hardware items performing the same function.

4. Unlike Redundancy - Nonidentical hardware items performing the same function. Safety features which provide protection for specific failure modes are considered as unlike redundancy for that failure mode; i.e., relief valves which provide protection against overpressurization after failure of a regulator.

Safety or Hazard Monitoring System - A system whose function is to detect or combat a hazardous situation which has occurred because of prior failures or events during hazardous operations.

Single Failure Point (SFP) - A single item of hardware, the failure of which could result in loss of life or damage to a flight hardware system.

Variance - Documented and approved permission to perform some act contrary to established requirements.

Waiver - A variance that authorizes departure from a particular safety requirement, where an increased level of risk has been accepted.

3.2 Ground Rules

The analysis shall assess all active components between the load hook and the nearest brake since failure of these components could result in dropping the load. The following ground rules shall be used:

3.2.1 The brake shall be identified as a Single Failure Point, in the event the hoist has only one brake and the criticality shall be assigned based on the worst-case effect of its failure. An eddy current brake shall not be considered capable of holding the load. See Paragraph 5.6.1 reference: manually operated (nonpowered), off-the-shelf OEM type hoists.

3.2.2 For shafts located between the drum and brake, the method of shaft attachment shall be analyzed. The shaft attach points shall be considered passive, in the event that the shaft is welded or physically attached to the drum by a method approved by hoisting standards.

3.2.3 Bearings on drums and shafts shall be analyzed only to determine whether or not the bearings can fail and drop the load.

3.2.4 Gear boxes, speed reducers, and couplings shall be considered Single Failure Points in the event that they are located between the drum and nearest brake.

3.2.5 Redundant items with control circuitry must be analyzed to determine whether or not a single credible failure can affect the controls for both redundant components.

3.2.6 A single limit switch on the trolley or bridge drive shall not be identified as a SFP in the event that there is also an acceptable mechanical stop.

3.2.7 Non-compliance to the requirements of NSS/GO-1740.9, "NASA Safety Standard for Lifting Devices and Equipment," shall be identified in the FMEA.

3.2.8 Passive components will not be analyzed in the FMEA. The current list of passive components includes the hook, load block, wire rope, sheaves,

and rope drum. However, the drum shafts shall be analyzed as to the attachment method.

3.2.9 Manually operated (nonpowered) hoists that are off-the-shelf OEM type are acceptable for critical and noncritical lift applications. They shall comply with applicable ANSI requirements. These hoists need only be equipped with at least one brake as described in industry standards and no limit switches, if proper over-travel restraint is provided.

3.3 Document worst case failure effects for every identified failure mode.

SECTION 4 - CRITICALITY ASSESSMENT

4.1 Purpose

The purpose of a lifting system criticality assessment is to assess each subsystem function to determine if loss or improper performance of the function could result in loss of life and/or load or damage to the lifting system. The assessment is performed without regard to redundancy. System functions are identified as either critical or noncritical.

4.2 Criticality Assessment Worksheet

The 1/2-ton Hand Winch subsystems are assessed on the following Criticality Assessment Summary Sheet.

SYSTEM CRITICALITY ASSESSMENT SUMMARY WORKSHEET

LIFT SYSTEM: 1/4-TON HAND WINCH

LOCATION: MAG.CAL. BLDG. F-23

PREPARED BY: M. CROMPTON

DATE: AUGUST 1995

SUBSYSTEM	FUNCTION	TIME PERIOD	EFFECT OF LOSS/FAILURE	CRITICALITY CATEGORY	NOTE
HAND WINCH MOTION - UP/DOWN	RAISE/LOWER LOAD	PRE/POST TEST LIFTING OPERATIONS	A CATASTROPHIC FAILURE OF THE WINCH SYSTEM COULD CAUSE DAMAGE TO FLIGHT HARDWARE	C	
SHEAVE/CORD	RAISE/LOWER LOAD	PRE/POST TEST LIFTING OPERATIONS	A CATASTROPHIC FAILURE OF THE SHEAVE/CORD SYSTEM COULD CAUSE DAMAGE TO FLIGHT HARDWARE	C	
CORROSION RESISTANT HOIST	RAISE/LOWER LOAD	PRE/POST TEST LIFTING OPERATIONS	A CATASTROPHIC FAILURE OF THE HOIST COULD CAUSE DAMAGE TO FLIGHT HARDWARE	C	
STRUCTURAL SUPPORT	SUPPORTS SHEAVE/CORD SUBSYSTEM	PRE/POST LIFTING OPERATIONS	A CATASTROPHIC FAILURE OF THE HOIST COULD CAUSE DAMAGE TO FLIGHT HARDWARE	C	ASSESSMENT INCLUDED AS PART OF THE SYSTEM HAZARD ANALYSIS

C = Critical
NC = Not Critical

SECTION 5 - FAILURE MODES AND EFFECTS ANALYSIS AND CIL

5.1 Mechanical FMEA Worksheets and Block Diagrams

The mechanical components of the subsystems documented in Section 4 were identified from the documents and diagrams referenced in the Documentation List. An analysis of these components was performed and documented on the following FMEA worksheets. A current list of passive components follows:

Passive Components

- Hook
- Load Block
- Kevlar Synthetic Fiber Rope
- Sheaves
- Drum
- Structural components are not analyzed as part of this analysis. Such items that constitute a safety concern shall be considered in the Operating and Support Hazard Analysis which is included herein.

Figure 1 illustrates the interrelationship of the Manual Hoist System components. Figure 2 illustrates the Thern Single Speed, Manual, Disc Brake Winch.

Note: The drum shaft is nonrotating. The drum is driven via pinion gears Number 1 and 2. See Figure 2. The winch drum rotates on permanently lubricated bronze bearings mounted on the fixed drum shaft.

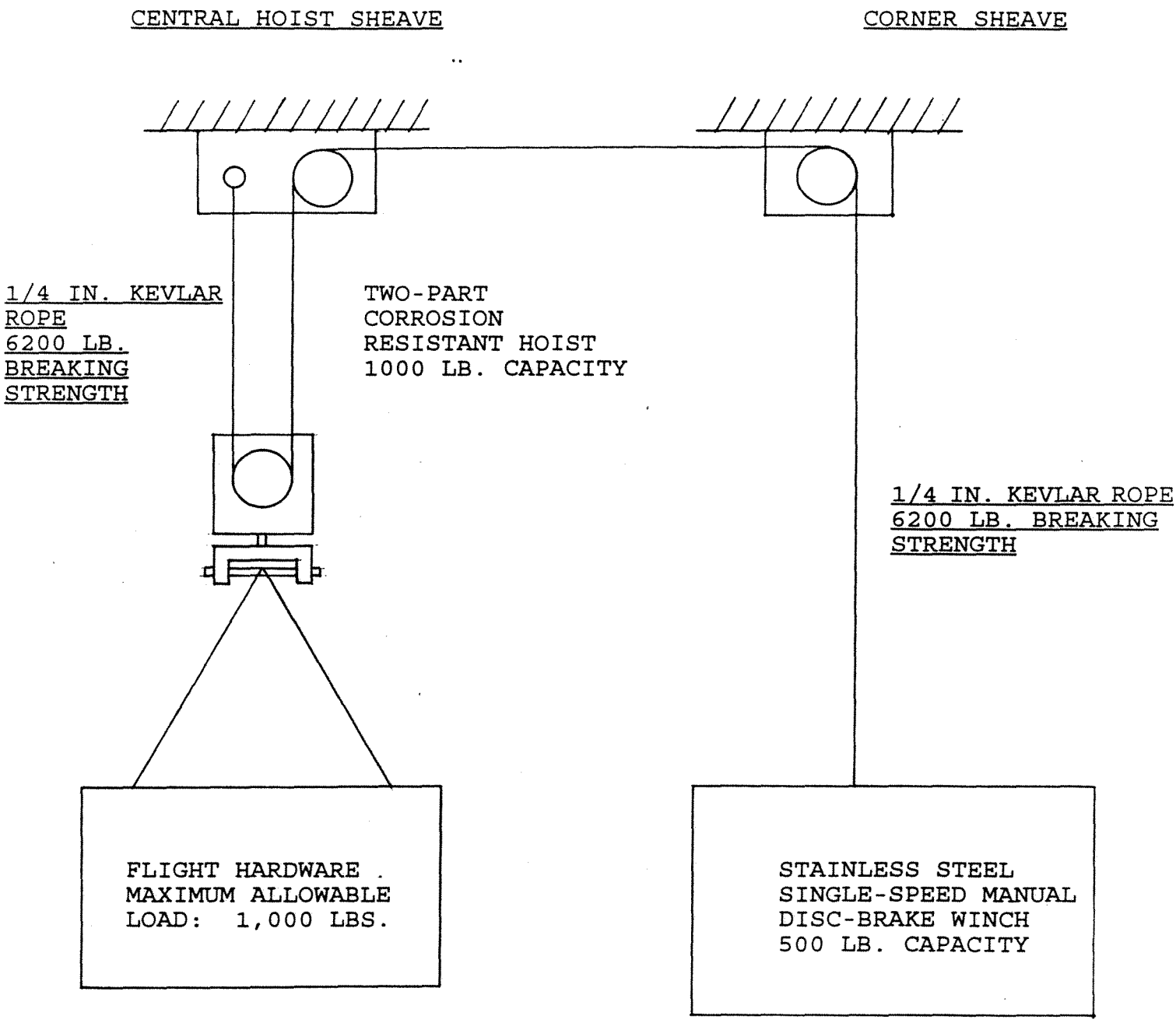

FIGURE 1
MANUAL HOIST SYSTEM
GENERAL ARRANGEMENT

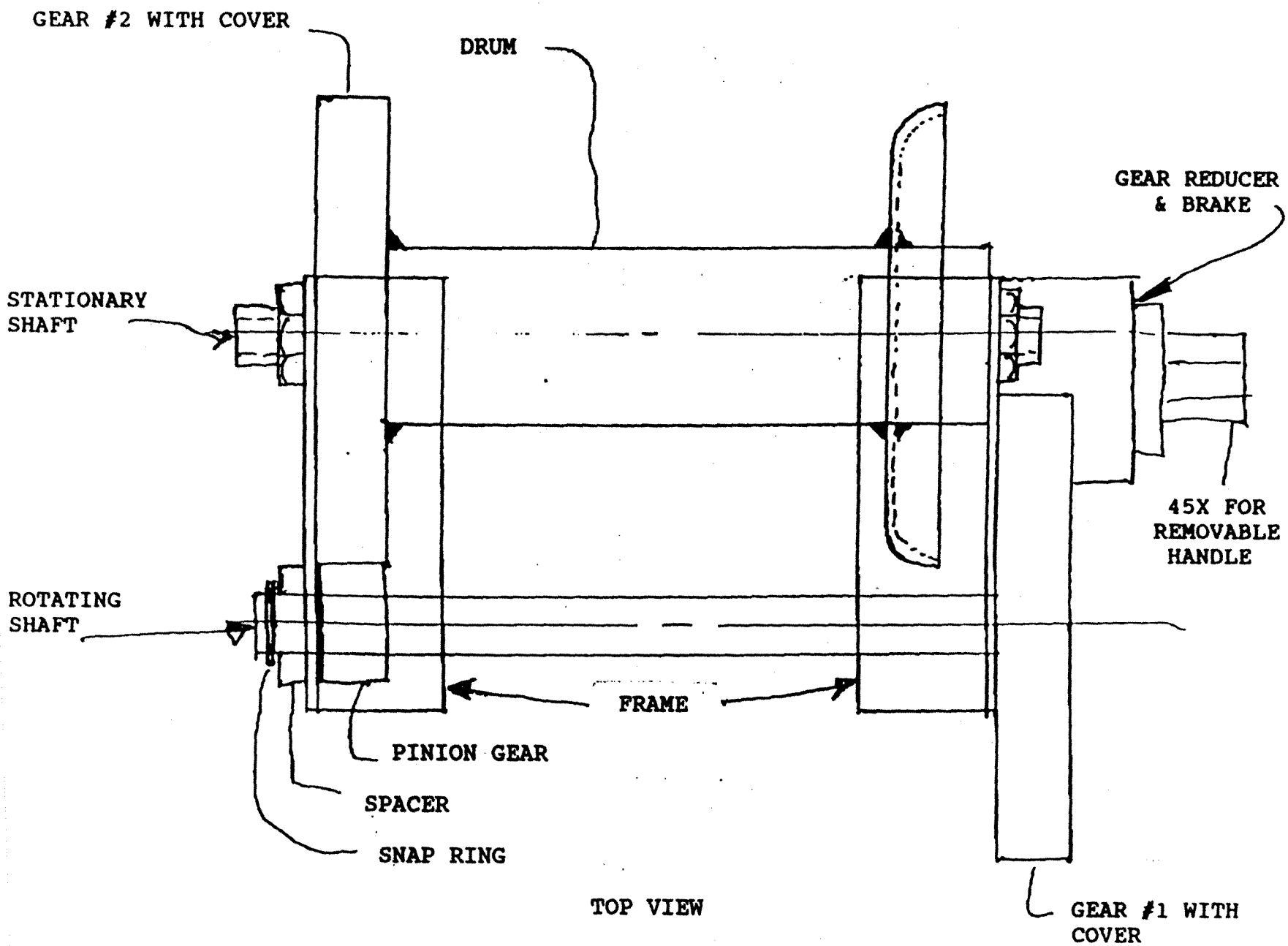

FIGURE 2
THERN SINGLE-SPEED MANUAL DISC BRAKE WINCH
NO. M-4311-PB-SS

FAILURE MODE AND EFFECTS ANALYSIS (FMEA) WORKSHEET

SYSTEM: BUILDING F-23
SUBSYSTEM: 1/4-TON THERN HAND WINCH, M-4311-PB-SS, MECHANICAL, HOIST

DATE: AUGUST 1995
PREPARED BY: M. CROMPTON
D. GAYO

PART NO.	PART NAME	PART FUNCTION	A. FAILURE MODE B. CAUSE C. DETECTION METHOD D. CORRECTING ACTION E. TIME TO EFFECT	FAILURE EFFECT ON SYSTEM PERFORMANCE	FAILURE EFFECT ON CRITICAL HARDWARE AND/OR PERSONNEL SAFETY	CRIT CAT
	GEAR REDUCER	REDUCES ROTATIONAL SPEED FROM CRANK TO DRUM	A. DISENGAGES B. BROKEN TEETH	HOIST SYSTEM INOPERATIVE	DELAY FOR REPAIRS	3
	AUTOMATIC LOAD BRAKE	PROVIDES BREAKING ABILITY TO THE WINCH SYSTEM	A1. FAILS TO ENGAGE B1. WORN FRICTION DISC C. LOAD CREEPS DOWN D. NONE E. IMMEDIATELY	FAILURE OF THE LOAD BRAKE WILL ALLOW THE LOAD TO DROP	LOAD WILL DROP, COULD CAUSE DAMAGE TO FLIGHT HARDWARE	2
		TO ENGAGE PAWL	A2. RATCHET FAILS DURING LOWERING B2. SPRING FAILURE C2. OPERATING NOISE D2. OPERATOR ENGAGES BRAKE RETARDING THE LOAD. E2. SECONDS	OPERATOR WILL REVERSE DRUM ROTATION, I.E. HOISTING, CAUSING THE BRAKE NUT TO ADVANCE ALONG THE SCREW THREAD - COMPRESSING THE FRICTION WASHERS AND DISC, TIGHTENING THE BRAKE AND HOLDING THE LOAD. ABSENCE OF THE OPERATOR, AND THEREFORE, CORRECTIVE ACTION, WOULD ALLOW THE LOAD TO DROP.	LOAD WILL DROP, COULD CAUSE DAMAGE TO FLIGHT HARDWARE	2

FAILURE MODE AND EFFECTS ANALYSIS (FMEA) WORKSHEET

SYSTEM: BUILDING F-23
SUBSYSTEM: 1/4-TON THERN HAND WINCH, M-4311-PB-SS, MECHANICAL, HOIST

DATE: AUGUST 1995
PREPARED BY: M. CROMPTON
D. GAYO

PART NO.	PART NAME	PART FUNCTION	A. FAILURE MODE B. CAUSE C. DETECTION METHOD D. CORRECTING ACTION E. TIME TO EFFECT	FAILURE EFFECT ON SYSTEM PERFORMANCE	FAILURE EFFECT ON CRITICAL HARDWARE AND/OR PERSONNEL SAFETY	CRIT CAT
	PINION GEAR NO. 1	PROVIDES MECHANICAL COUPLING BETWEEN THE HANDLE AND THE ROTATING SHAFT	A1. FAILS STRUCTURALLY B1. OVERLOAD C1. NOISY D1. N.A. E1. IMMEDIATELY	FAILURE OF THE PINION GEAR WILL ALLOW THE LOAD TO DROP.	LOAD WILL DROP, COULD CAUSE DAMAGE TO FLIGHT HARDWARE	2
	PINION GEAR NO. 2	PROVIDES MECHANICAL COUPLING BETWEEN THE ROTATING SHAFT AND DRUM	A2. FAILS STRUCTURALLY B2. OVERLOAD C2. NOISY D2. N.A. E2. IMMEDIATELY	FAILURE OF THE PINION GEAR WILL ALLOW THE LOAD TO DROP.	LOAD WILL DROP, COULD CAUSE DAMAGE TO FLIGHT HARDWARE.	2
	DRUM BEARINGS	REDUCES DRUM TO FIXED SHAFT FRICTION	A. COMPRESSION FAILURE B. OVERLOADING	HOIST SYSTEM INOPERATIVE	DELAY FOR REPAIRS.	3
	DRUM SHAFT	PROVIDES MECHANICAL SUPPORT FOR DRUM ASSEMBLY	A. STRUCTURAL FAILURE B. OVERLOAD C. NOISY D. N.A. E. IMMEDIATELY	FAILURE OF THE DRUM SHAFT WOULD ALLOW THE LOAD TO DROP.	LOAD WILL DROP, COULD CAUSE DAMAGE TO FLIGHT HARDWARE.	2

FAILURE MODE AND EFFECTS ANALYSIS (FMEA) WORKSHEET

SYSTEM: BUILDING F-23 DATE: AUGUST 1995
SUBSYSTEM: 1/4-TON THERN HAND WINCH, M-4311-PB-SS, MECHANICAL, HOIST PREPARED BY: M. CROMPTON D. GAYO

PART NO.	PART NAME	PART FUNCTION	A. FAILURE MODE B. CAUSE C. DETECTION METHOD D. CORRECTING ACTION E. TIME TO EFFECT	FAILURE EFFECT ON SYSTEM PERFORMANCE	FAILURE EFFECT ON CRITICAL HARDWARE AND/OR PERSONNEL SAFETY	CRIT CAT
	GEAR REDUCER	REDUCES ROTATIONAL SPEED FROM CRANK TO DRUM	A. DISENGAGES B. BROKEN TEETH	HOIST SYSTEM INOPERATIVE	DELAY FOR REPAIRS	3
	AUTOMATIC LOAD BRAKE	PROVIDES BREAKING ABILITY TO THE WINCH SYSTEM	A1. FAILS TO ENGAGE B1. WORN FRICTION DISC C. LOAD CREEPS DOWN D. NONE E. IMMEDIATELY	FAILURE OF THE LOAD BRAKE WILL ALLOW THE LOAD TO DROP	LOAD WILL DROP, COULD CAUSE DAMAGE TO FLIGHT HARDWARE	2
		TO ENGAGE PAWL	A2. RATCHET FAILS DURING LOWERING B2. SPRING FAILURE C2. OPERATING NOISE D2. OPERATOR ENGAGES BRAKE RETARDING THE LOAD. E2. SECONDS	OPERATOR WILL REVERSE DRUM ROTATION, I.E. HOISTING, CAUSING THE BRAKE NUT TO ADVANCE ALONG THE SCREW THREAD - COMPRESSING THE FRICTION WASHERS AND DISC, TIGHTENING THE BRAKE AND HOLDING THE LOAD. ABSENCE OF THE OPERATOR, AND THEREFORE, CORRECTIVE ACTION, WOULD ALLOW THE LOAD TO DROP.	LOAD WILL DROP, COULD CAUSE DAMAGE TO FLIGHT HARDWARE	2

FAILURE MODE AND EFFECTS ANALYSIS (FMEA) WORKSHEET

SYSTEM: BUILDING F-23 DATE: AUGUST 1995
SUBSYSTEM: 1/4-TON THERN HAND WINCH, M-4311-PB-SS, MECHANICAL, HOIST PREPARED BY: M. CROMPTON, D. GAYO

PART NO.	PART NAME	PART FUNCTION	A. FAILURE MODE B. CAUSE C. DETECTION METHOD D. CORRECTING ACTION E. TIME TO EFFECT	FAILURE EFFECT ON SYSTEM PERFORMANCE	FAILURE EFFECT ON CRITICAL HARDWARE AND/OR PERSONNEL SAFETY	CRIT CAT
	PINION GEAR NO. 1	PROVIDES MECHANICAL COUPLING BETWEEN THE HANDLE AND THE ROTATING SHAFT	A1. FAILS STRUCTURALLY B1. OVERLOAD C1. NOISY D1. N.A. E1. IMMEDIATELY	FAILURE OF THE PINION GEAR WILL ALLOW THE LOAD TO DROP.	LOAD WILL DROP, COULD CAUSE DAMAGE TO FLIGHT HARDWARE	2
	PINION GEAR NO. 2	PROVIDES MECHANICAL COUPLING BETWEEN THE ROTATING SHAFT AND DRUM	A2. FAILS STRUCTURALLY B2. OVERLOAD C2. NOISY D2. N.A. E2. IMMEDIATELY	FAILURE OF THE PINION GEAR WILL ALLOW THE LOAD TO DROP.	LOAD WILL DROP, COULD CAUSE DAMAGE TO FLIGHT HARDWARE.	2
	DRUM BEARINGS	REDUCES DRUM TO FIXED SHAFT FRICTION	A. COMPRESSION FAILURE B. OVERLOADING	HOIST SYSTEM INOPERATIVE	DELAY FOR REPAIRS.	3
	DRUM SHAFT	PROVIDES MECHANICAL SUPPORT FOR DRUM ASSEMBLY	A. STRUCTURAL FAILURE B. OVERLOAD C. NOISY D. N.A. E. IMMEDIATELY	FAILURE OF THE DRUM SHAFT WOULD ALLOW THE LOAD TO DROP.	LOAD WILL DROP, COULD CAUSE DAMAGE TO FLIGHT HARDWARE.	2

5.2 Electrical FMEA Worksheets and Block Diagrams

There are no electrical functions associated with this equipment.

5.3 Flex Hose FMEA Worksheets

There are no flex hoses associated with this equipment.

5.4 Orifice FMEA Worksheets

There are no orifices associated with this equipment.

5.5 Filter FMEA Worksheets

There are no filters associated with this equipment.

5.6 Requirements of NSS/GO-1740.9B

5.6.1 Over-Travel Restraint

Manually operated (nonpowered), off-the-shelf OEM type hoists are acceptable for critical and noncritical lift operations, in accordance with NSS/GO-1740.9B. The hoists shall comply with applicable ANSI requirements and have at least one brake as described by industry standards. No limit switches are required if proper over-travel restraint is provided.

ANSI B30.16, Overhead Hoists, defines "over-travel restraint" as a device used to prevent the slack load chain from inadvertently being lowered out of the load sprocket. Since this hoist is not a manual chain hoist, we must look at the intent of the requirement and apply that analogously to this hoist. The definition for over-travel restraint for our synthetic fiber rope base mounted drum hoist would be "a device or method used to prevent the load block from being lowered to the point where there would be less than two wraps of rope on the drum."

Over-travel restraint, by this definition, is presently provided by the minimum of two wraps of rope on the drum when the load block reaches the floor, and by the two bolt clamps which secure the end of the rope to the side of the drum.

However, it is recommended that:

a. Critical lift procedures be documented to include special procedures addressing this hazard, and that
b. Critical lift winch operators be trained pertinent to this specific hazard and the aforementioned special procedures.

5.6.2 Safe and Adequate Access

NSS/GO-1740.9, Paragraph 401.f.(6) requires that safe and adequate access to hoist components to inspect, service, repair, or replace equipment shall be provided for during design. The design shall provide for visual and physical accessibility. Access is presently provided by means of an aluminum extension ladder or by means of an electric scissors lift depending on the extent of servicing required. This meets the requirement of NSS/GO-1740.9.

5.6.3 Calculated Static Stress

NSS/GO-1740.9, Paragraph 401.e requires that structural design shall be in accordance with industry standards for allowable stresses. The CMAA requires that load carrying parts shall be designed so that the calculated static stress in the material, based on rated crane capacity, shall not exceed 20 percent of the published average ultimate strength of the material or 33.3 percent of the published average yield strength of the material.

Thern Engineering, the manufacturer of the winch, lists the safety factor design criteria to be 2 times yield or 4 times ultimate. This is based on the original safe working load for the winch of 1,500 lb. The winch has been derated to 500 lb. capacity; and therefore, would have design safety factors of 6 times yield or 12 times ultimate. This is well in excess of the NASA, OSHA and CMAA requirements. To confirm that the winch will meet the required design safety factors, the old winch, the one which had been heat treated and suspected of having reduced strength, was subjected to a 300% proof load test to prove the 3 times yield design safety factor. Following the test, the winch was disassembled and inspected and had no signs of damage or deformation. The inspections included a dimensional analysis and liquid penetrant inspection of all critical load bearing parts. The same inspections were repeated after the load test. These inspections are documented in Attachment 3.

5.7 Critical Items List

There were five critical items identified during this analysis, components of the 1/4-ton Hand Winch, which are summarized on the following Critical Items List. The critical items are defined as Single Failure Points (SFP).

PART NAME	QUANTITY	CRITICALITY
Automatic Load Brake		
a. Friction Disc	1	2
b. Ratchet	1	2
c. Pinion Gears	2	2
d. Drum Shaft	1	2

5.7.1 Recommendations for Critical Item Corrective Action

It was recommended by the original FMEA that the original winch be removed and replaced. This has been accomplished. In turn, it was additionally recommended in the original FMEA that:

- the replacement lifting system be in compliance with the requirements of NSS/GO-1740.9B (for critical lift operations), CMAA, and OSHA including revision of the FMEA and O&SHA as appropriate;

  This has been accomplished.

- the replacement system should be suitable for operations in the Magnetic Calibrations Facility;

  This has been accomplished.

- the replacement system should be free from design deficiencies as indicated in the FMEA and O&SHA;

  This has been accomplished.

- the replacement system should be a manufacturer's standard, commercially available, off-the-shelf unit. A built-up system with components from various manufacturers should be avoided;

  The new system consists of the replacement winch and locally fabricated equipment; and

- acceptance of Critical Items listed in Paragraph 5.7. is contingent on verification of closure of the foregoing corrective actions. These items have now been closed and verified. The technical rationale for accepting the risk of retaining the subject Critical Items is documented on the following Critical Item Sheets.

Critical Item: Automatic Load Brake
Criticality Category: 2

System/Area: 1/4-Ton Thern Hand Winch/Building F-23

Part No.: M-4311-PB-SS

Function: Provides breaking ability to the winch system

Critical Failure Mode: Fails to engage

Failure Cause: Worn friction disc

Failure Effect: Load will drop, could cause damage to flight hardware

ACCEPTANCE RATIONALE

Design:

Winch design complies with applicable ANSI standards.

Test:

- Periodic testing is performed in accordance with "Periodic Test and Inspection Report for Manually Operated Rope Hoist, Hoist No. F23-1."
- Hoist is operated through its entire length of travel prior to each critical lift or once a day if multiple lifts are to be performed. Log books are completed noting any possible problems.
- Manual hoist system, see Figure 1, has been proof load tested to 125% of the Thern Hand Winch re-rated load after installation and prior to use.
- Manual hoist system, see Figure 1, is load tested at 100% Thern Hand Winch re-rated load annually.

Inspection:

- Periodic Inspection is performed in accordance with "Periodic Test and Inspection Report for Manually Operated Rope Hoist, Hoist No. F23-2." This procedure provides specific instructions pertinent to the Critical Items identified in this analysis.
- Daily inspection is performed prior to first use each day the hoist is used, in accordance with the requirements of NSS/GO-1740.9B, "NASA Standard for Lifting Devices and Equipment."

Failure History:

There is no history of load brake failures or unexplained anomalies experienced during hand winch operation.

Operational Use:

Provisions for corrective actions, e.g., redundancy, are not required to circumvent the specified failure once it has occurred.

Manually operated hoists are acceptable for critical lift operations, in accordance with NSS/GO-1740.9B. The hoists shall comply with applicable ANSI requirements and have at least one brake as described by industry standards.

Critical Item: Automatic Load Brake
Criticality Category: 2

System/Area: 1/4-Ton Thern Hand Winch/Building F-23

Part No.: M-4311-PB-SS

Function: Provides breaking ability to the winch system

Critical Failure Mode: Ratchet fails to engage pawl during lowering at which time the brake nut is not advanced to compress the friction washers and disc - thereby holding the load.

Failure Cause: Spring failure

Failure Effect: Load will drop, could cause damage to flight hardware

ACCEPTANCE RATIONALE

Design:

Winch design complies with applicable ANSI standards.

Test:

- Periodic testing is performed in accordance with "Periodic Test and Inspection Report for Manually Operated Rope Hoist, Hoist No. F23-1."
- Hoist is operated through its entire length of travel prior to each critical lift or once a day if multiple lifts are to be performed. Log books are completed noting any possible problems.
- Manual hoist system, see Figure 1, has been proof load tested to 125% of the Thern Hand Winch re-rated load after installation and prior to use.
- Manual hoist system, see Figure 1, is load tested at 100% Thern Hand Winch re-rated load annually.

Inspection:

- Periodic Inspection is performed in accordance with "Periodic Test and Inspection Report for Manually Operated Rope Hoist, Hoist No. F23-2." This procedure provides specific instructions pertinent to the Critical Items identified in this analysis.
- Daily inspection is performed prior to first use each day the hoist is used, in accordance with the requirements of NSS/GO-1740.9B, "NASA Standard for Lifting Devices and Equipment."

Failure History:

There is no history of load brake failures or unexplained anomalies experienced during hand winch operation.

Operational Use:

Provisions for corrective actions, e.g., redundancy, are not in place to circumvent the specified failure once it has occurred.

Manually operated hoists are acceptable for critical lift operations, in accordance with NSS/GO-1740.9B. The hoists shall comply with applicable ANSI requirements and have at least one brake as described by industry standards.

Critical Item: Pinion Gear No. 1 and No. 2
Figure 2: Thern Single-Speed Manual Disc Brake Winch No. M-4311-PB-SS
Criticality Category: 2

System/Area: 1/4-Ton Thern Hand Winch/Building F-23

Part No.: M-4311-PB-SS

Function: Pinion Gear No. 1 - Provides mechanical coupling between the power source, manual, and the rotating shaft. Pinion Gear No. 2 - Provides mechanical coupling between the rotating shaft and the drum.

Critical Failure Mode: Pinion gear compression failure

Failure Cause: Overloading

Failure Effect: Binding and/or noisy operation

NSTS 22206 requires that gear boxes, speed reducers, and couplings shall be considered Single Failure Points if they are located between the drum and the nearest brake.

ACCEPTANCE RATIONALE

Design:

Gearing is designed and manufactured in compliance with the latest AGMA gear standards. Most probable result of overloading would be binding and/or noisy operation.

Test:

- Periodic testing is performed in accordance with "Periodic Test and Inspection Report for Manually Operated Rope Hoist, Hoist No. F23-1."
- Manual hoist system, see Figure 1, has been proof load tested to 125% of the Thern Hand Winch re-rated load after installation and prior to use.
- Manual hoist system, see Figure 1, is load tested at 100% Thern Hand Winch re-rated load annually.

Inspection:

- Periodic Inspection is performed in accordance with "Periodic Test and Inspection Report for Manually Operated Rope Hoist, Hoist No. F23-2." This procedure provides specific instructions pertinent to the Critical Items identified in this analysis.

- Daily inspection is performed prior to first use each day the hoist is used, in accordance with the requirements of NSS/GO-1740.9B, "NASA Standard for Lifting Devices and Equipment."

Failure History:

There is no history of pinion gear failures or unexplained anomalies experienced during hand winch operation.

Operational Use:

Provisions for corrective actions, e.g., redundancy, are not in place to circumvent the specified failure once it has occurred.

Manually operated hoists are acceptable for critical lift operations, in accordance with NSS/GO-1740.9B. The hoists shall comply with applicable ANSI requirements and have at least one brake as described by industry standards.

5.8 Risk Assessment

The following evaluation of risk acceptance was performed in accordance with the criteria of NHB 1700.1(V1-B) and RECERT-42-011. A Risk Assessment Matrix is included. See Figure 3. The Severity and suggested Likelihood of Occurrence for each of the Critical Items is documented. The Controls are considered to be in place to achieve minimum residual risk. Definitions for Risk Severity Level, Likelihood of Risk Occurrence and Risk follow.

Risk Severity Level

Marginal - a hazard that could result in a mishap or minor mishap inflicting first-aid injury to personnel, and/or damage to flight hardware or ground equipment which can be tolerated or repaired without significant program delay.

Critical - a hazard that could result in serious injury to personnel and/or damage to flight hardware or ground equipment which could cause a significant program delay.

Catastrophic - a hazard that could result in a mishap causing fatal injury to personnel and/or loss of one or more major elements of the flight hardware or ground facility.

Likelihood of Risk Occurrence

Probable - expected to happen
Occasional - could happen
Remote - not expected to happen

Unacceptable Risk - Minor Uncertainties Exist. Further action will be required to reduce the risk to an acceptable level.

Acceptable Risk - Minor Uncertainties Exist. The level of risk from the activity is assessed to be sufficiently low to approve the activity.

Acceptable Risk - Uncertainties Controlled/Managed. The in-place controls have significantly reduced the risk level such that hazard occurrence is not expected to happen.

The recommended Controls are summarized below.

- The aforementioned test and inspection procedures, see Section 5.7.2, "Acceptance Rationale," are in place and current.

- Applicable documented procedures provide specific instructions pertinent to the Critical Items identified in this Analysis.

- Proper over-travel restraint is provided.
- A properly certified operator shall control winch operation at all times while a load is suspended.
- Structural equipment design load safety factor: three times yield and five times ultimate.

GSFC RECERTIFICATION
HAZARD SEVERITY LEVELS VERSUS LIKELIHOOD OF OCCURRENCE FOR RISK ASSESSMENT*

		HAZARD* SEVERITY LEVELS		
		MARGINAL (COULD RESULT IN MINOR INJURY OR MINOR FLIGHT HARDWARE DAMAGE)	CRITICAL (COULD RESULT IN SERIOUS INJURY OR SIGNIFICANT FLIGHT HARDWARE DAMAGE)	CATASTROPHIC (COULD RESULT IN FATALITY OR LOSS OF FLIGHT HARDWARE)
LIKELIHOOD	*PROBABLE (EXPECTED TO HAPPEN)*	UNACCEPTABLE RISK (UNCERTAINTIES EXIST)	UNACCEPTABLE RISK (UNCERTAINTIES EXIST)	UNACCEPTABLE RISK (UNCERTAINTIES EXIST)
	OCCASIONAL (COULD HAPPEN)	ACCEPTABLE RISK (MINOR UNCERTAINTIES EXIST)	UNACCEPTABLE RISK (MINOR UNCERTAINTIES EXIST)	UNACCEPTABLE RISK (MINOR UNCERTAINTIES EXIST)
	REMOTE (NOT EXPECTED TO HAPPEN)	ACCEPTABLE RISK (UNCERTAINTIES CONTROLLED/ MANAGED)	ACCEPTABLE RISK (UNCERTAINTIES CONTROLLED/ MANAGED)	ACCEPTABLE RISK (UNCERTAINTIES CONTROLLED/ MANAGED)

* THIS GSFC RECERT RISK ASSESSMENT MATRIX IS A MODIFIED VERSION OF FIGURE G-1, APPENDIX G, IN NHB 1700.1(V1-B), "NASA SAFETY POLICY AND REQUIREMENTS DOCUMENT," JUNE 1993.

FIGURE 3

SECTION 6 - OPERATING AND SUPPORT HAZARD ANALYSIS (O&SHA)

6.1 Objectives

This Operating and Support Hazard Analysis for the 1/2-ton hand winch system at Building F-23, Magnetic Test Building, identifies potential hazards, evaluates their risk level, and provides the mechanism for their elimination and control. Failure of passive components and generic hazards are evaluated. Areas reviewed in this analysis are as follows:

a. Concerns that could cause death/injury to personnel or loss/damage to flight hardware.
b. Design issues that effect normal operation of the lifting system.

This Analysis includes an engineering stress analysis. Reference NSI Document No. 14-11-431 (attached) titled "Wallops Island Facility, 1-Ton Gantry Hoist and Magnetic Calibration Facility Hoist for Pegasus Project, Engineering Stress Analysis, July 1995."

Those conditions found in the Magnetic Test Facility environment - human relationship that could cause potential sources of danger are not part of this analysis. The latter analyses shall be combined, by others, with the analysis herein to develop the Systems Hazard Analysis (SHA).

6.2 O&SHA Worksheets

An analysis of the aforementioned concerns was performed and documented on the following O&SHA worksheets.

OPERATING AND SUPPORT HAZARD ANALYSIS (O&SHA) WORKSHEET

SYSTEM: BUILDING F-23 CATEGORY: CRITICAL APPLICATION PHASE: LIFTING OPERATION DATE: DECEMBER 1995
SUBSYSTEM: 1/2-TON LIFTING DEVICE PREPARED BY: M. CROMPTON
CLOSURE CONCURRENCE: _____ PROJECT MANAGER _____ DEPUTY RECERT MANAGER

HAZARDOUS CONDITION	HAZARD CAUSE	HAZARD EFFECT	SEVERITY	SAFETY REQUIREMENTS	HAZARD ELIMINATION/ CONTROL PROVISIONS	LIKELIHOOD OF OCCURRENCE	STATUS	VERIFICATION METHOD
H1-PAYLOAD COLLIDES WITH 2200-LB. CAPACITY HOIST	OVER-TRAVEL RESTRAINT FAILS	LOSS/DAMAGE OF FLIGHT HARDWARE	CATASTROPHIC	NSS/GO-1740.9B PARA. 401.f.7 REQUIRES A PROPER OVER-TRAVEL RESTRAINT	GMI 1710.6A STATES THAT GSFC REQUIREMENTS ARE IN ACCORDANCE WITH NSS/GO-1740.9B AND NHB 1700.1(V1): LOAD AND OPERATIONAL TESTS SHALL BE PERFORMED BY QUALIFIED PERSONNEL	REMOTE	OPEN	• FMEA: NSI DOCUMENT NO. 44-01-668 • REVIEW PROCEDURES • INSPECTION
H2-PAYLOAD COLLIDES WITH FLOOR	COLLISION DUE TO PASSIVE COMPONENT FAILURE	LOSS (DAMAGE) OF FLIGHT HARDWARE	CATASTROPHIC	DEVELOPED UNDER H3	DEVELOPED UNDER H3	REMOTE	SEE H3	• FMEA: NSI DOCUMENT NO. 44-01-668 • REVIEW PROCEDURES • INSPECTION • ENGINEERING STRESS ANALYSIS DOCUMENT NO. 14-11-431 • EMERGENCY PROCEDURE NO. _____
H2-PAYLOAD COLLIDES WITH FLOOR	COLLISION DUE TO PASSIVE COMPONENT FAILURE	FACILITY DAMAGE	CRITICAL	DEVELOPED UNDER H3	DEVELOPED UNDER H3. • PERFORM STRUCTURAL ANALYSIS OF FLOORING TO EVALUATE IMPACT LOADING INTEGRITY. • NSS/GO-1740.9B, PARA. 206.a.(1) REQUIRES THAT EMERGENCY PROCEDURES BE DEVELOPED FOR CONTINGENCY ACTIONS OR OTHER EMERGENCIES.	REMOTE	OPEN	• FMEA: NSI DOCUMENT NO. 44-01-668 • REVIEW PROCEDURES • INSPECTION • ENGINEERING STRESS ANALYSIS DOCUMENT NO. 14-11-431 • EMERGENCY PROCEDURE NO. _____
		LOSS OF PERSONNEL LOCATED AT BASEMENT LEVEL UNDER SUSPENDED LOAD	CATASTROPHIC	DEVELOPED UNDER H3	• NSS/GO-1740.9B REQUIRES THAT SAFETY ZONES BE ESTABLISHED PRIOR TO INITIATING OPERATIONS. SAFETY ZONES SHOULD HAVE APPROPRIATE BARRIERS ESTABLISHED PRIOR TO LIFT. • NSS/GO-1740.9B, PARA. 206.a.(1) REQUIRES THAT EMERGENCY PROCEDURES BE DEVELOPED FOR CONTINGENCY ACTIONS OR OTHER EMERGENCIES.	REMOTE	OPEN	• FMEA: NSI DOCUMENT NO. 44-01-668 • REVIEW PROCEDURES • INSPECTION • GENERAL OPERATING PROCEDURE NO. _____ • EMERGENCY PROCEDURE NO. _____
MANUFACTURER VOIDS RATED LOAD	DRUM/FRAME HEATED TO CURIE TEMPERATURE	QUESTIONABLE YIELD/ULTIMATE MATERIAL STRENGTH AND FACTOR OF SAFETY.	CATASTROPHIC	• NSS/GO-1740.9B, PARA. 401.f.(1) REQUIRES THAT THE HOIST SHALL MEET ALL APPLICABLE REQUIREMENTS OF OSHA, ANSI, AND CMAA. • PARA. 402.a REQUIRES THAT A PROOF LOAD TEST BE CONDUCTED AS CLOSE AS POSSIBLE TO, BUT NOT EXCEEDING 125% OF THE RATED LOAD. • CMAA SPECIFICATION NO. 74 REQUIRES THAT THE CALCULATED STATIC STRESS NOT EXCEED 20% OF THE PUBLISHED AVERAGE ULTIMATE STRENGTH OF THE MATERIAL.	• GMI 1710.6A STATES THAT GSFC REQUIREMENTS ARE IN ACCORDANCE WITH NSS/GO-1740.9B AND NHB 1700.1(V1). PROOF LOAD AND OPERATIONAL TESTS SHALL BE PERFORMED BY QUALIFIED PERSONNEL. • RECOMMENDATIONS FOR CORRECTIVE ACTIONS ARE COMPLETE. • ADEQUATE MARGIN OF SAFETY HAS BEEN VERIFIED. • PROCEDURES VERIFY LOADS LIFTED ARE EQUAL TO OR LESS THAN RATED CAPACITY. • CAPACITY POSTED ON WINCH. • PERIODIC AND FREQUENT INSPECTIONS VERIFY NO DEGRADATION OF COMPONENTS THAT MAY REDUCE THE RATED CAPACITY.	REMOTE	CLOSED	•FMEA: NSI DOCUMENT NO. 44-01-668 • REVIEW PROCEDURES • INSPECTION • MEMORANDUM, SUBJECT: HEAT TREATMENT OF PEGASUS TEST WINCH, 313/MATERIALS ENGINEERING BRANCH, DECEMBER 14, 1995 •300% PROOF LOAD TEST REPORT DECEMBER 2, 1996

OPERATING AND SUPPORT HAZARD ANALYSIS (O&SHA) WORKSHEET

SYSTEM: BUILDING F-23 CATEGORY: CRITICAL APPLICATION PHASE: LIFTING OPERATION DATE: DECEMBER 1995
SUBSYSTEM: 1/2-TON LIFTING DEVICE PREPARED BY: M. CROMPTON
CLOSURE CONCURRENCE: _____ PROJECT MANAGER _____ DEPUTY RECERT MANAGER

HAZARDOUS CONDITION	HAZARD CAUSE	HAZARD EFFECT	SEVERITY	SAFETY REQUIREMENTS	HAZARD ELIMINATION/ CONTROL PROVISIONS	LIKELIHOOD OF OCCURRENCE	STATUS	VERIFICATION METHOD
H3-COLLISION DUE TO PASSIVE COMPONENT FAILURE	HOOK FAILS, ROPE FAILS, ROPE DRUM FAILS, ROPE SHEAVES FAIL, ROPE CLAMP FAILS	LOSS (DAMAGE) OF FLIGHT HARDWARE	CATASTROPHIC	NSS/GO-1740.9, PARA. 403.c.(3) AND PARA. 403.d.(2)(d) REQUIRES DAILY AND MONTHLY INSPECTION OF HOOKS FOR DEFORMATION OR CRACKS. PARA. 403.d(1)(e) REQUIRES THAT HOOK RETAINING MEMBERS REQUIRE ANNUAL INSPECTION FOR DEFORMATION, CRACKS AND NDE, AS REQUIRED. PARA. 403.c.(5) REQUIRES DAILY ROPE INSPECTION FOR DISCREPANCIES. PARA. 403.d(2) REQUIRES MONTHLY INSPECTION OF ROPE FOR DETERIORATION AND DAMAGE. PARA. 403.d.(1) REQUIRES ANNUAL ROPE INSPECTION. PARA. 403.d.(1)(a) REQUIRES PERIODIC INSPECTION FOR CRACKED OR WORN DRUMS. PARA. 403.d.(1)(a) REQUIRES FORMAL PERIODIC INSPECTION FOR CRACKED OR WORN SHEAVES. PARA. 401.f.5 REQUIRES ROPE ENDS TO BE ANCHORED SECURELY BY A CLAMP AND THE DRUM HAVE NO LESS TWO FULL WRAPS WHEN THE HOOK IS AT ITS LOWEST POINT.	GSFC REQUIRES APPROVED, SPECIFIC, TECHNICAL, INSPECTION PROCEDURES FOR LIFTING DEVICES AND EQUIPMENT (LDE) 1. FMEA PERFORMED TO VERIFY ADEQUATE MARGIN OF SAFETY. 2. PROCEDURES VERIFY LOADS LIFTED ARE EQUAL TO OR LESS THAN RATED CAPACITY. 3. CAPACITY POSTED ON WINCH. 4. PERIODIC AND FREQUENT INSPECTIONS VERIFY NO DEGRADATION OF COMPONENTS THAT MAY REDUCE THE RATED CAPACITY. 5. ONLY CERTIFIED OPERATORS/RIGGERS SHALL PERFORM THE OPERATION.	REMOTE	OPEN	• FMEA: NSI DOCUMENT NO. 44-01-668 • REVIEW PROCEDURES S • INSPECTION
AUTOMATIC LOAD BRAKE FAILS TO ENGAGE FAILURE	(1) WORN FRICTION DISC	LOAD WILL DROP, COULD CAUSE DAMAGE TO FLIGHT HARDWARE	CATASTROPHIC	NSS/GO-1740.9B APPROVES THE USE OF MANUALLY OPERATED OEM TYPE HOISTS. THESE HOISTS SHALL HAVE AT LEAST ONE BRAKE.	GSFC REQUIRES APPROVED SPECIFIC TECHNICAL INSPECTION PROCEDURES FOR LIFTING DEVICES AND EQUIPMENT (LDE).	REMOTE	CLOSED	• FMEA: NSI DOCUMENT NO. 44-01-668 • REVIEW PROCEDURES • INSPECTION
	(2) RATCHET FAILS TO ENGAGE PAWL	LOAD WILL DROP, COULD CAUSE DAMAGE TO FLIGHT HARDWARE	CATASTROPHIC	NSS-GO-1740.9B APPROVES THE USE OF MANUALLY OPERATED OEM TYPE HOISTS. THESE HOISTS SHALL HAVE AT LEAST ONE BRAKE.	GSFC REQUIRES APPROVED SPECIFIC, TECHNICAL, INSPECTION PROCEDURES FOR LIFTING DEVICES AND EQUIPMENT (LDE). CHANGE OUT SPRING PER OEM RECOMMENDATION.	OCCASIONAL	OPEN	• FMEA: NSI DOCUMENT NO. 44-01-668 • REVIEW PROCEDURE • INSPECTION
				PARA. 406, NSS/GO-1740.9B REQUIRES THAT OPERATORS BE CERTIFIED TO PERFORM CRITICAL LIFTS AND BE TRAINED IN THE SPECIFIC HAZARDS AND SPECIAL PROCEDURES ASSOCIATED WITH THE LIFT.	SPECIFIC PROCEDURES SHALL REQUIRE THAT AN OPERATOR SHALL BE AT THE HOIST CONTROLS AT ALL TIMES WHILE A LOAD IS SUSPENDED. GSFC REQUIRES THAT INSPECTION, TEST INSPECTION AND MAINTENANCE BE PERFORMED BY QUALIFIED PERSONNEL.		OPEN	REVIEW SPECIFIC WRITTEN, CRITICAL LIFT PROCEDURES

OPERATING AND SUPPORT HAZARD ANALYSIS (O&SHA) WORKSHEET

SYSTEM: BUILDING F-23 CATEGORY: CRITICAL APPLICATION PHASE: LIFTING OPERATION DATE: DECEMBER 1995
SUBSYSTEM: 1/2-TON LIFTING DEVICE PREPARED BY: M. CROMPTON
CLOSURE CONCURRENCE: PROJECT MANAGER DEPUTY RECERT MANAGER

HAZARDOUS CONDITION	HAZARD CAUSE	HAZARD EFFECT	SEVERITY	SAFETY REQUIREMENTS	HAZARD ELIMINATION/ CONTROL PROVISIONS	LIKELIHOOD OF OCCURRENCE	STATUS	VERIFICATION METHOD
	(3) PINION GEAR NO. 1 & 2 FAIL	LOAD WILL DROP, COULD CAUSE DAMAGE TO FLIGHT HARDWARE.	CATASTROPHIC	NSS/GO-1740.9B APPROVES THE USE OF MANUALLY OPERATED OEM TYPE HOISTS. THESE HOISTS SHALL HAVE AT LEAST ONE BRAKE.	GSFC REQUIRES APPROVED SPECIFIC, TECHNICAL, INSPECTION PROCEDURES FOR LIFTING DEVICES AND EQUIPMENT (LDE).	REMOTE	CLOSED	• FMEA: NSI DOCUMENT NO. 44-01-668 • REVIEW PROCEDURE • INSPECTION
					GSFC REQUIRES THAT INSPECTION, TEST INSPECTION AND MAINTENANCE BE PERFORMED BY QUALIFIED PERSONNEL.			
H5-OVERLOADING	STATED CAPACITY IS FIRST LAYER CAPACITY. ACTUAL CAPACITY VARIES LINEARLY FROM 1500-850 LBS. AS A FUNCTION OF NUMBER OF WINDINGS.	LOSS (DAMAGE) OF FLIGHT HARDWARE. CAN REDUCE FULL DRUM LOAD RATING ≈57%.	CATASTROPHIC	NSS/GO-1740.9: • PARA. 406.b.(4) REQUIRES THAT HOISTS SHALL NOT BE LOADED BEYOND RATED LOAD EXCEPT DURING AUTHORIZED TESTS. • PARA. 405.b.(2) REQUIRES CRITICAL LIFT OPERATORS TO BE TRAINED IN THE SPECIFIC HAZARDS AND SPECIAL PROCEDURES ASSOCIATED WITH THE LIFT.	GSFC REQUIRES APPROVED TECHNICAL INSPECTION PROCEDURES FOR LIFTING DEVICES AND EQUIPMENT (LDE). AN LDE OPERATOR TRAINING, EXAMINATION AND LICENSING PROGRAM IS IN PLACE, IN ACCORDANCE WITH NSS/GO-1740.9, PARA. 405.a.	REMOTE	OPEN	• FMEA: NSI DOCUMENT NO. 44-01-668 • REVIEW PROCEDURES • INSPECTION
H6-ROPE BREAKS	WORKING LOAD EXCEEDED/ROPE DETERIORATION	LOSS (DAMAGE) OF FLIGHT HARDWARE/ STORED ENERGY MAKES THE ROPES MOVING ENDS DANGEROUS	CATASTROPHIC	EXERCISE CAUTION WHEN WORKING NYLON LINES AROUND CORNERS.	GSFC REQUIRES APPROVED TECHNICAL, INSPECTION PROCEDURES FOR LIFTING DEVICES AND EQUIPMENT (LDE). PROCEDURES WARN OPERATORS OF THE EXTRA CARE NEEDED WITH NYLON LINES. AN LDE OPERATOR TRAINING, EXAMINATION AND LICENSING PROGRAM IS IN PLACE, IN ACCORDANCE WITH NSS/GO-1740.9B, PARA. 405.a. OPERATORS ARE TRAINED IN THE SPECIFIC HAZARDS ASSOCIATED WITH THE LIFT.	REMOTE	OPEN	• FMEA: NSI DOCUMENT NO. 44-01-668 • REVIEW PROCEDURES • INSPECTION
	WORKING LOAD EXCEEDED AT 1/4 IN. SYNTHETIC CORD. EYE SPLICE EFFICIENCY ASSUMED - 90% DESIGN LOAD SAFETY FACTOR CALCULATED = 12.4	LOSS (DAMAGE) OF FLIGHT HARDWARE	CATASTROPHIC	• NSS/GO-1740.9B, PARA. 805.a.(11) MINIMUM SAFETY FACTOR FOR SYNTHETIC ROPE = 9.	• HOIST CAPACITY DERATED TO 500 LBS. ROPE DESIGN LOAD SAFETY = 12.4. • GSFC REQUIRES APPROVED TECHNICAL INSPECTION PROCEDURES FOR LIFTING DEVICES AND EQUIPMENT (LDE). • NEW RATED LOAD SHALL BE MARKED ON OR NEAR HOISTING UNIT AND THE HAND WINCH AND THIS MARKING SHALL BE CLEARLY VISIBLE FROM FLOOR. • ROPE AND EYE SPLICE TESTED TO FAILURE. FACTORY INSTALLED EYE SPLICE IS STRONGER THAN ROPE.	OCCASIONAL	CLOSED	• FMEA: NSI DOCUMENT NO. 44-01-668 • REVIEW PROCEDURES • INSPECTION

OPERATING AND SUPPORT HAZARD ANALYSIS (O&SHA) WORKSHEET

SYSTEM: BUILDING F-23 CATEGORY: CRITICAL APPLICATION PHASE: LIFTING OPERATION DATE: DECEMBER 1995
SUBSYSTEM: 1/2-TON LIFTING DEVICE PREPARED BY: M. CROMPTON
CLOSURE CONCURRENCE: _____ PROJECT MANAGER _____ DEPUTY RECERT MANAGER

HAZARDOUS CONDITION	HAZARD CAUSE	HAZARD EFFECT	SEVERITY	SAFETY REQUIREMENTS	HAZARD ELIMINATION/ CONTROL PROVISIONS	LIKELIHOOD OF OCCURRENCE	STATUS	VERIFICATION METHOD
H7-ROPE FATIGUE	RESULTING FROM BENDING STRESS UPON SHEAVE, SHORTENING ROPE'S LIFE	LOSS (DAMAGE) OF FLIGHT HARDWARE	CATASTROPHIC	DIAMETER OF SHEAVE + DIAMETER OF ROPE = 8, REFERENCE NATIONAL SAFETY COUNCIL.	• TWO-INCH, OR GREATER, DIAMETER SHEAVE REQUIRED FOR 1/4-INCH SYNTHETIC ROPE. • GSFC REQUIRES APPROVED TECHNICAL INSPECTION PROCEDURES FOR LIFTING DEVICES AND EQUIPMENT (LDE).	REMOTE	CLOSED	• FMEA: NSI DOCUMENT NO. 44-01-668 • REVIEW PROCEDURES • INSPECTION
H8-FALLING HAZARD	LACK OF SAFE AND ADEQUATE ACCESS	LOSS OF PERSONNEL, FLIGHT HARDWARE OR EQUIPMENT	CATASTROPHIC	NSS/GO-1740.9, PARA. 401.f.(6) REQUIRES SAFE AND ADEQUATE ACCESS TO LIFTING DEVICE COMPONENTS TO INSPECT, SERVICE, REPAIR, OR REPLACE EQUIPMENT.	ACCESS SHALL BE PROVIDED FOR DURING DESIGN. THE DESIGN SHALL PROVIDE FOR VISUAL AND PHYSICAL ACCESSIBILITY.	OCCASIONAL	CLOSED	• FMEA: NSI DOCUMENT NO. 44-01-668 • REVIEW PROCEDURES • INSPECTION
H9-UNDER-DESIGNED MOUNTING HARDWARE SWIVEL BOLT CENTRAL CABLE PULLEY SUPPORT	STATIC STRESS EXCEEDS 20 PERCENT OF THE PUBLISHED ULTIMATE STRENGTH OF THE MATERIAL	LOSS OF PERSONNEL, FLIGHT HARDWARE OR EQUIPMENT	CATASTROPHIC	CMAA REQUIRES STRESS LIMITATION TO PROVIDE AN APPROPRIATE MARGIN OF STRENGTH.	DESIGN FOR FACTOR OF SAFETY EQUAL TO 3 TIMES YIELD AND 5 TIMES ULTIMATE.	OCCASIONAL	CLOSED	• FMEA: NSI DOCUMENT NO. 44-01-668 • INSPECTION • ENGINEERING STRESS ANALYSIS, NSI DOCUMENT NO. 14-11-431
H10-CAPACITY REDUCTION	VARIATION IN OVERLAPPING AND ROPE TENSION	CAN REDUCE CAPACITIES 25-30%. LOSS (DAMAGE) OF FLIGHT HARDWARE	CATASTROPHIC	NSS/GO-1740.9B: • PARA. 406.b.(4) REQUIRES THAT HOISTS SHALL NOT BE LOADED BEYOND RATED LOAD, EXCEPT DURING AUTHORIZED TESTS. • PARA. 406 REQUIRES THAT OPERATORS BE CERTIFIED TO PERFORM CRITICAL LIFTS AND BE TRAINED IN THE SPECIFIC HAZARDS AND SPECIAL PROCEDURES ASSOCIATED WITH THE LIFT. • PARA. 406.b.(7) REQUIRES THAT AN OPERATOR SHOULD BE AT THE HOIST CONTROL AT ALL TIMES WHILE A LOAD IS SUSPENDED. OBSERVE MANUFACTURER'S CAUTION: DRUM CAPACITY RATINGS ARE BASED ON UNIFORM CABLE WINDING. VARIATIONS IN OVERLAPPING AND CABLE TENSION CAN REDUCE CAPACITIES 25 TO 30%.	AN LDE OPERATOR TRAINING, EXAMINATION, AND LICENSING PROGRAM IS IN PLACE, IN ACCORDANCE WITH NSS/GO-1740.9B, PARA. 405.a. INSTALL A CABLE GUIDE, AS REQUIRED, TO MAINTAIN UNIFORM REEVING. LIFTING OPERATIONS SHALL BE IN ACCORDANCE WITH THE PRACTICES DEFINED IN PARA. 406 OF NSS/GO-1740.9B.	REMOTE	OPEN	• FMEA: NSI DOCUMENT NO. 44-01-668 • VERIFY LDE OPERATOR CRITICAL LIFT CERTIFICATION. • INSPECT, VERIFY UNIFORM ROPE WINDINGS. • REVIEW CRITICAL LIFT PROCEDURES.

OPERATING AND SUPPORT HAZARD ANALYSIS (O&SHA) WORKSHEET

SYSTEM: BUILDING F-23 CATEGORY: CRITICAL APPLICATION PHASE: LIFTING OPERATION DATE: DECEMBER 1995
SUBSYSTEM: 1/2-TON LIFTING DEVICE PREPARED BY: M. CROMPTON
CLOSURE CONCURRENCE: _____ PROJECT MANAGER _____ DEPUTY RECERT MANAGER

HAZARDOUS CONDITION	HAZARD CAUSE	HAZARD EFFECT	SEVERITY	SAFETY REQUIREMENTS	HAZARD ELIMINATION/ CONTROL PROVISIONS	LIKELIHOOD OF OCCURRENCE	STATUS	VERIFICATION METHOD
H11-NONCOMPLIANCE WITH THE APPLICABLE REQUIREMENTS OF NSS/GO-1740.9B	FACTOR OF SAFETY FOR WINCH AS PURCHASED: 2 TIMES YIELD AND ≥4 TIMES ULTIMATE	LOSS (DAMAGE) OF FLIGHT HARDWARE	CATASTROPHIC	PARA. 401.f.(1) OF NSS/GO-1740.9B REQUIRES THAT HOIST COMPONENTS MEET ALL APPLICABLE REQUIREMENTS OF OSHA, ANSI, AND CMAA.	GMI 1710.6 REQUIRES THAT LIFTING DEVICES SHALL BE DESIGNED, FABRICATED, AND CERTIFIED IN ACCORDANCE WITH APPLICABLE CODES, STANDARDS, AND RECERT PROCEDURES. VERIFY FACTOR OF SAFETY EQUAL TO 3 TIMES YIELD AND 5 TIMES ULTIMATE.	EXISTING	CLOSED	• FMEA/O&SHA: NSI DOCUMENT NO. 44-01-668 •VERIFY LDE CERTIFICATION DOCUMENTATION • 300% PROOF LOAD TEST 12/02/96.

6.3 Recommendations

Recommendations resultant from the performance of the Operating and Support Hazard Analysis (O&SHA) are listed below. Details pertinent to the Analysis are addressed on the O&SHA worksheets.

6.3.1 NSS/GO-1740.9B, Paragraph 206.a.(1) requires that emergency procedures be developed for contingency actions or other emergencies.

- Consider performance of a structural analysis of the flooring to evaluate impact loading integrity. Alternately, include emergency instructions in the critical lift procedure, as required, to secure the basement area under the lift area, in the event of dropping flight hardware.

6.3.2 Review and update specific test and inspection procedures to address lift system design modification, as required.

6.3.3 Document critical lift procedures in accordance with NSS/GO-1740.9B, Paragraph 101.c.(c). It is recommended that the following concerns be addressed:

- Procedures verify loads lifted are equal to or less than the rated load.
- Lifting operations shall be in accordance with the practices defined in Paragraph 406 of NSS/GO-1740.9B.
- Specific procedures shall require that an operator shall be at the hoist controls at all times while a load is suspended.
- Specific procedures shall warn operators of the extra care needed with nylon lines.
- Achieve compliance with NSS/GO-1740.9B. Reference Paragraph 5.6 for details.
- Implement hazard elimination/control procedures. Update the analysis worksheets with the applicable procedure number. Reference Paragraph 5.6.3.
- Address hazards documented in Conditions H6, H7, and H9 of the O&SHA pertinent to the nylon rope, sheaves, and mounting hardware, respectively.

- Document Addendum to NSI Document No. 14-11-431, Engineering Stress Analysis, as required.
- Track corrective actions.
- Maintain deficiency status current herein and document closure date. Document corrective action(s) and provide as an attachment to maintain this analysis current.
- Similarly, update this analysis to include pertinent facility improvements.
- Perform an analysis of the facility environment-human relationship that could cause potential sources of danger. Combine this analysis with the O&SHA, herein, to develop the Systems Hazard Analysis (SHA).
- Obtain the appropriate Closure Concurrence signatures/approval.

SECTION 7 - CONTROL LOGIC ANALYSIS

There are no control/monitor functions associated with this lifting system. No control logic analysis was, therefore, performed.

SECTION 8 - EMERGENCY SAFING ANALYSIS

This system is not controlled by a computer control system. No emergency safing analysis is, therefore, required.

SECTION 9 - SNEAK CIRCUIT ANALYSIS

The methodology for the control of sneak circuits is not implemented in the design of this lifting system. No sneak circuit analysis is, therefore, performed.