****
* **QinetiQ NA** *
* *
*Document # 81-01-776 *
****

FAILURE MODES & EFFECTS ANALYSIS (FMEA) FOR MONORAIL CRANE NO. 7-10 LOCATED IN ROOM 026, BUILDING 7

Document No.

81-01-776

July 2009

PREPARED BY: Julie Thomas 7-7-09
J. Thomas, Project Engineer, Team Analex — Date

APPROVED BY: Warren Thomas 07/08/2009
W. Thomas, Manager, Recertification Function, Team Analex — Date

APPROVED BY: B. Montgomery 7/10/09
Brian Montgomery, RECERT Manager (Acting) Code 540, NASA/GSFC — Date

ANALEX CORPORATION
QinetiQ North America

Recertification Function
Goddard Space Flight Center
Greenbelt, Maryland 20771

Table of Contents

Preface ii
List of Tables iii
List of Figures iii
List of References iii
1.0 Summary of Findings 4
1.1 System Criticality 4
1.2 Mechanical/Electrical Critical Items 4
1.3 Electrical Critical Items 5
1.5 Critical Flex hoses 5
1.6 Critical Orifices 5
1.7 Critical Filters 5
1.8 End-to-End Areas of Concern 5
1.9 Sneak Circuits Identified 5
2.0 Failure Mode and Effects 5
2.1 System Description 5
2.2 System Criticality Assessment 7
2.4 Critical Items List (CIL) 14
2.5 Critical Items Acceptance Rationale 14
Critical Item 3 – Hoist Electrical Motor Brake 20
Critical Item 4 – Hoist Mechanical Load Brake 22
Critical Item 6 –Secondary Limit Switch 25
3.0 Risk Assessment 26
3.1 Risk Assessment Code (RAC) and Closure 27
4.0 Controls and Verifications 27
5.0 End-to-End Analysis 28
6.0 Sneak Circuit Analysis 28
7.0 Recommendations 28
8.0 Conclusion 28

Preface

This document includes the following:

- Critical Items List (CIL)
- Rationale for retaining the Critical Items
- Controls and verifications
- Recommendations

This document is compliant with the general methodology of NSTS 22206, "Requirements for Preparation and Approval of Failure Modes and Effects Analysis and Critical Items List."

List of Tables

Table No.	Title	Page
1	GSE Criticality Category Definitions	4
2	System Criticality Assessment Summary Sheet	12
3	FMEA Worksheet	13
4	Crane 7-10 Risk Assessment Code Matrix	27

List of Figures

Figure No.	Title	Page
1	Crane 7-10	8
2	Gear Train	9
3	Magnetic Brake	10
4	Geared limit Switch	11

List of References

The following documents were used in completing this analysis:

1. NSTS 22206, "Requirements for Preparation and Approval of Failure Modes and Effects Analysis (FMEA) and Critical Items List (CIL)," latest revision

2. NASA-STD-8719.9, "NASA Safety Standard for Lifting Devices and Equipment." latest revision

4. NPR 8715.3C. NASA Safety Manual, latest edition.

5. Failure Modes Effect Analysis; Structural/Mechanical Load Path; Electrical Power and Control Components; Electromotive, March 1999.

6. GPR 8719.1. "Certification and Recertification of Lifting Devices and Equipment", November 2004.

7. "Lifting Device Operator Daily Crane and Hoist Inspection and Limit Switch Test," RECERT-42-001, latest revision.

8. "LO-HED Materials Handling General Instruction and Maintenance Manual

1.0 Summary of Findings

1.1 System Criticality

Crane 7-10 is a two-ton capacity monorail crane. The crane was installed in 1974. The subject crane is used to handle critical flight hardware in support of vibration testing. Crane 7-10 is compliant in all requirements as stipulated in NASA-STD-8719.9 for critical lifts. The crane functions are identified and assessed on the Criticality Summary Sheet (see Section 2.2).

1.2 Mechanical/Electrical Critical Items

The Mechanical Critical Items, identified in this analysis, are summarized below. The Rationale for Acceptability is documented as part of the Critical Items List (see Section 2.3)

No.	Critical Item	Original Criticality	Downgraded Criticality	Risk
1.	Drum Gear	1	3	Controlled
2.	Hoist Gearbox	1	3	Controlled
3.	Hoist Electric Motor Brake	1R	3	Controlled
4.	Hoist Mechanical Load Brake	1R	3	Controlled
5.	Upper Limit Switch	1R	3	Controlled
6.	Geared Limit Switch	1R	3	Controlled

The Criticality Category of the critical items was down graded from the original 1/1R criticality to a "3" due to the implementation of defined and approved operational controls.

GSE Criticality Category Definitions

Criticality	Potential Effect or Failure
1	Single failure, which could result in loss of life or load
1R	Two redundant hardware items, which if both failed, could result in loss of life or load (or loss of a safety or hazard monitoring system)
1S	Single failure in a safety or hazard monitoring system that could cause the system to fail to detect, combat, or operate when needed during the existence of a hazardous condition that could result in loss of life or load.
2	Single failure, which could result in loss (damage) of a load.
3	All others.

Table 1

1.3 Electrical Critical Items

See Table 1, Section 1.2.

1.4 Hazards Identified

Justification for retaining the critical items listed above was based on the data elements provided in Section 2.5. This Rationale included the following information: Design, Test, Inspection, Failure History, and Operational Use. Risk assessment based on the criteria identified in Reference 1, determined the risk acceptable/controlled for the retention of the above critical items.

1.5 Critical Flex hoses

There were no critical flex hoses identified in this lifting device.

1.6 Critical Orifices

There were no critical orifices identified in this lifting device.

1.7 Critical Filters

There were no critical filters identified in this lifting device.

1.8 End-to-End Areas of Concern

No areas of concern were identified which are the design responsibility of other contractors or NASA centers.

1.9 Sneak Circuits Identified

There was no Sneak Circuit Analysis performed for Crane 7-10.

2.0 Failure Mode and Effects

2.1 System Description

General

Crane 7-10, located Building 7, room 026. Standards require that a Frequent Inspection be made every month and a Periodic Inspection be made each year. In addition, since this lifting device is used for critical lifting, a rated load test is included as part of the annual Periodic Inspection. The crane supports the loading, unloading, assembly and handling of critical payloads and space flight hardware. Reference 5 addresses the Failure Modes and Effects Analysis of the structural/mechanical load path, electrical power and control components.

Hoist & Trolley

For Hoist & Trolley details and parts list refer to LO-HED Materials Handling, General Instruction and Maintenance Manual.

Main Hoist

An electromechanical holding brake is mounted on the hoist motor. The secondary brake is a Weston type lowering brake which serves to limit the speed of descent and hold the load in case of failure of the electric brake. Weston type lowering brake exerts positive control over lowering speed, prevents dropping of load in case of electric brake failure, and supplements action of holding brake when motor is stopped. The upper limit switch de-energizes the hoist motor, automatically applying electric motor brake and Weston type lowering brake. The limit switch is actuated by the block contacting a chain, a paddle and a weight.

Hoist Upper Limit Switches

Dual upper limit switches are provided. Initial geared type upper limit switch prevents the block from being accidentally raised too high and inflicting damage to the drum and wire rope. A chain rope limit switch is installed as backup to prevent the lower block from exceeding its upper limits. After the final upper limit switch has been activated, movement of the load will require action (re-setting) at the final upper limit switch level. However, the ability of bridge and trolley movement is not inhibited after the final upper limit switch has been activated.

2.1.3 Controls

The crane pendant station has the following controls: Off-On, Hoist Speed/Low-High, Hoist Raise/Lower, Trolley: East/West: North/South.

Passive Components

Passive components will not be analyzed in the FMEA. The current list of passive components includes the hook, load block, wire rope, sheaves and rope drum. However, the drum and bearing shafts shall be analyzed as to the attachment method and bearings analyzed only to determine if the bearings could fail and drop the load. There requirements are in accordance with Reference 1 (NSTS 22206).

LH and RH Drum Pinion Shaft Bearings	Loss of function
Intermediate Pinion Shaft bearings	Loss of function
Motor Pinion Shaft Bearings	Loss of function
Trolley Wheel Bearings	Impaired function

Bearings

Bearings on drums and shafts were analyzed to determine if bearing failure could result in dropping the load. Impairment of bearing mechanical integrity would be preceded by several events, each of which would provide a warning to the operator, to negate dropping the load, e.g.,

- Mounting tolerances altered to cause interference with the mounting/motor enclosure
- Obvious visible mechanical aberrations due to wear and tear of bearing hardware seen during routine inspections
- The bearing mounting would contain the shaft in the event of bearing failure. Multiple failures would be required prior to this event

Analysis indicated the bearings to be acceptable. No further discussion is provided on these items.

2.2 System Criticality Assessment

The crane functions are identified and assessed on the following Criticality Assessment Summary Sheet.

Table 2: System Criticality Assessment Summary Sheet				
System: 2 Ton Monorail Crane Location: Building 7			Crane No, 7-10 Date: July 2009	
OUTPUT	**FUNCTION**	**EFFECT OF LOSS/FAILURE**	**CRIT CAT**	**NOTES**
Hoist System	Provides ability to lift/lower loads up to 1 ton	Failure of the hoist system could cause severe injury, major damage to property or flight hardware.	CRIT	See FMEA worksheets
Hoist Braking System	Provides ability to bring a rated load to zero speed and hold it (with or without power).	Failure of the hoist braking system could cause severe injury, major damage to property or flight hardware.	CRIT	
Trolley System	Provides ability to move load right or left the width of the bridge	Failure of the trolley system could cause the load to contact facility and/or other flight hardware, severe injury, major damage to property or flight hardware.	CRIT	
Trolley Brake System	Provides ability to stop and hold trolley in required position	Failure of the trolley brake could cause impact with facility structure and/or other flight hardware, severe injury, major damage to property or flight hardware.	CRIT	
Monorail Beam	Provides ability to traverse entire length of the beam	Failure of the monorail beam could cause flight hardware to contact facility structure and/or other flight hardware, severe injury, major damage to property or flight hardware	CRIT	

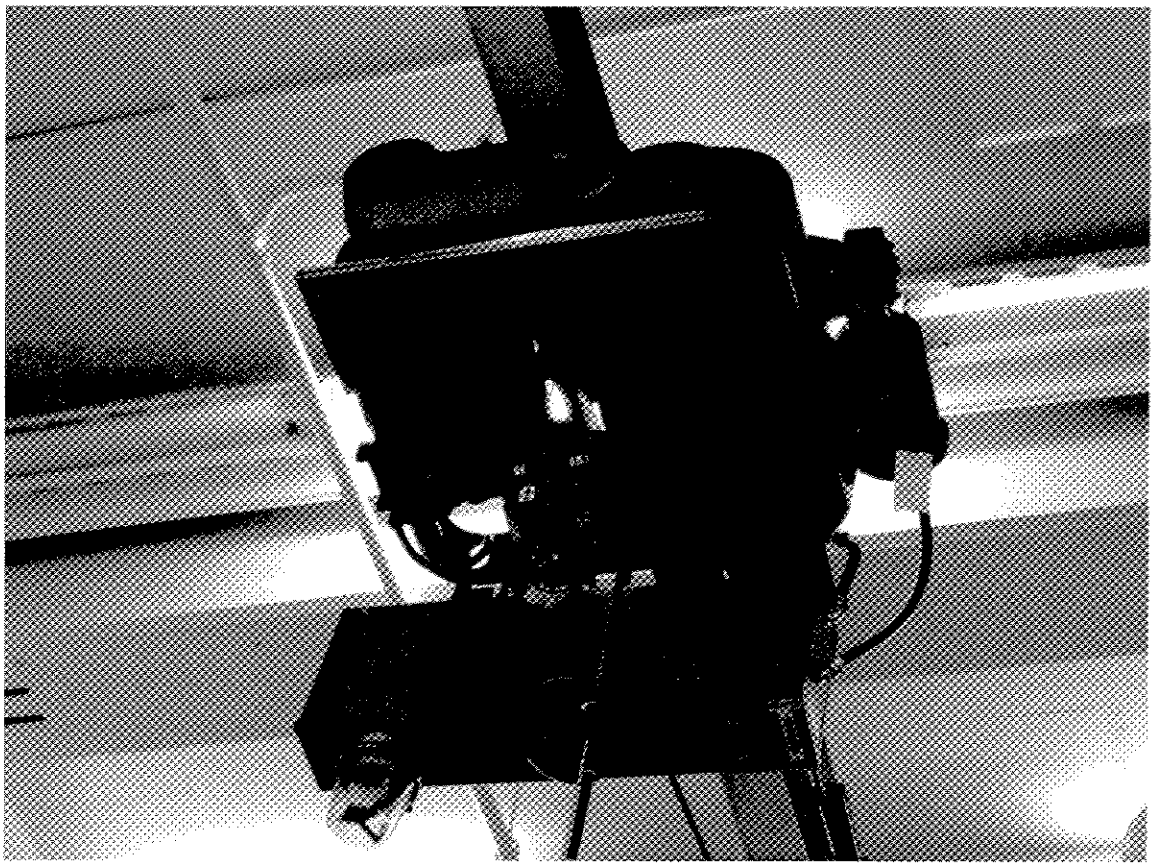

Crane 7-10 LO-HED Monorail Class B2-20
Fig. 1

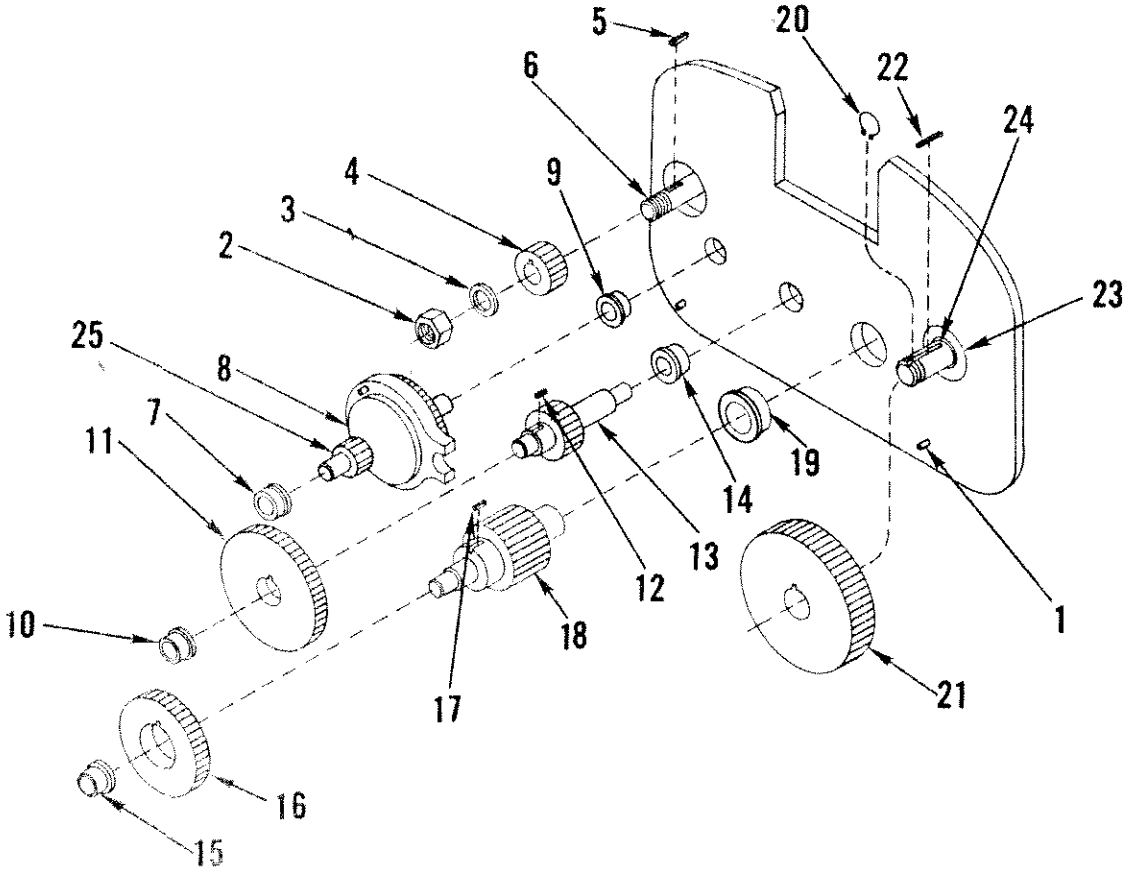

1 Alignment pin
2 Motor pinion nut
3 Motor pinion washer
4 Motor pinion
5 Motor shaft key
6 Motor shaft*
7 Ball bearing
8 Mechanical lowering brake assembly
9 Ball bearing
10 Ball bearing
11 1st intermediate gear
12 Key
13 1st intermediate shaft and 2nd intermediate pinion
14 Ball bearing
15 Ball bearing
16 2nd intermediate gear
17 Key
18 2nd intermediate shaft and drum pinion
19 Ball bearing
20 Retaining ring
21 Drum gear
22 Key
23 Ball bearing
24 Drum shaft*
25 1st Intermediate Pinion

Gear Train
Fig. 2

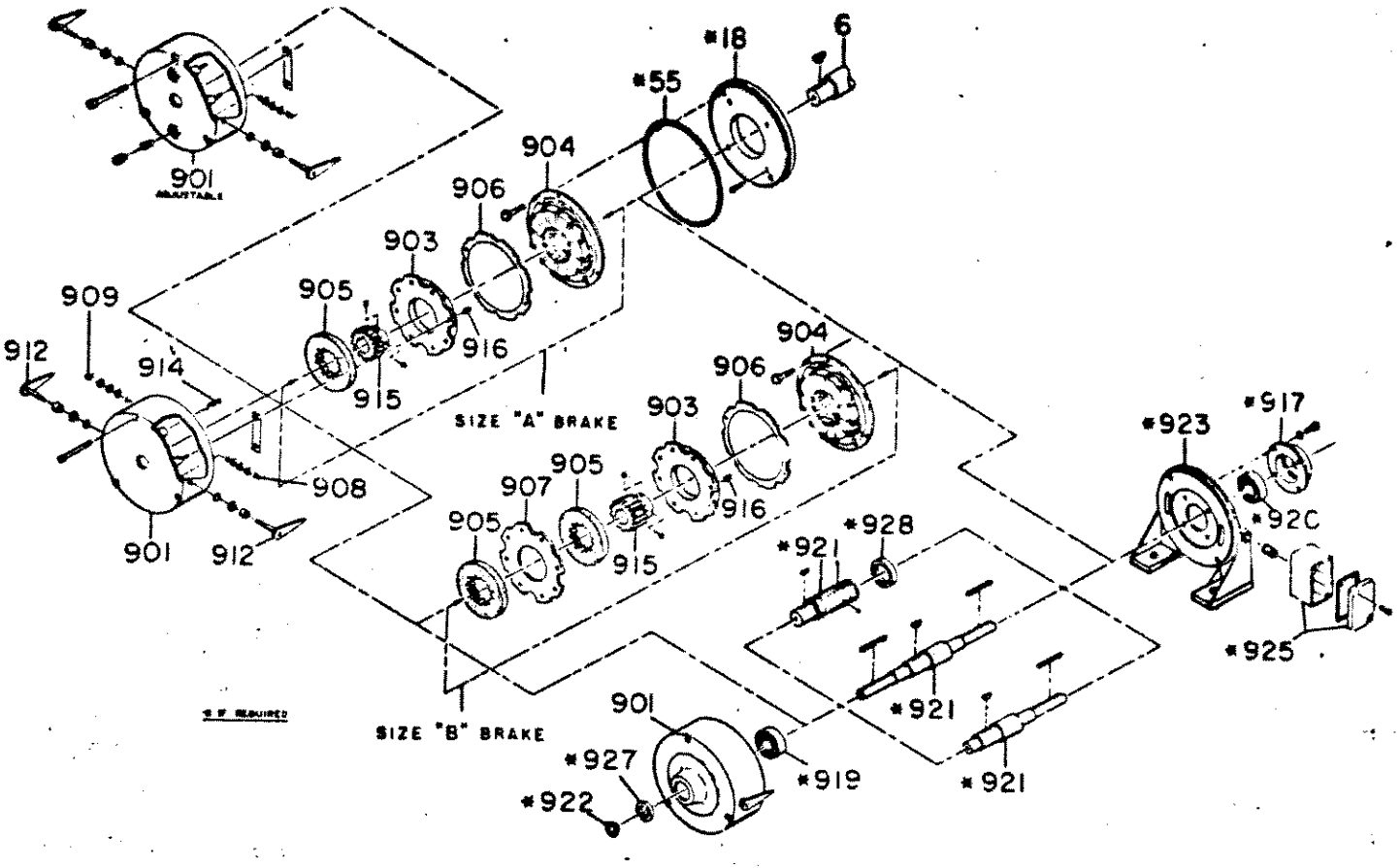

PARTS ILLUSTRATION

MAGNETIC BRAKE

RENEWAL PARTS LIST

Item	Part Name	Item	Part Name
6	MOTOR SHAFT	919	BEARING
18	FRONT ADAPTOR	920	BEARING
55	BRAKE GASKET	921	BRAKE SHAFT
901	BRAKE HOUSING	922	END BELL PLUG
903	ARMATURE ASSEMBLY	923	FOOT MOUNTING ADAPTER
904	STATOR ASSEMBLY	925	TERMINAL BOX
905	BRAKE DISC	927	SEAL
906	COMPRESSION PLATE	928	SEAL
907	BRAKING PLATE		
908	RELEASE SPRING, L.H.		
909	RELEASE SPRING, R.H.		
912	RELEASE ASSEMBLY		
914	GUIDE PIN		
915	BRAKE HUB		
916	COMPRESSION SPRING		
917	BEARING CLOSURE		

Magnetic Brake
Fig. 3

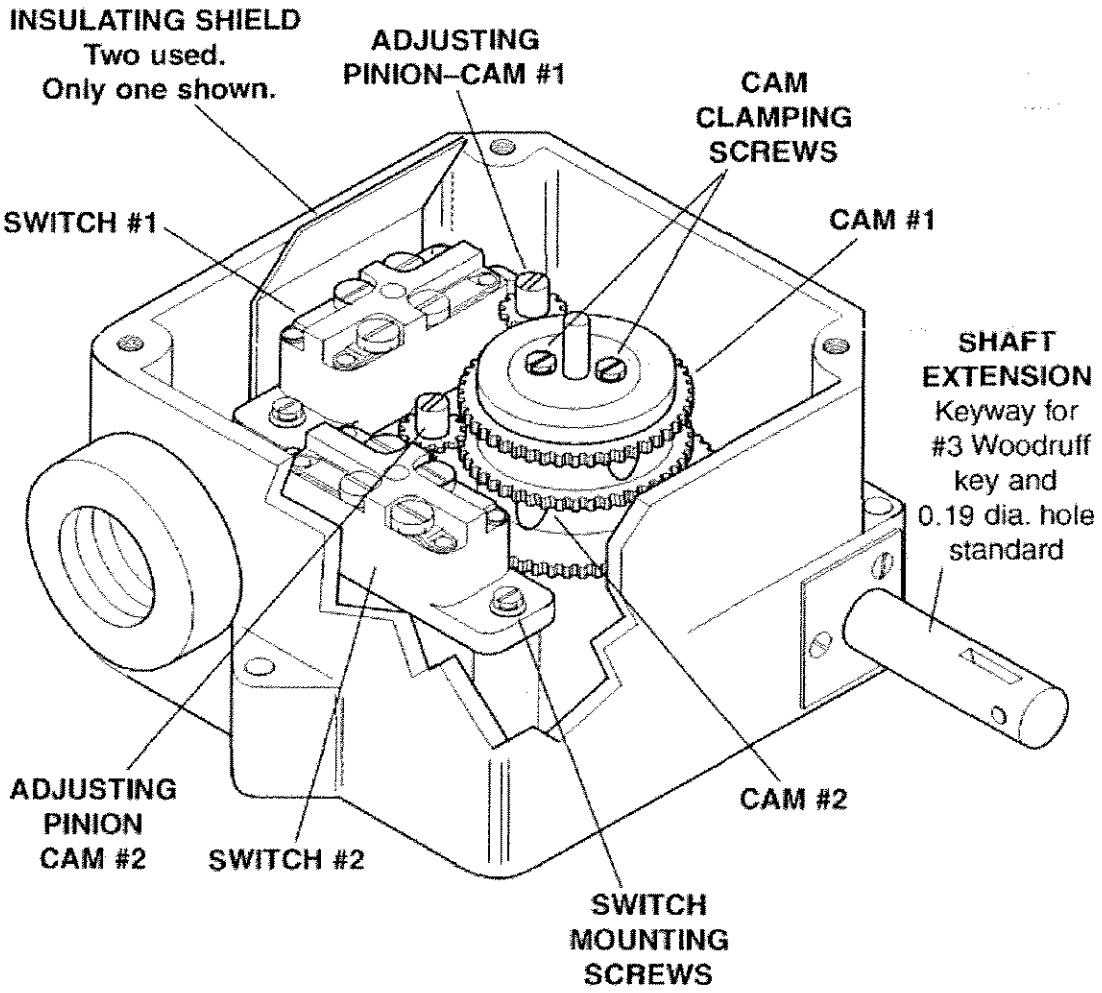

Geared Limit Switch
Fig. 3

2.3 Failure Modes And Effects Analysis And Critical Items List

Mechanical FMEA Worksheets
The mechanical components of this equipment are identified from the documents and diagrams referenced in the Documentation list and are analyzed on the following FMEA worksheets.

FAILURE MODE AND EFFECTS ANALYSIS (FMEA) WORKSHEET

System: 2 Ton Monorail Crane — Crane No, 7-10
Subsystem: Drum Assembly/Hoist Gearbox — Date: July 2009

PART NAME	PART FUNCTION	FAILURE MODE AND CAUSE	FAILURE EFFECT ON SYSTEM PERFORMANCE	FAILURE EFFECT ON CRITICAL HARDWARE AND/OR PERSONNEL SAFETY	CRIT CAT
Drum Gear	Transmits lifting torque, gear reduction	Disengages/ Excessive load	Torque for holding load will be lost. Load will drop.	Severe injury, major damage to property and flight hardware.	1
Hoist Gearbox	Transmits power from hoist motor to drum.	Structural failure of components.	Load will drop.	Severe injury, major damage to property and flight hardware.	1
Electro-Mechanical Brake	Stops and holds hoist movement when hoist is not in use	Premature deactivation (structural failure of components	Inadvertent braking, inability to raise and lower crane cargo	No effect. Delay in operation	1R
Motor Brake	Hold load after hoisting or when de-energized.	Fails to engage (structural failure of components)	Brake engages. Load cannot be raised or lowered	No effect. Delay in operation.	1R

FAILURE MODE AND EFFECTS ANALYSIS (FMEA) WORKSHEET

SYSTEM: 2 Ton Monorail Crane — Crane No, 7-10
SUBSYSTEM: Hoist Limit Switches: Electrical — Date: July 2009

PART NAME	PART FUNCTION	FAILURE MODE AND CAUSE	FAILURE EFFECT ON SYSTEM PERFORMANCE	FAILURE EFFECT ON CRITICAL HARDWARE AND/OR PERSONNEL SAFETY	CRIT CAT
Primary limit switch.	Prevents the block from being accidentally raised too high and inflicting damage to the drum and wire rope.	Fails open. Internal parts failure/improper adjustment.	Loss if limiting capability, damage to crane	Delay in operation.	1R
Secondary limit switch	Installed as backup to prevent the lower block from exceeding its upper limits	Fails open. Internal parts failure/improper adjustment	Loss if limiting capability, damage to crane	Delay in operation.	1R

2.4 Critical Items List (CIL)

No.	Critical Item
1	Drum Gear
2	Hoist Gearbox
3	Hoist Electric Motor Brake
4	Hoist Mechanical Load Brake
5	Upper Limit Switch
6	Geared Limit Switch

2.5 Critical Items Acceptance Rationale

The justification for retaining the identified critical items is presented here. The rationale is comprised of the following elements as defined in the critical item sheets which follow:

Critical Item 1- Drum Gear

No.	Contents
1	Item Identification: Drum Gear See Illustration (Fig. 2)
2	Critical Category: 1
3	Function: Transmits lifting torque and provides gear reduction
4	Failure Mode: Gear disengages
5	Cause: Exceeding hoist capacity, wear, excessive torque, poor lubrication
6	Failure Mode Number: N/A
7	Failure Effect: Torque for holding load will be lost. Load will drop. Loss of critical hardware/personnel safety
8	Rationale for acceptance includes the following items

A. Design

The hoist is designed to meet all OSHA requirements cited in OSHA CFR 1910.179 and 1710.306 and CMAA 70 with the exceptions and additions cited in the June 19, 2000 specifications. The drum gear meets the requirements for Class C, "moderate service" and is manufactured to AGMA quality class 5 or better. Gears are smooth running, heat treated, alloy steel, straight line, spur type.

B. Test

Specific tests to detect failure modes and causes during acceptance test and certification tests were performed, i.e.:

- Factory tests before shipment
- Crane acceptance test procedures

For details, reference Critical Items List; Item: Hoist Gearbox

C. Inspections

Inspections are performed to a) detect whether or not critical failure modes have occurred and b) to minimize the probability of occurrence of the failure mode and cause. The following inspections are pertinent to the drum gear.

Daily test is performed by the certified crane operator prior to first use, each day the crane is used. (See RECERT 42-001, latest revision.)

Functional operating and control mechanisms are checked for maladjustments that could interfere with normal operations.

Frequent and Periodic Inspections are performed in accordance with Reference 2 (NASA-STD-8719.9). Periodic inspections are performed annually to identify wear in drum gear parts that are readily accessible without major disassembly beyond an acceptable limit.

D. Failure History

Severe injury, major damage to property and flight hardware resulted from the loss of the hoist drum gear has not been experienced since the inception of the RECERT Program.

E. Operational Use

Critical lift operators are trained not to exceed lifting capacity of crane and in the specific hazards and special procedures associated with the lift. Emergency procedures are addressed for contingency actions or other emergencies.

Critical Item 2 – Hoist Gearbox

No.	Contents
1	Item Identification: Hoist Gearbox See Illustration (Fig. 2)
2	Criticality Category: 1
3	Function: Transmits power from hoist motor to drum.
4	Failure Mode: Gear disengagement
5	Cause: Structural failure of components, excessive wear.
6	Failure Mode Number: N/A
7	Failure Effect: Torque for holding load will be lost. Load will drop.
8	Rationale for acceptance includes the following items.

A. Design

The design features which minimize the probability of occurrence of the critical failure mode and causes are listed here.

- Gear/shaft attachment methods are approved by hoisting standards.
- Gearing is designed/manufactured in accordance with AGMA standards.
- Two drum pinion gears distribute tooth face pressure resulting in a high durability factor and low fatigue.

B. Test

The following tests, reproduced from Reference 3, identify specific tests to detect failure mode and causes during acceptance and certifications tests.

Factory Tests Before Shipment:

Crane installed 1974

Examination

The equipment was examined for compliance with the requirements of the specification. This element of inspection encompassed all visual examinations and dimensional measurements.

Tests After Erection

Acceptance Test Preparation

After the completed job was adjusted, lubricated, and otherwise made ready for operation, it was tested by David Round & Son, Inc.

Crane Acceptance Test Procedures

The site contractor prepared a complete set of hoist acceptance test procedures.

C. Inspection

Inspections are performed to a) detect whether or not critical failure modes have occurred and b) to minimize the probability of occurrence of the failure mode and cause. The following inspections are pertinent to the hoist gearbox.

Daily, functional, operational test and inspection is performed by the certified crane operator prior to first use, each day the crane is used. (See RECERT 42-001, latest revision, Reference 8.)

Functional operating and control mechanisms are checked for maladjustments that could interfere with normal operations.

Frequent and Periodic Inspections are performed in accordance with Reference 9 based on Reference 2 (NASA-STD-8719.9). Periodic Inspections are performed annually to identify wear in brake system parts that are readily accessible without major disassembly beyond an acceptable limit.

D. Failure History

Severe injury, major damage to property and flight hardware resulting from loss of the hoist gearbox has never been experienced since the inception of the RECERT Program.

E. Operational Use

Gear teeth would have to be lost to effectively impair the mechanical integrity of the load path. The certified crane inspector would notice such an abnormal condition during scheduled periodic inspection. Critical lift operators are trained not to exceed lifting capacity of crane and in the specific hazards and special procedures to mitigate the effects of failure once it has occurred.

Critical Item 3 – Hoist Electrical Motor Brake

No.	Contents
1	Item Identification: Hoist Electric Motor Brake
2	Criticality Category: 1R
3	Function: Brings load to zero speed and holds it, with and without power.
4	Failure mode: Fails to engage
5	Cause: Structural failure of components
6	Failure Mode No. N/A
7	Failure Effect: The solenoid assembly is composed of many individual pieces. Loss of any one of these pieces will result in an impaired hoist function. A more likely scenario is the loss of two or more of these individual components, will result in a loss of function (i.e., a brake that will not open and operation will be delayed).
8	Rationale for Acceptability includes the following items:

A. Design

Operational redundancy is the primary design feature that minimizes the probability of loss of the load due to structural component failure. The design provides redundancy wherein redundant elements are connected in such a manner that, upon failure of the one brake, the remaining brake will continue to perform the subsystem function. Manually switching the brake during failure is not required.

B. Test

Periodic testing is performed annually for recertification of Crane 7-10. Testing is performed in accordance with Section 4.3 of NASA-STD-8719.9, (Reference 2). The Operational Test includes a demonstration of the brake's ability to stop and hold a load.

C. Inspections

Checkout and verification of each brake's ability to stop and hold a rated load is performed annually during formal periodic inspection. Periodic brake inspection is performed in accordance with Paragraph 4.4.5 of Reference 6. Daily inspections performed by the certified operator, verifies the functional operation of the applied hoist brakes.

D. Failure History

Loss of load due to loss of holding brakes has not been experienced, since the inception of the RECERT Program.

E. Operational Use

Critical lift operators are trained in the specific hazards and special procedures associated with the Lift. Emergency procedures are addressed for contingency actions such as power loss, brake failure, or other emergencies in lift specific procedures required for critical lifts.

Critical Item 4 – Hoist Mechanical Load Brake

No.	Contents
1	Item Identification: Hoist Mechanical Load Brake, Weston type lowering brake which is actuated by a roller ratchet and serves to limit the speed of descent and hold the load in case of failure of the electric brake.
2	Criticality Category: 1R
3	Function: Hold load after hoisting or when de-energized
4	Failure Mode: a. Fails to engage b. Possible over-speeding of cargo while lowering
5	Cause: a. Structural failure of components b. Wear, Contamination
6	Failure Mode Number: N/A
7	Failure Effect: a. Brake will set b. Load will hold
8	Critical Items List Acceptance Rationale includes the following items:

A. Design

The mechanical load brake controls the lowering speed of the load and prevents the load from dropping due to failure of the electric motor brake. The mechanical load brake consists of an ACME threaded shaft with a fixed flange, a motor gear with an ACME threaded bore, a ratchet with friction linings riveted to each side, and a spring controlled pawl mounted in the gear case. During the raising cycle, the motor gear is driven counterclockwise and the ACME thread causes the motor gear to compress the ratchet between itself and the fixed flange on the shaft. The spring loaded pawl is thrown away from the ratchet and therefore no braking action takes place. During the lowering cycle, the motor is driven clockwise. The load on the hook tends to keep the brake closed. The pawl engages the ratchet and forces the ratchet to slip between the motor gear and flange thereby creating the braking torque.

B. Test

Periodic testing is performed annually for recertification of Crane 7-10. Testing is performed in accordance with Section 4.3 of NASA-STD-8719.9, (Reference 2). The Operational Test includes a demonstration of the brake's ability to stop and hold a load while motor brake disengaged.

C. Inspections

Inspections are performed to a) detect whether or not critical failure modes have occurred and b) to minimize the probability of occurrence of the failure mode and cause. The following inspections are pertinent to the Hoist AC Disc Brake.

Frequent and Periodic Inspections are performed in accordance with Reference 9 based on Reference 2 (NASA-STD-8719.9).

D. Failure History

Severe injury, major damage to property and flight hardware resulting from disc brake failure has not been experienced, since the inception of the RECERT program.

E. Operational Use

Critical Lift Operators are trained not to exceed lifting capacity of the crane and in the specific hazards and special procedures associated with the lift. Emergency procedures are addressed for contingency actions in lift specific procedures required for critical lifts.

Critical Item 5 –Primary Limit Switch

No.	Contents
1	Item Identification: Upper Limit Switch See Illustration (Fig. 3)
2	Criticality Category: 1R
3	Function: Crane movement in the lift/up direction is precluded after the limit switch is encountered. Movement in the "lower" direction is not inhibited.
4	Failure Mode: a. Fails to engage b. Loss of limiting capability
5	Cause: a. Corroded contacts, improper adjustment b. Contacts fused together
6	Failure Mode Number: N/A
7	Failure Effect: a. Hoist will stop and brakes will set
8	Rationale for acceptance includes the following items:

A. Design

This switch prevents the host from lifting the load up too far. It is set to activate after achieving a preset number of rotations.

B. Test

Periodic testing is performed annually for recertification of Crane 7-10. Limit switch/Limit switch trip is checked for attachment, position, alignment and effectiveness.

C. Inspections

Inspections are performed to a) detect whether or not critical failure modes have occurred and b) to minimize the probability of occurrence of the failure mode and cause. The following inspections are pertinent to the limit switch.

Daily test and inspection is performed by the certified crane operator prior to first use each day the crane is used. (See RECERT-42-001, latest revision, Reference 8.) Functional operating and control mechanisms are checked for maladjustments that could interfere with normal operations.

Critical Item 6 –Secondary Limit Switch

No.	Contents
1	Item Identification: Upper Limit Switch
2	Criticality Category: 1R
3	Function: Crane movement in the raise direction is precluded after the limit switch is encountered. Movement in the "lower" direction is not inhibited.
4	Failure Mode: a. Fails to engage b. Loss of limiting capability
5	Cause: a. Improper adjustment b. Piece part failure
6	Failure Mode Number: N/A
7	Failure Effect: a. Hoist will stop and brakes will set
8	Rationale for acceptance includes the following items:

B. Design

The chain rope prevents the host from lifting the load up too far. It is set to activate after block makes contact with the chain.

B. Test

Periodic testing is performed annually for recertification of Crane 7-10. Limit switch/Limit switch trip is checked for attachment, position, alignment and effectiveness.

C. Inspections

Inspections are performed to a) detect whether or not critical failure modes have occurred and b) to minimize the probability of occurrence of the failure mode and cause. The following inspections are pertinent to the limit switch.

Daily test and inspection is performed by the certified crane operator prior to first use each day the crane is used. (See RECERT-42-001, latest revision, Reference 8.) Functional operating and control mechanisms are checked for maladjustments that could interfere with normal operations.

3.0 Risk Assessment

The following risk assessment evaluation was performed with the following risk assessment Matrix included. See Figure 1. The severity, Probability Estimates and Risk Assessment Code (RAC) Number for each of the Critical Items is documented. The Controls are considered to be in place to achieve minimum residual risk. Definitions for risk Severity class and Probability Estimate follow.

Risk Severity Class:

Severity is an assessment of the worst potential consequence, defined by degree of injury or property damage, which would occur. The severity classifications are defined as follows:

Class I – Catastrophic – A condition that may cause death or permanently disabling injury, facility destruction on the ground, or loss of crew, major systems, or vehicle during the mission.

Class II – Critical – A condition that may cause severe injury or occupational illness, or major property damage to facilities, systems, equipment, or flight hardware.

Class III – Moderate – A condition that may cause minor injury or occupational illness, or minor property damage to facilities, systems, equipment or flight hardware.

Class IV – Negligible – A condition that could cause the need for minor first aid treatment though would not adversely affect personal safety or health. A condition that subjects facilities, equipment, or flight hardware to more that normal wear and tear.

Probability Estimate:

Probability is the likelihood that an identified hazard will result in a mishap, based on an assessment of such factors as location, exposure in terms of cycles or hours of operation, and affected population. The following is an example of Probability Estimation:

A. Likely to occur immediately
B. Probably will occur in time
C. May occur in time
D. Unlikely to occur
E. Improbable to occur

The risk matrix is completed by documenting each hazard cause severity and likelihood of occurrence in the appropriate risk assessment code block.

3.1 Risk Assessment Code (RAC) and Closure

	Probability Estimate				
Severity Class	A	B	C	D	E
I					
II					5*
III					
IV					

Table 4
Crane 7-10 Risk Assessment Code Matrix

A summary of the risk assessment criteria for the Critical Items List components follows.

Critical Item	Severity Class	Probability	RAC No.
1. Drum Gear	Critical (II)	Improbable(E)	5
2. Hoist Gearbox	Critical (II)	Improbable(E)	5
3. Hoist Electric Motor Brake	Critical (II)	Improbable(E)	5
4. Hoist Mechanical Load Brake	Critical (II)	Improbable(E)	5
5. Primary Limit Switch	Critical (II)	Improbable(E)	5
6. Secondary Limit Switch	Critical (II)	Improbable(E)	5

It is noted that the effectiveness of the in place controls and verifications is demonstrated by the fact that lifting device failure has not been a contributing root cause since the inception of the lifting device certification program in 1985.

4.0 Controls and Verifications

4.1 Implement/Verify controls.

4.2 Crane Operator training to include:

- Emergency procedures/contingency actions; include specific hazards and special procedures.
- Effects of failure once it has occurred.

4.3 Test and Inspections

- Perform frequent/periodic tests and inspections
- Maintain Test and Inspection Procedures current.
- Perform daily Operational Tests and Inspections
- Maintenance of Failure Log

4.4 Specifications for New Equipment

Include requirement for:

- Factory tests before shipment
- Crane electrification system factory tests
- Crane acceptance test procedures
- All gearing designed to AGMA standards
- Attach gears and shafts by a method approved by hoisting standards

5.0 End-to-End Analysis

There were no areas of concern identified which are the design responsibility of other contractors or NASA Centers.

6.0 Sneak Circuit Analysis

There was no sneak circuit analysis performed on this lifting device.

7.0 Recommendations

- Continue to certify the lifting device to reflect operational requirements. Continue to perform maintenance of the critical items per OEM requirements.
- Only certified, trained operators shall be authorized to operate lifting devices.
- Maintain documents/approved test and inspection procedures current.
- Review/update this analysis, as required, to reflect any changes in operation or facility improvements that affect the crane system.

8.0 Conclusion

Based on the above analysis, the risk hazard with controls and verification in place, is assessed to be acceptable/controlled. With a RAC 5, it is concluded that this crane is in compliance with the requirements set forth in NASA-STD-8719.9 for performing critical lift operations.