VIRGINIA crane®

P.O. Box 289
Ashland, Va. 23005
(804) 798-8263

F.M.E.A. Data

October 7, 1993

for

Goddard Space Flight Center
Wallops Flight Facility
Wallops Island, Virginia 23337

Reference : V-55 BRIDGE CRANE
Contract No. Nas5-32131
Requisition/P.o. No. 273-56397A(1C)
20 Ton Capacity Overhead Crane

A Registered Trademark of FOLEY MATERIAL HANDLING CO. INC.

= FOREWARD =

DATA PRESENTED HEREIN FOLLOWS A GENERAL FORMAT SEQUENCE PRESUMING THE LOAD HOOK AS THE POINT OF LOADING ORIGIN AND PROGRESSING THROUGH THE VARIOUS MACHINE STRUCTURAL AND MECHANICAL ASSEMBLIES.

EACH PRINCIPAL ASSEMBLY IS IDENTIFIED WITH RESPECT TO ACTUAL LOADING AT THE RATED EQUIPMENT CAPACITY IN THIS SPECIFIC APPLICATION, WITH COMMERCIAL ASSEMBLIES FURTHER DEFINED BY THEIR APPLICABLE COMMERCIAL RATINGS.

AT THE CONCLUSION OF EACH SECTION IS A SYNOPSIS OF FAILURE EVENTS WITH RESULTANT EFFECTS.

- INDEX -

CRANE ASSEMBLY AND PRIMARY COMPONENT IDENTIFICATION.....SECTION 1

HOIST ASSEMBLY.....SECTION 2

HOIST TROLLEY AND TROLLEY DRIVE.....SECTION 3

CRANE GIRDER.....SECTION 4

CRANE END TRUCKS AND CRANE DRIVES.....SECTION 5

ELECTRICAL CONTROL SYSTEM.....SECTION 6

= SECTION 1 =

CRANE ASSEMBLY AND PRIMARY COMPONENT IDENTIFICATION

- INDEX -

CRANE RATING AND DESIGN PARAMETERS.....PAGE 1.2

CRANE OVERVIEW AND PRIMARY COMPONENT IDENTIFICATION.....PAGE 1.3

= CRANE RATING AND DESIGN PARAMETERS =

FUNCTIONAL PERFORMANCE AND RATING:

CRANE SPAN, C/C OF RUNWAYS..... 37'4"

LIFTING CAPACITY @ LOAD HOOK..... 20 TONS

MINIMUM LIFT HEIGHT REQUIRED..... 34'0"

LIFTING / LOWERING SPEEDS..... 20 FPM *

TROLLEY TRAVEL SPEED..... 50 FPM *

CRANE TRAVEL SPEED..... 70 FPM *

* SPEEDS LISTED ARE MAXIMUM - ALL MOTIONS ARE PROVIDED WITH VARIABLE FREQUENCY / VARIABLE SPEED DRIVES.

OPTIONAL FEATURES INCLUDED:

NON-CORRODING, NON-SPARKING WIRE ROPE, LOWER BLOCK HOUSING, AND LOAD HOOK.

DRIP PAN PROTECTION BENEATH ALL GEAR CASE ASSEMBLIES.

STATIC DISCHARGE GROUNDING REEL SYSTEM TO PERMIT CONTINUOUS GROUND CONNECTIONS BETWEEN LOAD, EQUIPMENT FRAME(S), AND BUILDING STRUCTURE.

EQUIPMENT DESIGN AND PERFORMANCE CRITERIA STANDARDS:

IN ACCORDANCE WITH CMAA SPECIFICATION 70 STANDARDS FOR CLASS "C" SERVICE.

CRANE OVERVIEW

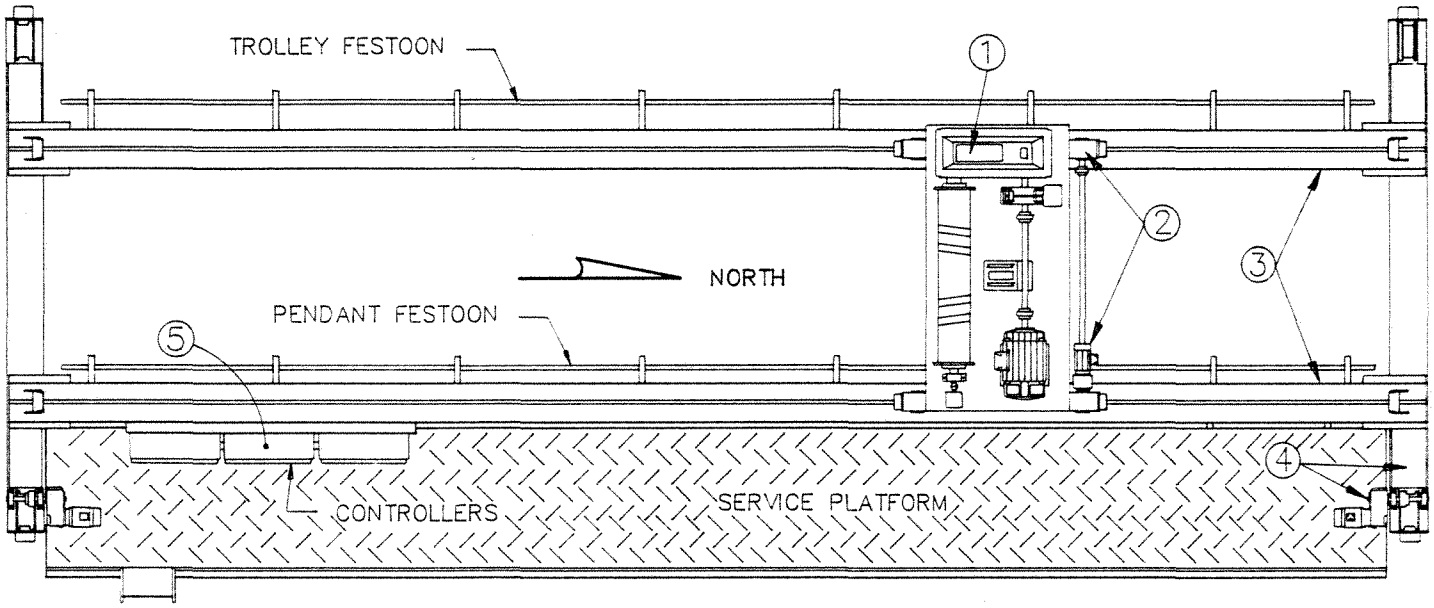

ITEM NO.	PRIMARY COMPONENT IDENTIFICATION	REF. SECTION
1	HOIST ASSEMBLY	2
2	TROLLEY & TROLLEY DRIVE	3
3	BRIDGE STRUCTURE	4
4	CRANE END TRUCKS & CRANE DRIVES	5
5	ELECTRICAL CONTROL	6

= SECTION 2 =

HOIST ASSEMBLY

- INDEX -

HOIST OVERVIEW.....PAGE 2.2

DRIVE TRAIN SYSTEM.....PAGE 2.3

REEVING SYSTEM.....PAGE 2.4

LIMIT SWITCHES.....PAGE 2.5

SYNOPSIS.....PAGE 2.6
THRU 2.7

HOIST OVERVIEW

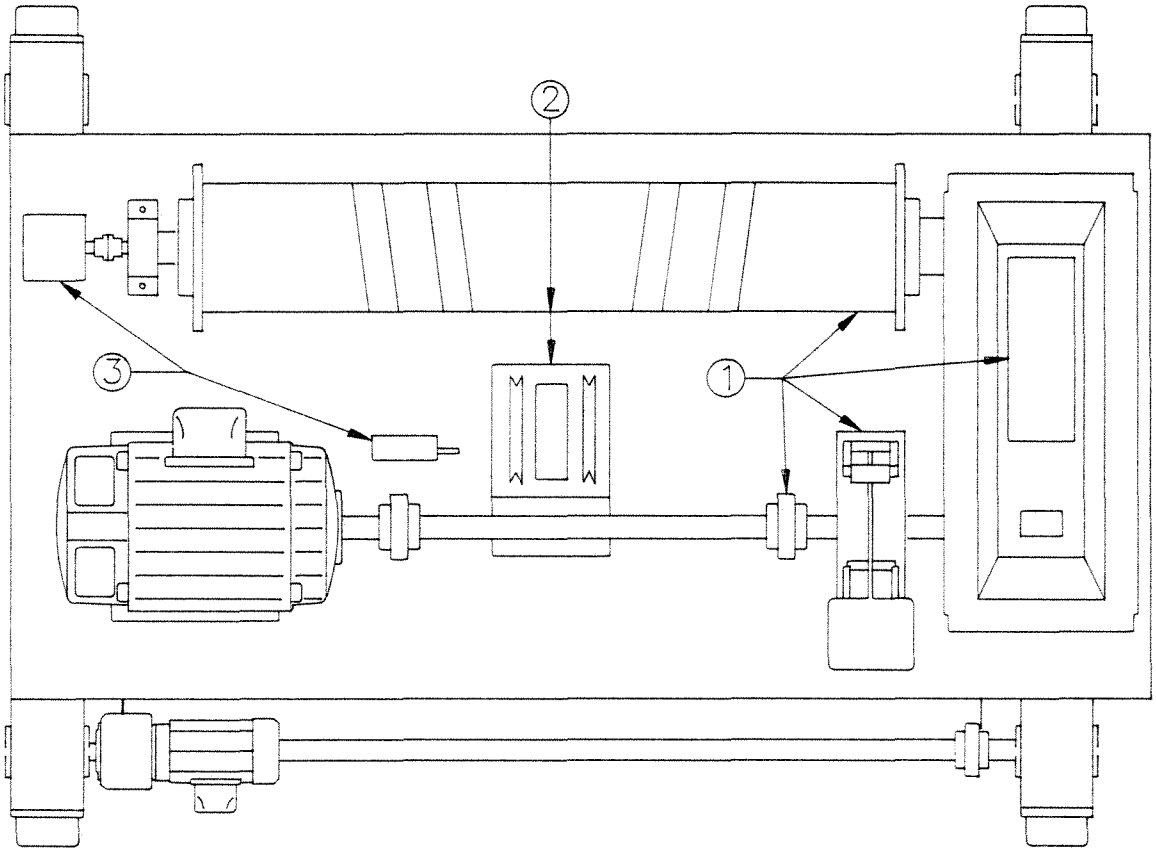

ITEM NO.	PRIMARY COMPONENT IDENTIFICATION	REF. PAGES
1	DRIVE TRAIN SYSTEM	2.3
2	REEVING SYSTEM	2.4
3	LIMIT SWITCHES	2.5

DRIVE TRAIN SYSTEM

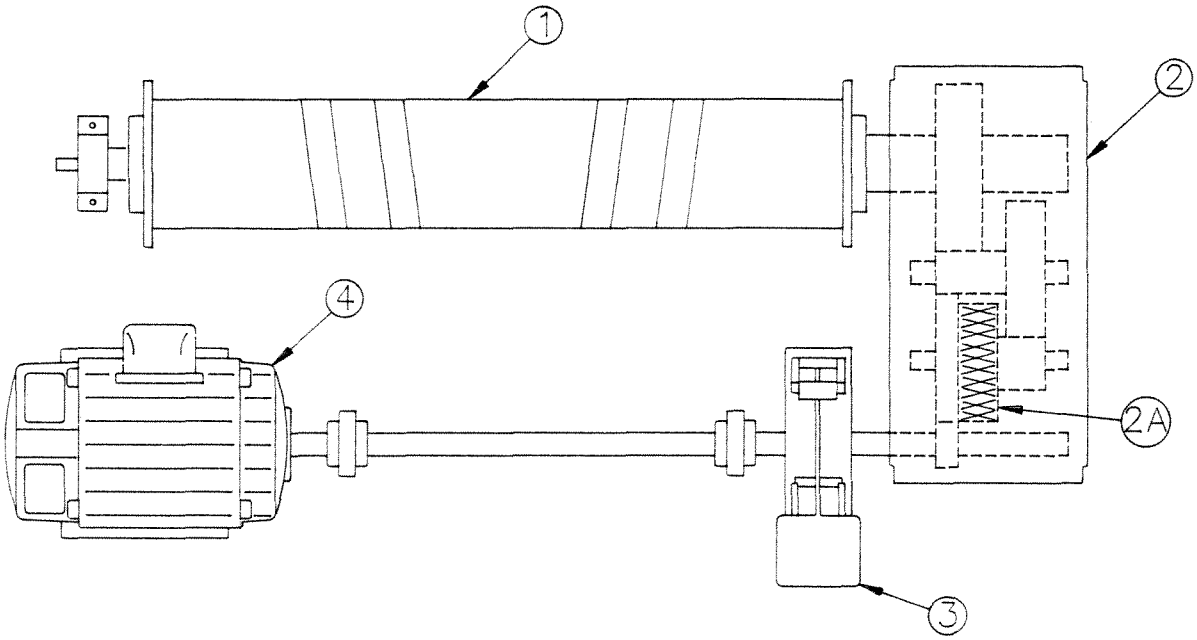

1– HOIST ROPE DRUM –
SCORED RIGHT HAND/LEFT HAND FOR 5/8" DIA. ROPE, PITCH DIAMETER 14"
APPLIED DRUM LOAD AT RATED CAPACITY (2 LINE TOTAL), 10,200 LBS.
ACTUAL DRUM TORQUE LOAD AT RATED CAPACITY = 71,400 IN–LBS.

2– HOIST GEAR REDUCER ASSEMBLY –
THREE REDUCTION, HELICAL GEARING, OIL BATH LUBRICATED.
ACTUAL GEAR RATIO, TOTAL, 78.4:1.
HOISTING SERVICE APPLICATION RATING = 35 HP.
DESIGN MAXIMUM OUTPUT TORQUE RATING = 101,100 IN–LBS.

2a– HOIST MECHANICAL LOAD BRAKE ASSEMBLY –
DESIGN INTEGRAL WITH HOIST GEAR REDUCER ASSEMBLY, LOCATED BETWEEN FIRST AND SECOND GEAR REDUCTIONS.
WESTON TYPE DOUBLE DISC. OIL BATH LUBRICATED. ENGAGED BY PAWL & RATCHET ASSEMBLY DURING ALL LOWERING MOTIONS, DISENGAGES AND ROTATES FREELY DURING ALL HOISTING MOTIONS.

3– HOIST MOTOR BRAKE –
SPRING SET, ELECTRICALLY RELEASED SHOE TYPE, D.C. OPERATED, 8" DIA BRAKE–WHEEL MOUNTED DIRECTLY TO GEAR REDUCER INPUT SHAFT.
BRAKE TORQUE RATING 138 FT–LBS.

4– HOIST MOTOR –
A.C. SQUIRREL CAGE TYPE, TENV CONSTRUCTION, FRAME 286T.
60 MINUTE TIME RATED. CLASS H INSULATION SYSTEM.
30 HP RATING, 4 POLE CONFIGURATION, SYNCHRONOUS RPM 1800

REEVING SYSTEM

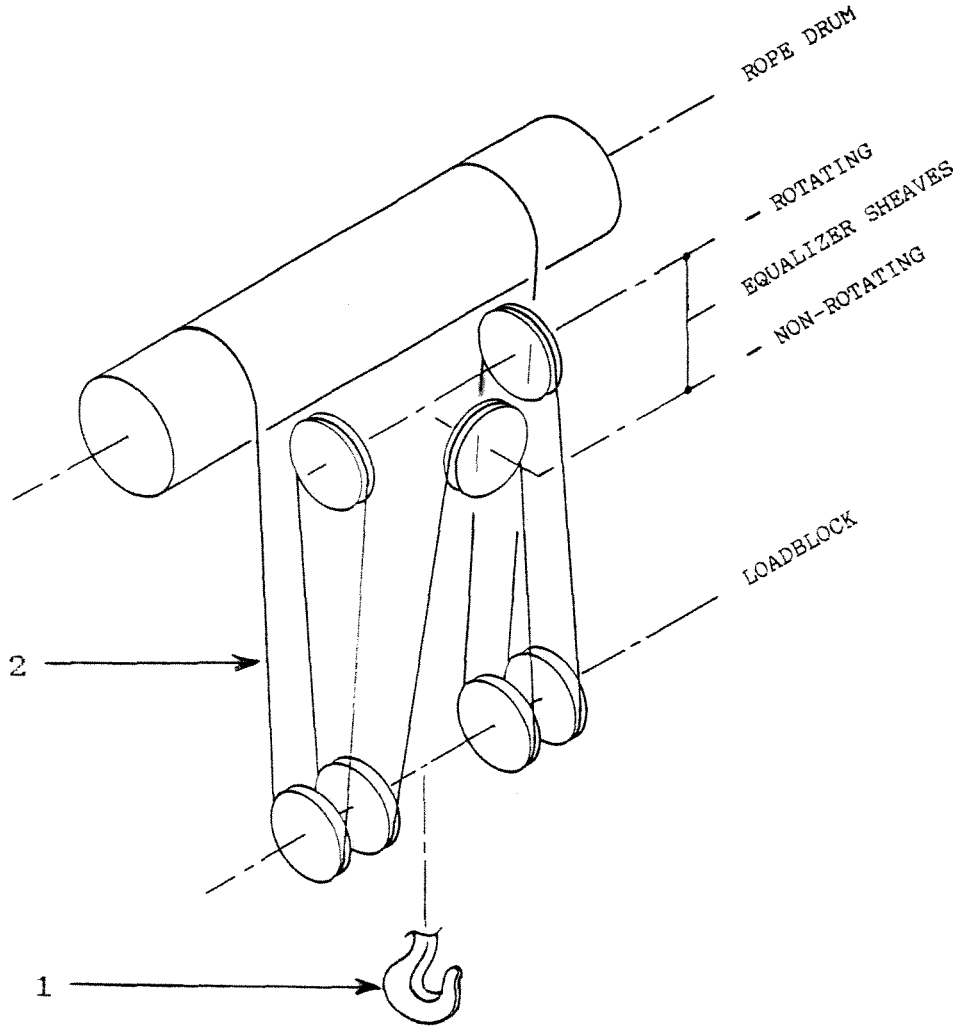

1- LOAD HOOK -
HOOK MATERIAL IS ASTM B148.
DESIGN IS BASED ON 20 TON LOAD RATING WITH 5:1 FACTOR, i.e. WITH NORMAL WORKING STRESS LEVELS NOT EXCEEDING 20% OF ULTIMATE TENSILE STRENGTH OF MATERIAL UTILIZED.

2- WIRE ROPE -
REEVED 4 PART DOUBLE, TOTAL LOADING SHARED BY 8 STRANDS OF ROPE.
LIVE LOAD 40,000 LBS + LOADBLOCK ASSY ALLOWANCE 800 LBS.
MAXIMUM ROPE LOAD PER STRAND AT RATED CAPACITY = 5,100 LBS.
WIRE ROPE UTILIZED IS 5/8" DIA STAINLESS STEEL, 6 X 25 IWRC CONSTRUCTION. MANUFACTURER'S MINIMUM BREAK STRENGTH RATING 35,000 LBS.
DESIGN FACTOR OF ROPE AT RATED CAPACITY = 6.86:1.

LIMIT SWITCHES

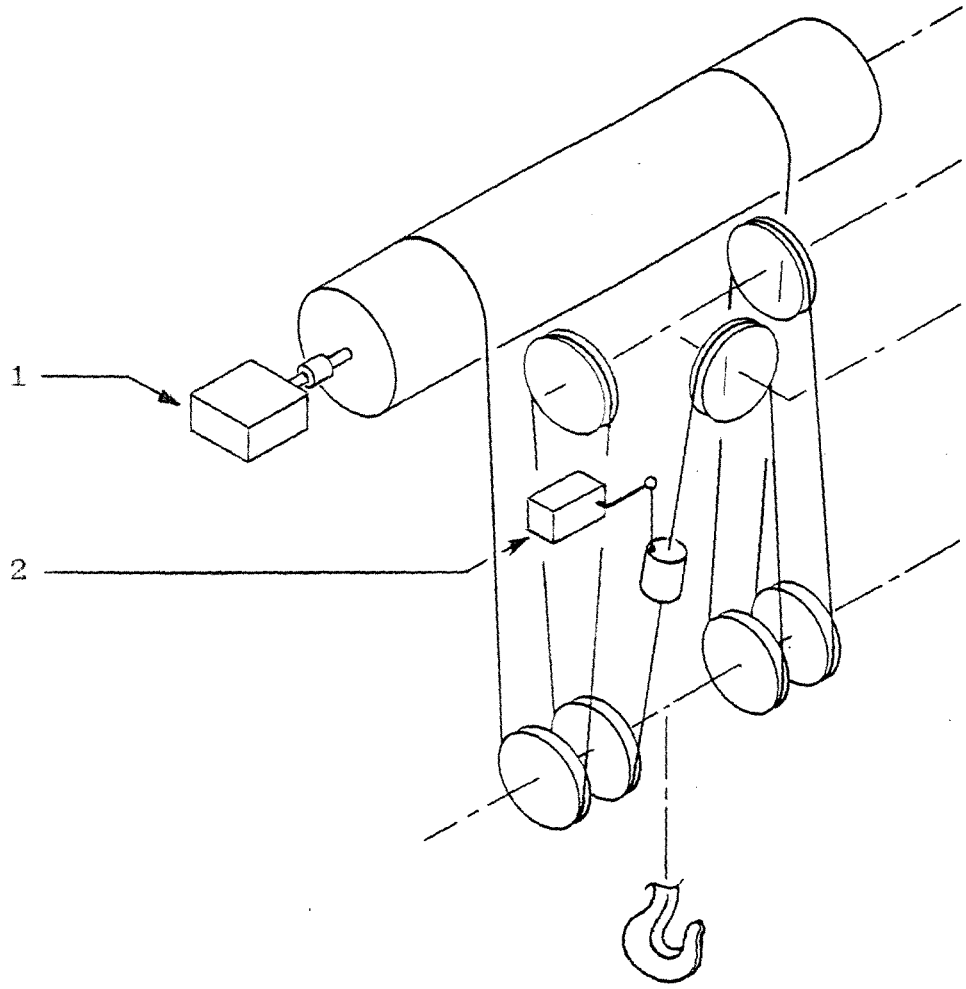

1- GEARED UPPER & LOWER LIMIT SWITCH -

ROTARY TYPE LIMIT SWITCH IS MOUNTED AT THE IDLER END OF THE ROPE DRUM AND DIRECT DRIVEN FROM AN EXTENSION SHAFT INTEGRAL WITH THE IDLER END DRUM SUPPORT AXLE.

THIS LIMIT SWITCH GOVERNS THE NORMAL RANGE OF HOOK TRAVEL BY INTERRUPTING THE HOIST "UP" OR "DOWN" CONTROL CIRCUITS WHEN PRESET HOOK HEIGHTS ARE REACHED, DISENGAGING THE CONTROL AND SETTING THE MOTOR BRAKE.

NORMAL OPERATION MAY BE CONTINUED BY REVERSING THE DIRECTION OF HOOK TRAVEL.

2- UPPER OVERTRAVEL LIMIT SWITCH -

WEIGHT TYPE LIMIT SWITCH IS MOUNTED TO HOIST FRAME DECKING AND IS ACTUATED BY LOWER BLOCK ASSEMBLY COMING INTO CONTACT WITH AND RAISING THE ACTUATOR WEIGHT.

THIS LIMIT SWITCH INTERRUPTS THE CONTROL CIRCUIT TO THE MAIN POWER CONTACTOR, IN TURN DISCONNECTING POWER TO THE ENTIRE CRANE AND SETTING ALL BRAKES.

NORMAL OPERATION CANNOT BE CONTINUED IN THIS EVENT WITHOUT CORRECTIVE ACTION AS THE MAIN POWER CONTACTOR CANNOT BE RESET FROM THE NORMAL OPERATING PENDANT STATIONS.

= SECTION 2 =

HOIST ASSEMBLY SYNOPSIS

DRIVE TRAIN SYSTEM - REF. PAGE 2.3;

PROJECTED EQUIVALENT HOOK LOAD EXPECTED TO CAUSE DEFORMATION DAMAGE IN ONE OR MORE CRITICAL PATH ELEMENTS.....87 TONS

PROJECTED EQUIVALENT HOOK LOAD EXPECTED TO CAUSE CATASTROPHIC FAILURE IN ONE OR MORE CRITICAL PATH ELEMENTS.....141 TONS

INDIVIDUAL FAILURES WHICH WILL RESULT IN LOSS OF LOAD;

- -> COLLAPSE OR SEPARATION OF ROPE DRUM.
- -> SHEAR OR SEPARATION OF BOLTS AT DRUM DRIVE HUB.
- -> SHEAR OF DRUM DRIVE HUB KEY AND/OR SUPPORTING SHAFT.
- -> COLLAPSE OR SEPARATION OF GEAR CASE HOUSING.
- -> SHEAR OF DRUM GEAR OR INTERMEDIATE GEAR OR PINION KEYS.
- -> INTERNAL GEARCASE SHAFT FAILURE OF DRUM, INTERMEDIATE, OR LOAD BRAKE SHAFTS.
- -> COLLAPSE OR SEPARATION OF BEARINGS ALLOWING LOSS OF GEAR TOOTH MESH.
- -> BREAKAGE OF MULTIPLE ADJACENT GEAR TEETH.
- -> BREAKAGE OF WESTON LOAD BRAKE CAM NUT.

MULTIPLE FAILURES WHICH WILL RESULT IN LOSS OF LOAD;

- -> LOSS OF BRAKING ACTION OF WESTON LOAD BRAKE (2a) PLUS-
  - -> BREAKAGE OF GEARCASE INPUT SHAFT, LOSS OF GEAR MESH.
  - -> LOSS OF BRAKING ACTION OF MOTOR BRAKE (3).
    (LOAD CONTROL IS MAINTAINED WHILE MOTOR IS UNDER POWER - LOSS OCCURS ONLY WITH POWER OFF AND SIMULTANEOUS FAILURE OF BOTH LOAD BRAKE AND MOTOR BRAKE).

SINGLE FAILURES WHICH WILL NOT RESULT IN LOSS OF LOAD;

- -> MOTOR EXTENSION SHAFT OR SHAFT COUPLING BREAKAGES.
- -> LOSS OF MOTOR TORQUE OR MOTOR SHAFT BREAKAGE.
- -> COMPLETE DESTRUCTION OR SEPARATION OF MOTOR.

= SECTION 2 =

HOIST ASSEMBLY SYNOPSIS

REEVING SYSTEM - REF. PAGE 2.4;

PROJECTED EQUIVALENT HOOK LOAD EXPECTED TO CAUSE DEFORMATION DAMAGE IN ONE OR MORE CRITICAL PATH ELEMENTS.....44 TONS

PROJECTED EQUIVALENT HOOK LOAD EXPECTED TO CAUSE CATASTROPHIC FAILURE IN ONE OR MORE CRITICAL PATH ELEMENTS.....100 TONS

INDIVIDUAL FAILURES WHICH WILL RESULT IN LOSS OF LOAD;

-> BREAKAGE OR SUBSTANTIAL DEFORMATION OF LOAD HOOK OR HOOK NUT.
-> BREAKAGE OF WIRE ROPE.
-> FAILURE OF WIRE ROPE END FASTENERS TO SECURE ROPE TO DRUM.
-> SHEAR OR SEPARATION OF WIRE ROPE SHEAVE PINS.
-> COLLAPSE OR SEPARATION OF SHEAVE SUPPORT STRUCTURES.

INDIVIDUAL FAILURES WHICH WILL NOT RESULT IN LOSS OF LOAD;

-> FAILURE OF ROPE SHEAVE BEARINGS.
-> FAILURE OF HOOK THRUST BEARING.

LIMIT SWITCHES - REF. PAGE 2.5;

INDIVIDUAL FAILURES WHICH WILL RESULT IN LOSS OF LOAD;

-> NONE.

MULTIPLE FAILURES WHICH MAY RESULT IN LOSS OF LOAD;

-> FAILURE OF GEARED UPPER LIMIT SWITCH (1) TO OPEN HOIST "UP" CONTROL CIRCUIT, OR FAILURE OF THE CONTROLLER TO OPEN MOTOR CIRCUIT AFTER INTERRUPTION OF THE CONTROL SIGNAL, - FOLLOWED BY -
  -> FAILURE OF UPPER OVERTRAVEL LIMIT SWITCH (2) TO OPEN MAIN POWER CONTACTOR CONTROL CIRCUIT, OR FAILURE OF THE MAIN POWER CONTACTOR TO OPEN POWER CIRCUIT AFTER INTERRUPTION OF THE CONTROL SIGNAL.

THIS SEQUENCE MUST FIRST PRESUME THE OPERATOR TO RUN THE HOOK BLOCK BEYOND THE NORMAL UPPER STOPPING POINT, WHERE FOLLOWING THE FAILURE OF BOTH LIMIT LIMIT SWITCHES AND/OR POWER CONTROLLERS, THE LOWER BLOCK ASSEMBLY WILL BE DRIVEN UNDER POWER INTO THE UNDERSIDE OF THE HOIST TROLLEY FRAME. POSSIBLE RESULT IS WIRE ROPE BREAKAGE.

= SECTION 3 =

HOIST TROLLEY AND TROLLEY DRIVE

- INDEX -

WHEEL ASSEMBLY.....PAGE 3.2

DRIVE ASSEMBLY.....PAGE 3.2

LIMIT SWITCHES.....PAGE 3.2

END BUMPERS.....PAGE 3.2

SYNOPSIS.....PAGE 3.3
THRU 3.4

TROLLEY ASSEMBLY

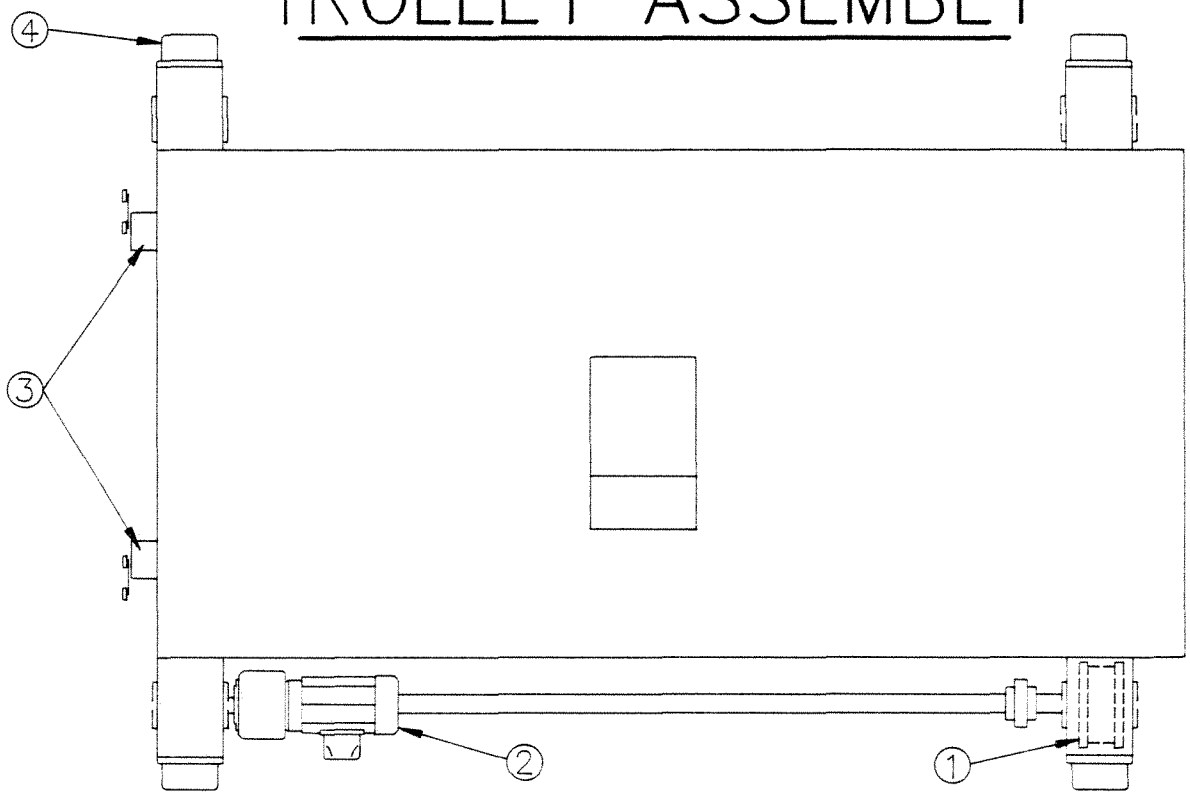

1– WHEEL ASSEMBLY –
WHEEL TREAD DIAMETER 8", MAXIMUM LOAD RATING OF WHEEL ASSEMBLY IN STD. CLASS "C" TROLLEY SERVICE = 28,000 LBS.
TROLLEY FRAME DESIGN LIMITS DROP TO NO MORE THAN 1/2" IN THE EVENT OF WHEEL, BEARING, OR AXLE FAILURE.

ACTUAL APPLIED WHEEL LOAD (MAXIMUM) OF THIS APPLICATION AT RATED CAPACITY = 12,000 LBS.

2– DRIVE ASSEMBLY –
DRIVING TORQUE AVAILABLE AT WHEEL SHAFT AT RATED MOTOR HP OUTPUT = 3,860 IN–LBS.
BRAKING TORQUE AVAILABLE AT WHEEL SHAFT AT RATED BRAKE TORQUE = 4,280 IN–LBS.
GEAR REDUCER RATING IN CLASS 1 SERVICE = 8,140 IN–LBS.
GEAR REDUCER SERVICE FACTOR IN THIS APPLICATION = 2.1:1

CALCULATED DRIVING TORQUE REQUIREMENT = 2,880 IN–LBS.

3– LIMIT SWITCHES –
TROLLEY TRAVEL LIMIT SWITCHES ARE MOUNTED TO THE TROLLEY TRUCK FRAME & ACTUATED BY CAMS ATTACHED NEAR EITHER END OF THE CRANE BRIDGE GIRDERS.
THESE SWITCHES GOVERN THE NORMAL RANGE OF TROLLEY TRAVEL BY INTERRUPTING THE CRANE "NORTH" OR "SOUTH" CONTROL CIRCUITS WHEN THE RESPECTIVE PRESET CAM LOCATIONS ARE REACHED, DISENGAGING THE CONTROL.
NORMAL OPERATION MAY BE CONTINUED BY REVERSING THE DIRECTION OF TROLLEY TRAVEL.

4– RUBBER BUMPERS –
TROLLEY TRUCK FRAME ENDS ARE FITTED WITH RUBBER BUMPERS ALIGNED WITH TROLLEY END STOPS.

= SECTION 3 =

TROLLEY ASSEMBLY SYNOPSIS

WHEEL ASSEMBLY - REF. PAGE 3.2;

PROJECTED EQUIVALENT HOOK LOAD EXPECTED TO CAUSE DEFORMATION DAMAGE IN ONE OR MORE CRITICAL PATH ELEMENTS.....173 TONS

PROJECTED EQUIVALENT HOOK LOAD EXPECTED TO CAUSE CATASTROPHIC FAILURE IN ONE OR MORE CRITICAL PATH ELEMENTS.....280 TONS

INDIVIDUAL FAILURES WHICH WILL RESULT IN LOSS OF LOAD;
-> NONE.

MULTIPLE FAILURES WHICH WILL RESULT IN LOSS OF LOAD;
-> NONE.

TROLLEY TRUCK DESIGN LIMITS DROP TO 1/2" IN THE EVENT OF FAILURE OF ANY STRUCTURAL OR MECHANICAL COMPONENTS OF THE TRUCK ASSEMBLIES.

DRIVE ASSEMBLIES - REF. PAGE 5.2;

INDIVIDUAL FAILURES WHICH WILL RESULT IN LOSS OF LOAD;
-> NONE.

MULTIPLE FAILURES WHICH WILL RESULT IN LOSS OF LOAD;
-> NONE.

LOSS OF TROLLEY DRIVE TRAIN CONTINUITY WILL RESULT IN INABILITY TO MOVE IN NORTH - SOUTH DIRECTIONS.

= SECTION 3 =

TROLLEY ASSEMBLY SYNOPSIS

LIMIT SWITCHES - REF. PAGE 3.2;

INDIVIDUAL FAILURES WHICH WILL RESULT IN LOSS OF LOAD;
-> NONE.

MULTIPLE FAILURES WHICH WILL RESULT IN LOSS OF LOAD;
-> NONE.

RUBBER BUMPERS - REF. PAGE 3.2;

INDIVIDUAL FAILURES WHICH WILL RESULT IN LOSS OF LOAD;
-> NONE.

MULTIPLE FAILURES WHICH WILL RESULT IN LOSS OF LOAD;
-> NONE.

NORMAL RANGE OF TROLLEY TRAVEL IS GOVERNED BY NORTH - SOUTH TROLLEY TRAVEL LIMIT SWITCHES. WHEN APPROACHED AT REDUCED SPEEDS THE LIMIT SWITCHES WILL STOP THE TROLLEY BEFORE BUMPER CONTACT IS MADE WITH THE TROLLEY END STOPS.

BUMPER - END STOP CONTACT WILL BE EXPERIENCED BY APPROACHING THE END OF NORMAL TRAVEL RANGE AT HIGH RATES OF TRAVEL SPEED OR IN THE EVENT OF LIMIT SWITCH FAILURE.

= SECTION 4 =

CRANE GIRDERS

- INDEX -

GIRDER SECTION & DESIGN DEFINITION.....PAGE 4.2

SYNOPSIS.....PAGE 4.3

CRANE STRUCTURAL

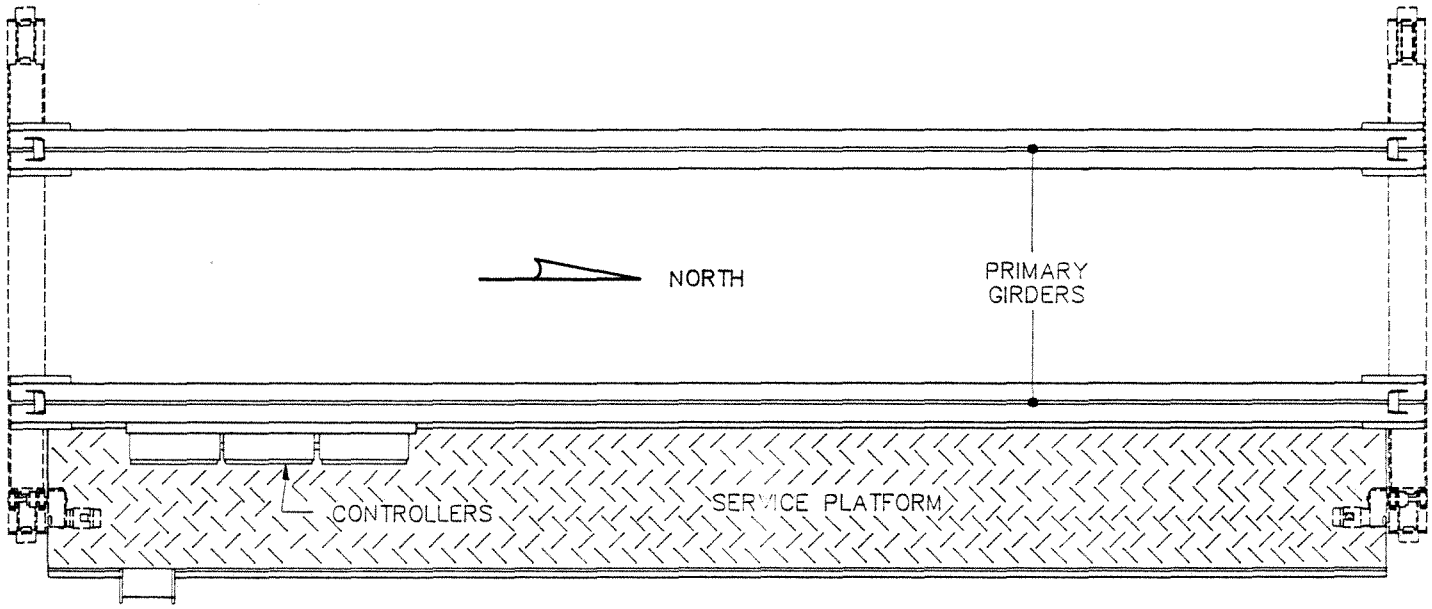

PRIMARY CRANE GIRDER STRUCTURE IS COMPRISED OF TWO W27 x 94 ROLLED BEAM SECTIONS, WITH FULL LENGTH 3/8" STIFFNER PLATES ADDED TO THE OUTER SIDE OF EACH SECTION FOR TORSIONAL RIGIDITY.

CRANE DESIGN AND GIRDER PLACEMENT ARE SYMMETRICAL ABOUT THE LOAD HOOK CENTERLINE POSITION, SUCH THAT HOOK LOADING IS SHARED EQUALLY BY THE GIRDERS.

IN GIRDER DESIGN ANALYSIS TWO POSITIONS OF THE TROLLEY HOIST ARE REQUIRED TO DEVELOP MAXIMUM LOADING AND RESULTANT STRESS VALUES;

1– MAXIMUM BENDING STRESSES AND GIRDER DEFLECTIONS ARE REALIZED WITH THE TROLLEY HOIST NEAR MID SPAN. IN THIS POSITION, WITH RATED CAPACITY HOOK LOAD, Sb = 12,330 PSI MAX IN THE PRIMARY GIRDERS.

2– MAXIMUM GIRDER END CONNECTION SHEAR LOADING IS REALIZED WITH THE TROLLEY HOIST POSITIONED AT EITHER END OF THE CRANE ADJACENT TO THE END STOPS. IN THIS POSITION, WITH RATED CAPACITY HOOK LOAD, Ss = 4,874 PSI MAX AT THE PRIMARY GIRDER END CONNECTIONS.

= SECTION 4 =

CRANE GIRDER SYNOPSIS

PROJECTED EQUIVALENT HOOK LOAD EXPECTED TO CAUSE DEFORMATION DAMAGE IN EITHER OR BOTH PRIMARY GIRDERS -

WITH HOIST AT OR NEAR MID-SPAN.....92 TONS
WITH HOIST AT END STOPS, EITHER END.....135 TONS

PROJECTED EQUIVALENT HOOK LOAD EXPECTED TO CAUSE CATASTROPHIC FAILURE IN EITHER OR BOTH PRIMARY GIRDERS -

WITH HOIST AT OR NEAR MID-SPAN.....132 TONS
WITH HOIST AT END STOPS, EITHER END.....188 TONS

INDIVIDUAL FAILURES WHICH WILL RESULT IN LOSS OF LOAD;

-> BUCKLING OR COLLAPSE OF EITHER OR BOTH GIRDERS.
-> SHEAR FAILURE AT GIRDER END CONNECTIONS.

= SECTION 5 =

CRANE END TRUCKS AND CRANE DRIVES

- INDEX -

WHEEL ASSEMBLY.....PAGE 5.2

DRIVE ASSEMBLY.....PAGE 5.2

LIMIT SWITCHES.....PAGE 5.2

END BUMPERS.....PAGE 5.2

SYNOPSIS.....PAGE 5.3
THRU 5.4

CRANE END TRUCKS & DRIVE

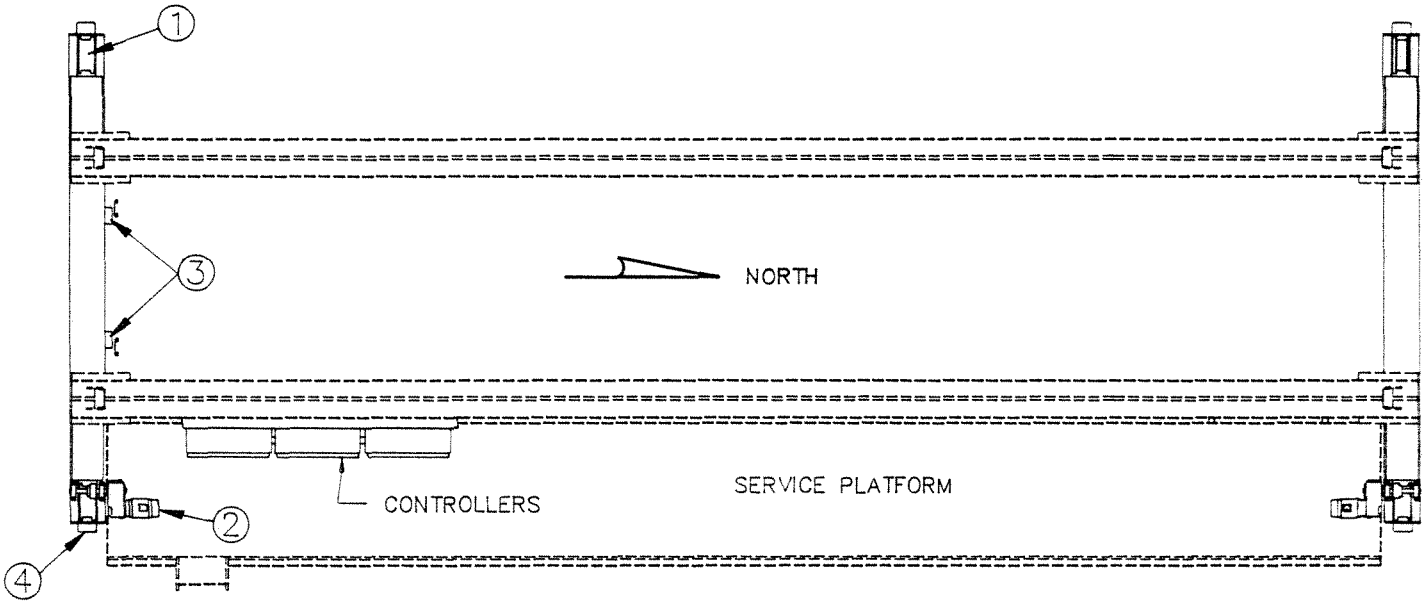

1– WHEEL ASSEMBLY –
WHEEL TREAD DIAMETER 12", MAXIMUM LOAD RATING OF WHEEL ASSEMBLY IN STD. CLASS "C" CRANE SERVICE = 36,625 LBS.
TRUCK FRAME DESIGN LIMITS DROP TO NO MORE THAN 1/2" IN THE EVENT OF WHEEL, BEARING, OR AXLE FAILURE.

ACTUAL APPLIED WHEEL LOAD (MAXIMUM) OF THIS APPLICATION AT RATED CAPACITY = 26,937 LBS.

2– DUAL DRIVE ASSEMBLIES, EACH –
DRIVING TORQUE AVAILABLE AT PINION SHAFT AT RATED MOTOR HP OUTPUT = 1,390 IN–LBS.
BRAKING TORQUE AVAILABLE AT PINION SHAFT AT RATED BRAKE TORQUE = 1,390 IN–LBS.
GEAR REDUCER RATING IN CLASS 1 SERVICE = 2,650 IN–LBS.
GEAR REDUCER SERVICE FACTOR IN THIS APPLICATION = 1.9:1

CALCULATED DRIVING TORQUE REQUIREMENT = 1,209 IN–LBS.

3– LIMIT SWITCHES –
CRANE TRAVEL LIMIT SWITCHES ARE MOUNTED TO THE CRANE END TRUCK FRAME & ACTUATED BY CAMS ATTACHED NEAR EITHER END OF THE CRANE RUNWAY GIRDERS.
THESE SWITCHES GOVERN THE NORMAL RANGE OF CRANE TRAVEL BY INTERRUPTING THE CRANE "EAST" OR "WEST" CONTROL CIRCUITS WHEN THE RESPECTIVE PRESET CAM LOCATIONS ARE REACHED, DISENGAGING THE CONTROL.
NORMAL OPERATION MAY BE CONTINUED BY REVERSING THE DIRECTION OF CRANE TRAVEL.

4– RUBBER BUMPERS –
CRANE TRUCK FRAME ENDS ARE FITTED WITH RUBBER BUMPERS ALIGNED WITH CRANE RUNWAY END STOPS.

= SECTION 5 =

CRANE END TRUCKS AND CRANE DRIVES SYNOPSIS

WHEEL ASSEMBLY - REF. PAGE 5.2;

PROJECTED EQUIVALENT HOOK LOAD EXPECTED TO CAUSE DEFORMATION DAMAGE IN ONE OR MORE CRITICAL PATH ELEMENTS -

WITH HOIST AT MID SPAN.....149 TONS
WITH HOIST AT END STOPS, EITHER END.....79 TONS

PROJECTED EQUIVALENT HOOK LOAD EXPECTED TO CAUSE CATASTROPHIC FAILURE IN ONE OR MORE CRITICAL PATH ELEMENTS -

WITH HOIST AT MID SPAN.....248 TONS
WITH HOIST AT END STOPS, EITHER END.....134 TONS

INDIVIDUAL FAILURES WHICH WILL RESULT IN LOSS OF LOAD;
-> NONE.

MULTIPLE FAILURES WHICH WILL RESULT IN LOSS OF LOAD;
-> NONE.

CRANE END TRUCK AND GIRDER CONNECTION DESIGN LIMIT DROP TO 1/2" IN THE EVENT OF FAILURE OF ANY STRUCTURAL OR MECHANICAL COMPONENTS OF THE TRUCK ASSEMBLIES.

DRIVE ASSEMBLIES - REF. PAGE 5.2;

INDIVIDUAL FAILURES WHICH WILL RESULT IN LOSS OF LOAD;
-> NONE.

MULTIPLE FAILURES WHICH WILL RESULT IN LOSS OF LOAD;
-> NONE.

LOSS OF GEAR TRAIN CONTINUITY IN ONE DRIVE WILL ALLOW THE CRANE TO CONTINUE TO OPERATE BRIEFLY, DRIVING FROM THE REMAINING INTACT DRIVE SIDE. INVERSE TIME OVERLOAD RELAYS WILL DETECT OVERCURRENT TO THE DRIVING MOTOR AND OPEN THE CONTROL CIRCUIT, WITH TIME REQUIRED TO DO SO BEING FUNCTIONS OF CRANE LOAD MAGNITUDE AND POSITION OF THE HOIST ON THE CRANE WITH RESPECT TO THE DRIVING MOTOR.

= SECTION 5 =

CRANE END TRUCKS AND CRANE DRIVES SYNOPSIS

LIMIT SWITCHES - REF. PAGE 5.2;

INDIVIDUAL FAILURES WHICH WILL RESULT IN LOSS OF LOAD;
-> NONE.

MULTIPLE FAILURES WHICH WILL RESULT IN LOSS OF LOAD;
-> NONE.

RUBBER BUMPERS - REF. PAGE 5.2;

INDIVIDUAL FAILURES WHICH WILL RESULT IN LOSS OF LOAD;
-> NONE.

MULTIPLE FAILURES WHICH WILL RESULT IN LOSS OF LOAD;
-> NONE.

NORMAL RANGE OF CRANE TRAVEL IS GOVERNED BY EAST - WEST CRANE TRAVEL LIMIT SWITCHES. WHEN APPROACHED AT REDUCED SPEEDS THE LIMIT SWITCHES WILL STOP THE CRANE BEFORE BUMPER CONTACT IS MADE WITH THE CRANE RUNWAY END STOPS.

BUMPER - END STOP CONTACT WILL BE EXPERIENCED BY APPROACHING THE END OF NORMAL TRAVEL RANGE AT HIGH RATES OF TRAVEL SPEED OR IN THE EVENT OF LIMIT SWITCH FAILURE.

= SECTION 6 =

ELECTRICAL CONTROL SYSTEM

- INDEX -

FUNCTIONAL PROVISIONS.....PAGE 6.2

PROTECTIVE FEATURES - POWER CIRCUITS.....PAGE 6.3

PROTECTIVE FEATURES - CONTROL CIRCUITS.....PAGE 6.4

SYNOPSIS.....PAGE 6.5
THRU 6.6

CIRCUIT SCHEMATIC DIAGRAM.....DWG VC-1452E

= SECTION 6 =

FUNCTIONAL PROVISIONS

CRANE IS PROVIDED WITH TWO OPERATOR STATIONS, EACH PROVIDING FULL CONTROL CAPABILITY FOR ALL NORMAL CRANE MOTION FUNCTIONS. BOTH STATIONS ARE PENDANT, MOMENTARY PUSHBUTTON TYPE, SUSPENDED BENEATH THE CRANE -

-> ONE STATION IN FIXED POSITION NEAR THE NORTHEAST CORNER OF THE CRANE.

-> ONE STATION SUSPENDED FROM A FESTOON TRACK SYSTEM INSIDE THE EAST CRANE GIRDER, MOVEABLE ALONG THE GIRDER AT OPERATOR DISCRETION.

RESET - STOP FUNCTIONS CONTROLLING THE CRANE MAIN POWER CONTACTOR ARE AVAILABLE FROM EITHER OPERATOR STATION AT ALL TIMES.
MOTION CONTROL FUNCTIONS FOR HOIST - TROLLEY - BRIDGE ARE AVAILABLE FROM ONLY ONE OPERATOR STATION AT ANY GIVEN TIME, WITH THAT STATION BEING CHOSEN BY SELECTOR SWITCH AT OPERATOR DISCRETION.
MOTION SPEED CONTROL IS BY POTENTIOMETER, REGULATED FROM THE OPERATOR STATION IN USE.

THE MOVEABLE OPERATOR STATION ONLY IS ALSO PROVIDED WITH A SWITCH CONTROLLING POWER TO A 115V ACCESSORY OUTLET LOCATED ON THE HOIST TROLLEY.

ALL MOTIONS ARE PROVIDED WITH VARIABLE SPEED DRIVES. SYSTEMS ARE COMPRISED OF A.C. SQUIRREL CAGE INDUCTION TYPE MOTORS LINKED WITH VARIABLE FREQUENCY CONTROLS. SINGLE MOTORS ARE UTILIZED ON THE HOIST AND TROLLEY MOTIONS, WITH DUAL MOTOR DRIVE ON THE BRIDGE.

ALL DRIVE SYSTEMS PROVIDE CONSTANT RATE(S) OF SPEED AT OPERATOR SELECTED VALUE, UNAFFECTED BY VARYING LOAD CONDITIONS.

DRIVES ARE PROGRAMMABLE WITH RESPECT TO MINIMUM SPEED, MAXIMUM SPEED, AND ACCELERATION/DECELERATION RATE. THESE FUNCTIONAL OPERATING CHARACTERISTICS MAY BE ALTERED, IF DESIRED, BY REPROGRAMMING AT THE CONTROL PANELS.

= SECTION 6 =

PROTECTIVE FEATURES

POWER CIRCUIT:

INCOMING MAIN -
- ->MANUAL DISCONNECT SWITCH
- ->FUSES
- ->MAGNETIC DISCONNECT SWITCH

HOIST MOTOR BRANCH CIRCUIT -
- ->MANUAL DISCONNECT SWITCH
- ->FUSES
- ->VARIABLE FREQUENCY CONTROLLER *
- ->THERMAL OVERLOAD RELAYS
- ->MOTOR THERMOSTAT (CONTROL CIRCUIT)

TROLLEY MOTOR BRANCH CIRCUIT -
- ->MANUAL DISCONNECT SWITCH
- ->FUSES
- ->VARIABLE FREQUENCY CONTROLLER *
- ->THERMAL OVERLOAD RELAYS
- ->MOTOR THERMOSTAT (CONTROL CIRCUIT)

BRIDGE MOTOR(S) BRANCH CIRCUIT -
- ->MANUAL DISCONNECT SWITCH
- ->FUSES
- ->VARIABLE FREQUENCY CONTROLLER *
- ->THERMAL OVERLOAD RELAYS - EACH MOTOR
- ->MOTOR THERMOSTAT - EACH MOTOR (CONTROL CIRCUIT)

* VARIABLE FREQUENCY CONTROLLERS PROVIDE INHERENT PROTECTION AGAINST PHASE SEQUENCE REVERSAL IN THE POWER SUPPLY. CONTROLLERS WILL ALSO OPEN CIRCUIT AND DISPLAY FAULT CODE MESSAGES AT THE PANEL READOUT, PROTECTING AGAINST;

- -> POWER SUPPLY IMBALANCE OR PHASE LOSS
- -> POWER SUPPLY HIGH OR LOW VOLTAGE
- -> MOTOR OVERLOAD OR EXCESS CURRENT DEMANDS
- -> CONTROLLER OVERHEATING

= SECTION 6 =

PROTECTIVE FEATURES

CONTROL CIRCUIT;

CONTROL TRANSFORMER -
- ->460 VOLT PRIMARY FUSES (2)
- ->115 VOLT SECONDARY FUSE (1)
- ->GROUNDED NEUTRAL X2

MAIN POWER CONTACTOR OPENED BY -
- ->HOIST UPPER OVERTRAVEL LIMIT SWITCH.
- ->INTERRUPTION OF INCOMING POWER.
  (REQUIRES RESET BY OPERATOR TO RESUME)

HOIST "UP" OPENED BY -
- ->HOIST UPPER TRAVEL LIMIT SWITCH
- ->HOIST MOTOR THERMAL OVERLOAD RELAYS
- ->HOIST MOTOR THERMOSTAT

HOIST "DOWN" OPENED BY -
- ->HOIST LOWER TRAVEL LIMIT SWITCH

HOIST BRAKE RELAY ENGAGED BY -
- ->VARIABLE FREQUENCY CONTROLLER LOGIC *

TROLLEY "NORTH" OPENED BY -
- ->TROLLEY NORTH LIMIT SWITCH

TROLLEY "SOUTH" OPENED BY -
- ->TROLLEY SOUTH LIMIT SWITCH

TROLLEY ENABLING RELAY R2 OPENED BY -
- ->TROLLEY MOTOR THERMAL OVERLOAD RELAYS
- ->TROLLEY MOTOR THERMOSTAT

TROLLEY BRAKE RELAY ENGAGED BY -
- ->VARIABLE FREQUENCY CONTROLLER LOGIC *

BRIDGE "EAST" OPENED BY -
- ->BRIDGE EAST LIMIT SWITCH

BRIDGE "WEST" OPENED BY -
- ->BRIDGE WEST LIMIT SWITCH

BRIDGE ENABLING RELAY R3 OPENED BY -
- ->BRIDGE MOTOR THERMAL OVERLOAD RELAYS (2)
- ->BRIDGE MOTOR THERMOSTATS (2)

BRIDGE BRAKES RELAY ENGAGED BY -
- ->VARIABLE FREQUENCY CONTROLLER LOGIC *

* BRAKE RELEASE ACTIVATED BY VARIABLE FREQUENCY CONTROLLER LOGIC SYNCHRONIZES MOTOR/BRAKE ACTIONS AND INSURES BRAKES WILL SET IMMEDIATELY IN THE EVENT OF LOSS OF POWER TO MOTOR.

= SECTION 6 =

ELECTRICAL CONTROL SYNOPSIS

CONTROL CIRCUITS, REF PAGE 6.4; (CONTINUED FROM PRIOR PAGE)

MULTIPLE FAILURES WHICH MAY RESULT IN LOSS OF LOAD:

-> OPERATING HOIST DOWN, OPERATOR DOES NOT RELEASE "DOWN" PUSHBUTTON AND/OR IF RELEASED, PUSHBUTTON FAILS TO OPEN LOWERING CIRCUIT - LOWERING MOTION CONTINUES.

-> OPERATOR PRESSES "STOP" PUSHBUTTON, CONTACTS FAIL TO OPEN MAIN POWER CONTACTOR CIRCUIT, AND/OR MAIN POWER CONTACTOR FAILS TO OPEN POWER CIRCUIT.

-> LOWER TRAVEL LIMIT SWITCH FAILS TO OPEN LOWERING CIRCUIT - LOWERING MOTION CONTINUES, ALL WIRE ROPE IS UNSPOOLED FROM THE DRUM AND REVERSE WOUND BACK ONTO THE DRUM. HOIST CONTINUES TO RUN IN LOWERING MODE, BUT WITH ROPE REVERSE WINDING TO DRUM, LOAD BLOCK DIRECTION OF TRAVEL IS UP.

-> UPPER OVERTRAVEL LIMIT SWITCH FAILS TO OPEN MAIN POWER CONTACTOR CIRCUIT, AND/OR MAIN POWER CONTACTOR FAILS TO DISENGAGE.

IN THIS PRESUMED SEQUENCE, THE LOWER BLOCK ASSEMBLY WILL BE DRIVEN UNDER POWER INTO THE UNDERSIDE OF THE HOIST TROLLEY FRAME, WITH THE WIRE ROPE REVERSE WOUND ONTO THE DRUM. WIRE ROPE DAMAGE AND POSSIBLE SEPARATION WILL RESULT.