FAILURE MODED EFFECT ANALYSIS

NIS TECHNOLOGY SERVICE GROUP

Date April 16, 2008

Developed By: Crane Safety Associates of America, Inc.

Phillip S. Ezzell

The mobile Crane was inspected for ATK Purpose only for the Lift of the ALV motor. The Inspection was Visual per ATK Requirements.

Jim Heyden
6/25/08

TEREX | DEMAG

AC 140

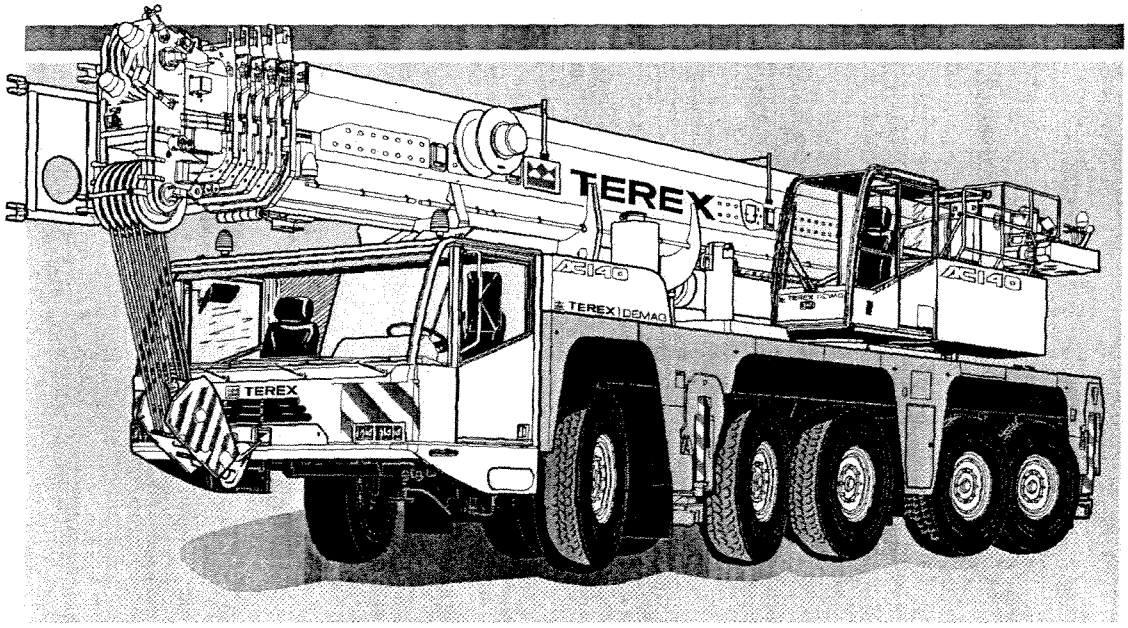

140t

INTRODUCTION

This analysis is based on the subject equipment being properly assembled and in the correct configuration to perform the work, set up according to manufacturer's specification including level state, proper cribbing, lubrication, fluids levels, and adjustments.

Since the specification for this analysis did not describe the crane configuration, the weight, radius, or height of the lift, several options will be analyzed.

Some illustrations will not be an exact match; however, they will contain the same components as described by the manufacturer.

HOOK BLOCK

INDEX

Pages

1..... Item Description

2..... Pictorial Diagram

3..... Itemization

Component Identification

1..... Bearing and Spacers

2..... Sheave

3..... Trunnion

4..... Becket Connection Point and Dead End Pressed End Socket

5.....Cheek Plate

6.....Through Shaft

7..... Shank Nut

8..... Bearing

SYSTEM DESCRIPTION

HOOK BLOCK

Hook blocks are used to increase hoisting efficiency on crane and hoisting systems by means of increasing the number of running wire ropes thought encase sheaves. Attached to the encasement or block is a single or multiple barb hooks. The hook provides a means to attach loads usually using suspension gear such as slings.

This crane comes with a variety of hook options that can be used based on the weight of the loads to be hoisted and the hoisting speeds desired. The description given for the analysis and inspection will apply to all hook block options. The only differences being the number of sheave and possibly a double hook verse a single hook.

The hook block will have a wedge socket connect located either on top or to one side of the block for the purpose of securing or dead ending the wire on the block when odd number of parts is required.

MANFACTURER:

TERREX – DEMAG

HOOK BLOOK OPTIONS:

TYPE 200-9/21-D 9 SHEAVES DOUBLE HOOK WEIGHT 1750 KG 1 OR 2 HD ATTACHMENTS (MAX 16 PARTS)

TYPE 100-7/21-D 7-HEAVES, MAX 13 FALLS, DOUBLE HOOK WEIGHT 1000 KG

TYPE 80-5/21-E 5-SHEAVES, MAX 11, SINGLE HOOK, WEIGHT 945 KG

TYPE 80-3/21-D 5- SHEAVES, MAX 11 FALLS, DOUBLE HOOK, WEIGHT 945 KG

TYPE 63-3/21-E 3-SHEAVES, MAX 7 FALLS, SINGLE HOOK, WEIGHT 700 KG

TYPE 63-3/21-D 3-SHEAVE, MAX 7 FALLS, DOUBLE HOOKS, WEIGHT 700 KG

TYPE 32-1/21-E 1- SHEAVE, MAX 3 FALLS. SINGLE HOOK, WEIGHT 550 KG

TYPE 32-1/21-D 1 SHEAVE, MAX 3FALLS, DOUBLE HOOK, WEIGHT 550 KG

TYPE 8-0/21-E HOOK SUPENSION GEAR, WEIGHT 250 KG

Component Identification

1..... Bearing Spacers and Sheaves

2..... Trunnion

3&4..... Becket Connection Point and Dead End and Pressed End Socket

5.....Through Shaft

6..... Shank Nut

7..... Hook

8..... Hook Safety Latch

9..... Wedged Socket (Becket)

10..... Press End Socket

Part # do not match w/ sketch next page

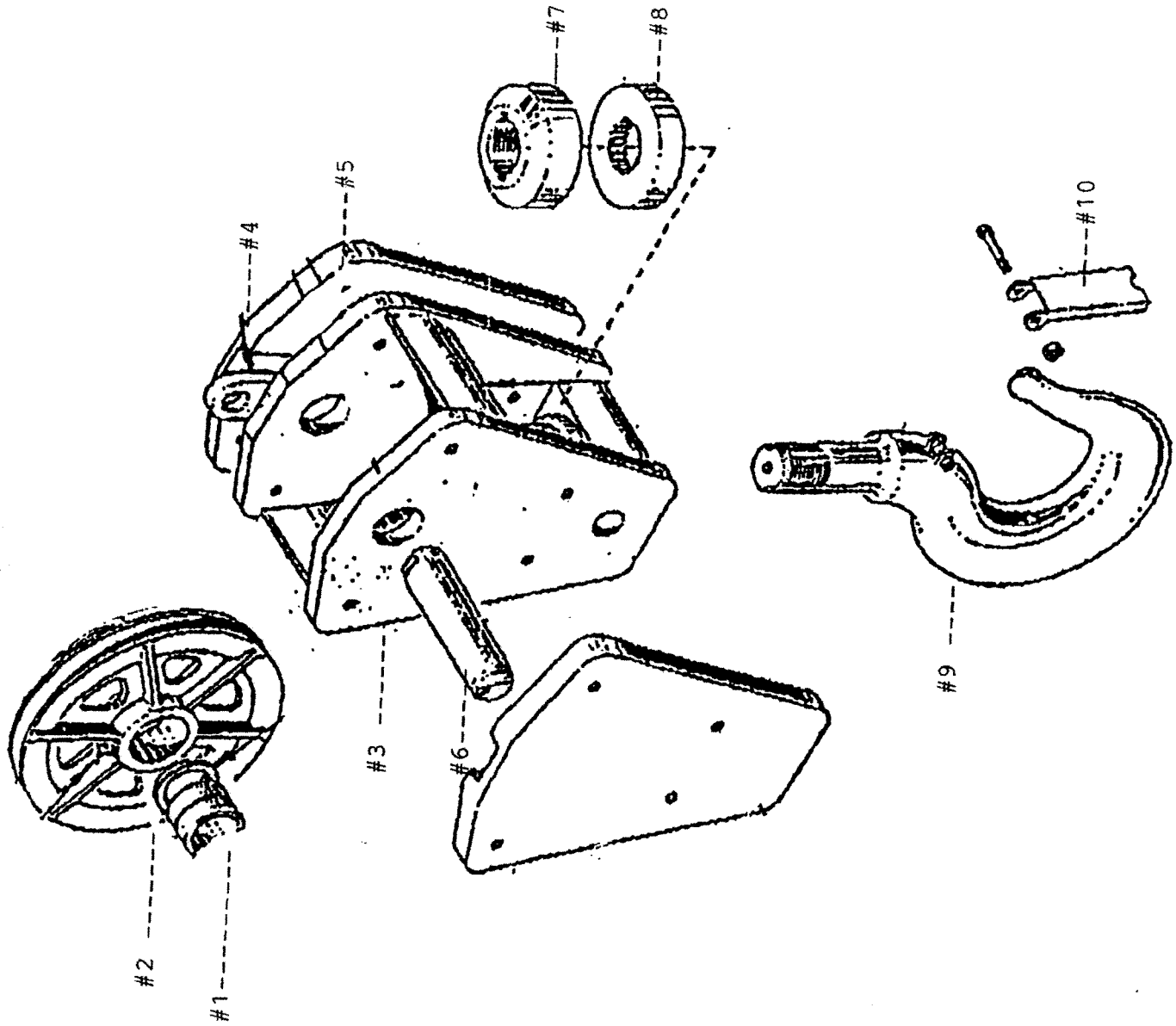

A

17.2.2 Hook blocks

(Z 50 696)

17.2.2.1 Definition

In DIN 15002 the hook block is defined as the "multiple line suspension of carrying equipment with a hook".

☞ *A single–line suspension would be referred to as a hook suspension gear. As this differentiation is not relevant for the following general contexts, only the description "hook block" is used.*

⚠ **Only hook blocks may be used which have been obtained from the crane manufacturer.**
The use of other hook blocks is only permitted following consultation with the crane manufacturer.

17.2.2.2 Markings

The following details must be permanently and legibly marked on hook blocks:

- Warning marking
- Manufacturer or supplier
- Year of construction
- Type, if type designation applies
- Factory or serial number
- Permitted load
- Rope diameter
- Drive group
- Dead weight.

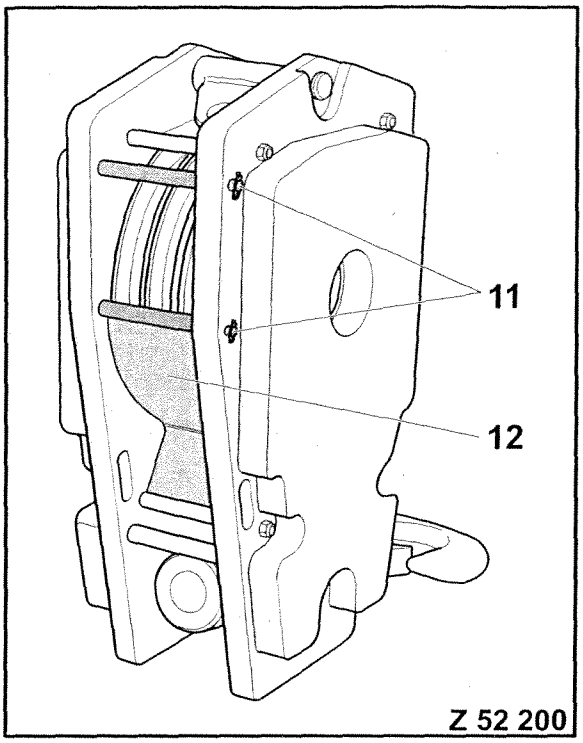
11
12
Z 52 200

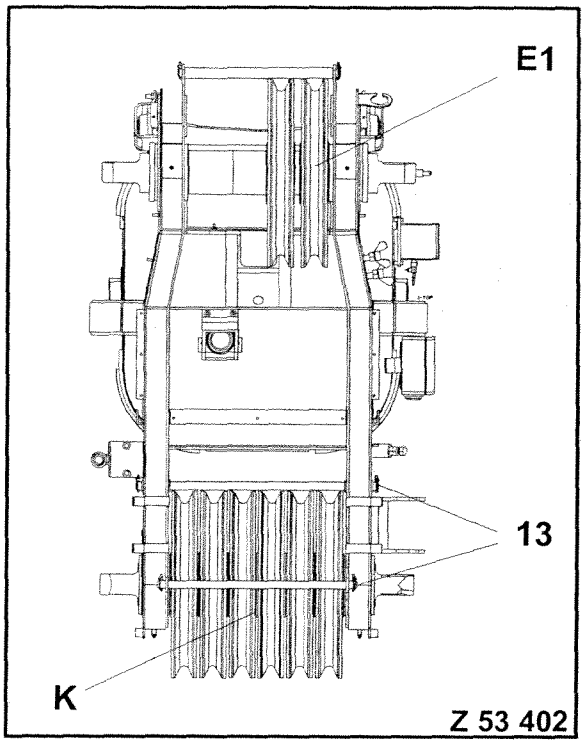
E1
13
K
Z 53 402

Rope end connection "without press fitting"

(Z 41 377, Z 200 177, Z 41 379, similar depiction)

The illustrations of the rope socket (1) and the cable clip (3) are principle drawings and do not correspond exactly with the components supplied by the crane manufacturer.
Use only original parts supplied by the crane manufacturer.

In order to fit the rope socket (1), first the free rope end is pulled through the conical rope pocket, laid in a loop and then pulled out of the rope pocket again. The rope key (2) is laid into the rope loop and the hoist rope is pulled through the rope socket (1), so that the free end juts out by approx. 8 times the width of the rope diameter. The free end must be secured against pulling using a cable clip (3) of the correct size.

Danger of the load and / or the hook block falling down!

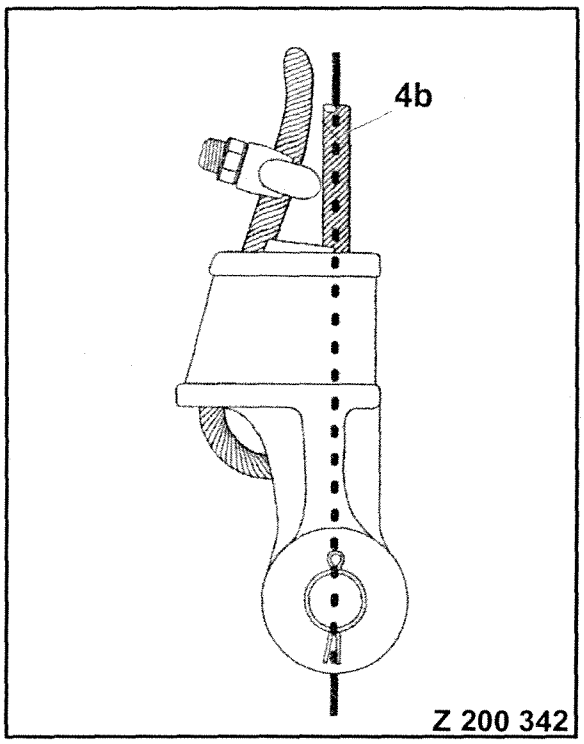
4b
Z 200 342

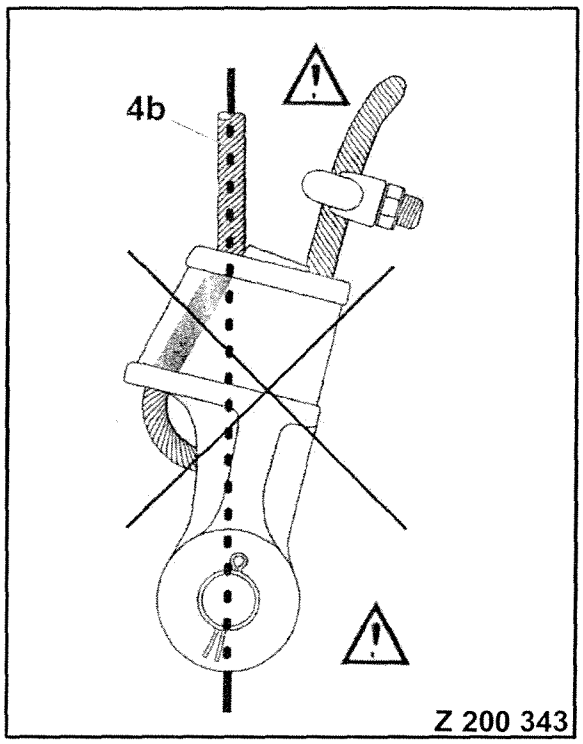
4b
Z 200 343

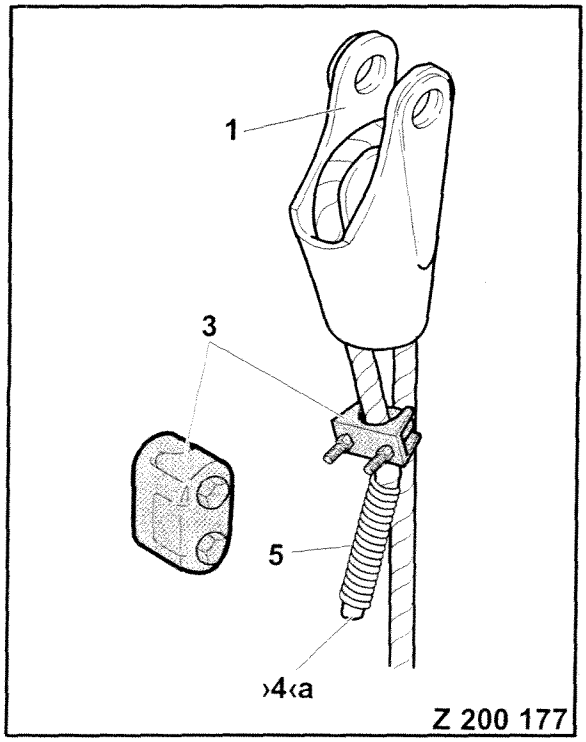
1
3
5
›4‹a
Z 200 177

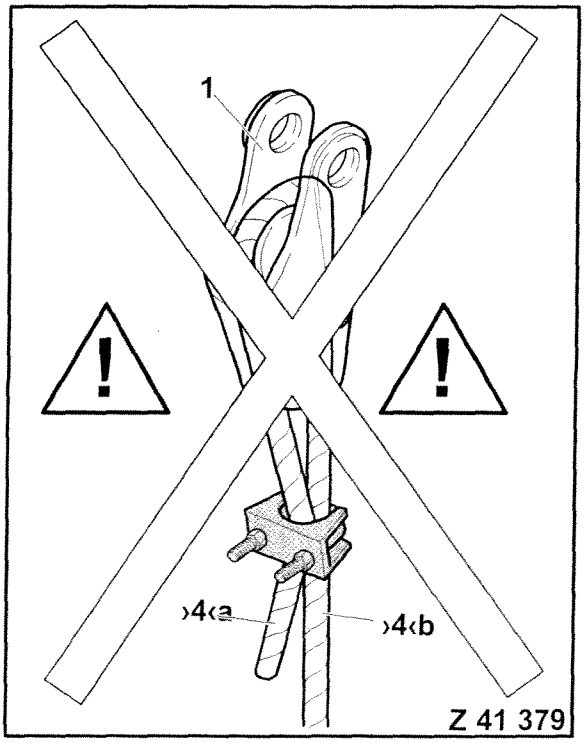
1
›4‹a
›4‹b
Z 41 379

Rope end connection "with press fitting"

(Z 41 375, Z 41 383, Z 41 384, similar depiction)

The rope end connector of the rope "hoist 1" comprises the following components (Z 41 375):

- the rope socket (1)
- the flap (2) with mushroom grip (4)
- the rope sleeve (3)

☞ *The rope sleeve (3) is a component of the hoist rope and is firmly fitted to it.*

- To secure the rope end, it is inserted in the rope socket (1) with the help of the fitted rope sleeve (3) and secured with flap (2).
- Before fitting the rope sleeve (3), fold up flap (2) with the help of mushroom grip (4) (Z 41 383).
- After fitting the rope sleeve (3), fold flap (2) into the "lock" position and insert the locking pin using the mushroom grip (4) (Z 41 384).

⚠ **Before reeving the rope "hoist 1" on the main boom, on the fly jib and on the main boom extension, all rope protection arrangements such as rollers or bolts on the reeved deflection and rope idlers must be removed or opened. If this is not done, the hoist rope with the attached rope sleeve cannot be drawn through, when reeving the hoist rope using the auxiliary reeving winch there is a risk of damage for the winch, the sheaves and the hoist and auxiliary reeving rope.**

F

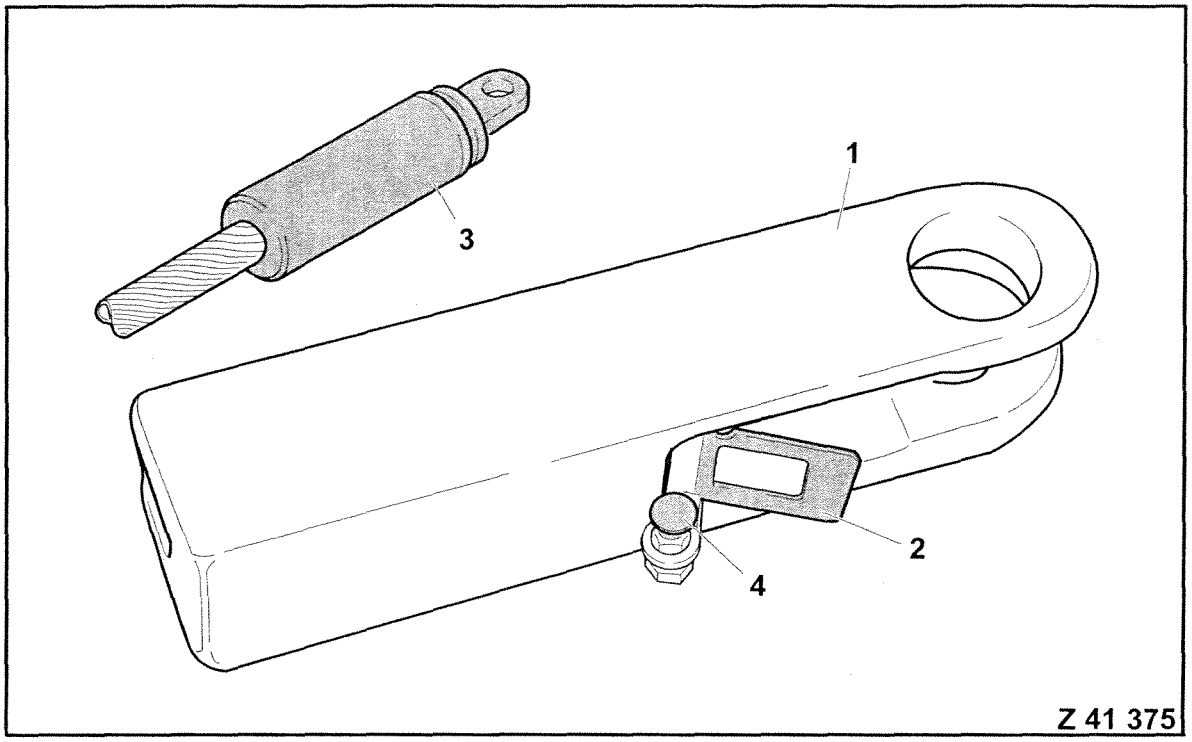
1
2
3
4
Z 41 375

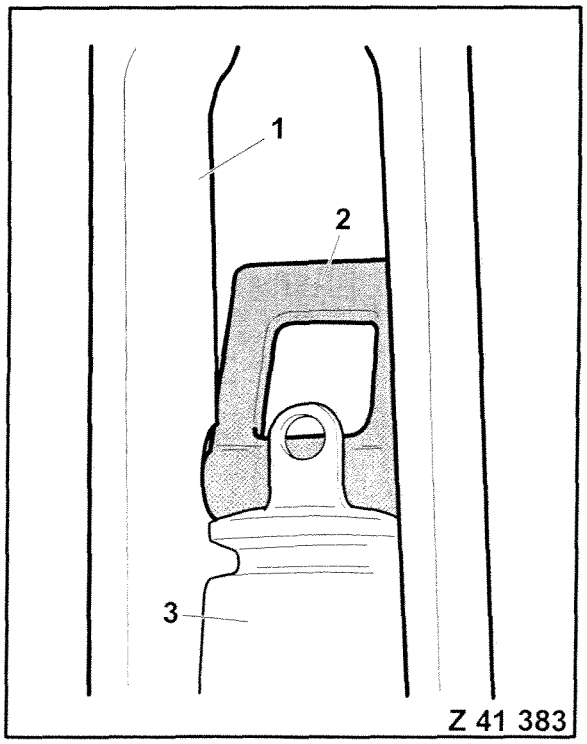
1
2
3
Z 41 383

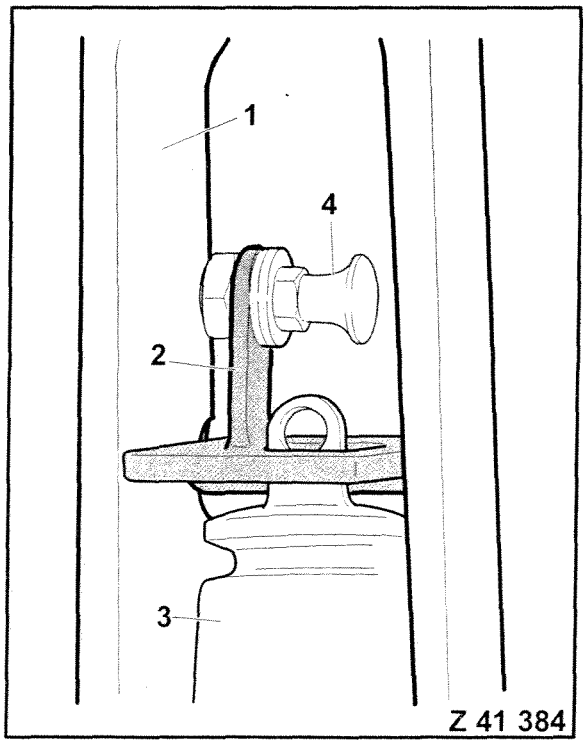
1
4
2
3
Z 41 384

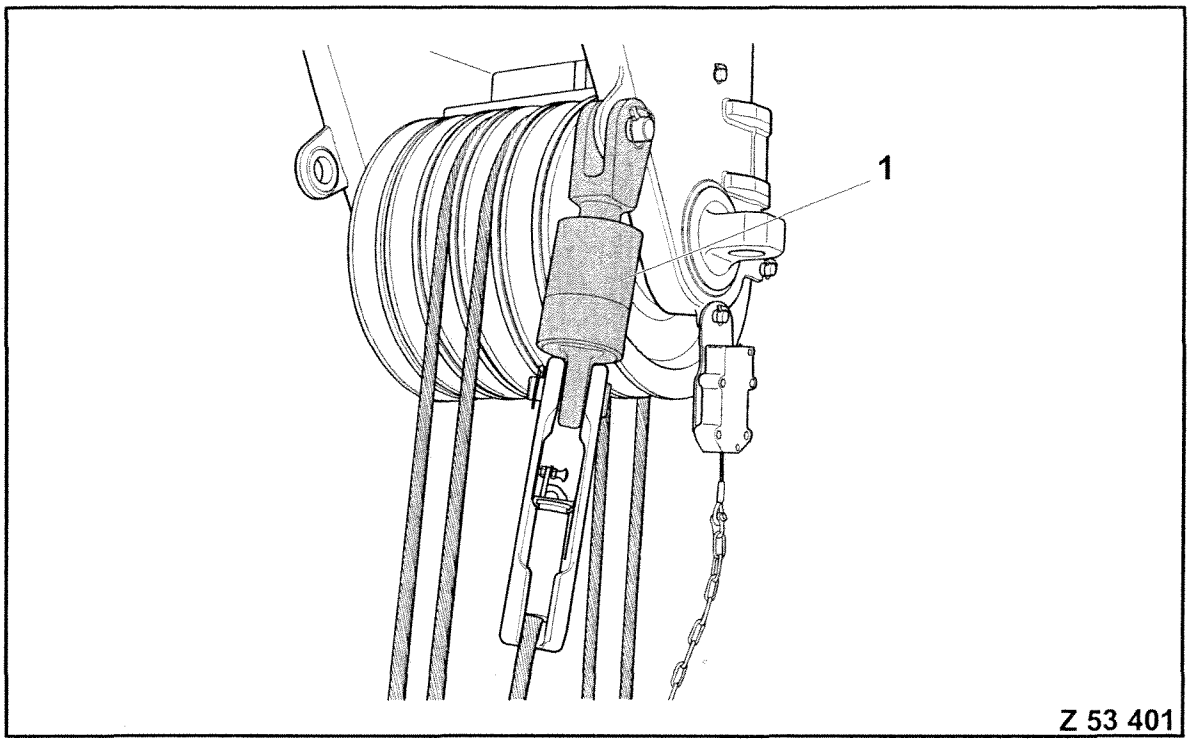
1
Z 53 401

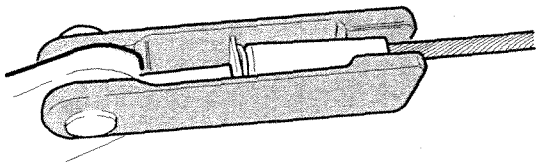

Z 55 368

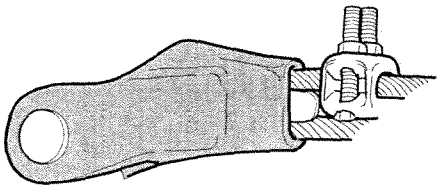

Z 55 369

INSPECTION AND ANALYSIS
(SINGLE POINT ANALYSIS)

BEARINGS SPACERS AND SHEEVES

Hoist Block Sheaves operate within the block and boom point with the assistance of spacers. Spacers separate the sheaves in order to provide a necessary even load on the boom head. The hook block maintained a like distance to allow for eccentric reeving as to not cause the boom head to twist which in the extreme could cause the boom to fail with loss of load.

Bearings allow sheaves to rotate with a minimum of friction or lateral movement or wobble. Defective sheave bearings may cause the sheaves to freeze causing eventual failure of the wire rope causing loss of load.

A visual inspection should be conducted by the crane operator, lift coordinator, or designated N.S.I. staff during the pre-lift meeting on the job site.

The inspection should consist of insuring that all sheaves are operating properly and no damage or excessive wear is present.

INSPECTION AND ANALYSIS
(Single Point Failures)

ITEM # 2 - TRUNNION

Trunnion failure would cause the upper portion of the hook block (containing the sheaves and through shaft) to separate from the lower portion of the hook block.

Complete failure of the trunnion portion of the hook block will result in total loss of load.

The trunnion should undergo a visual inspection by the crane operator, lift coordinator, or other designated personnel at the lift site, this portion of the block is difficult to effectively perform a visual inspection of the wear areas. Look for signs of looseness, freezing or sticking and wear. It is recommended to have the block disassembled for a NDT prior to the lift if it has not been done within the past 12 months. This item should be deemed passive before the lift is made.

6/25/08

sockets, proper length preparation of dead end on wedge sockets, on pressed end sockets check socket connector on rope for any signs of slippage, check the mushroom grip, flap, and sleeve for proper operation or damage.

This item will be deemed passive before proceeding with the lift. Inspection does not require disassembly.

6/25/08

INSPECTION AND ANALYSIS
(SINGLE POINT FAILURES)

ITEM # 5 - THROUGH SHAFT

The sheaves are held in place by a shaft that passes through the sheaves and attaches to the inner plates of the block housing. If the through shaft breaks the sheaves and the wire rope may fail or detach causing loss of load.

The hook block should be disassembled and inspected by the crane operator or mechanic in the absence of a recent NDT report or certification. If the inspection is to be visual, after the inspection by the crane operator and the authorize field representative and the lift coordinator, if deemed passive the block should be reassembled and documentation of the inspection provided to N.S.I.

Visual Inspection
A 6/25/08

INSPECTION AND ANALYSIS
(SINGLE POINT FAILURES)

ITEM # 7 - SHANK NUT

The Shank Nut holds the hook in the block assembly. Should the Shank Nut completely fail, the hook would separate from the hook block, resulting in loss of load.

A visual inspection of the Shank Nut will be performed by the crane operator, lift coordinator, and designated persons on the N.S.I. staff during the pre-lift meeting at the job site. Inspection should insure there are no distortion of the nut, cracks, and proper tightness to not prevent rotation of the hook. This item shall be deemed passive before the lift is made.

6/25/08

INSPECTION AND ANALYSIS
(SINGLE POINT FAILURE)

HOOK

The hook is the load bearing point of the hook block. Structural failure of the hook will result in loss of load.

The hook should undergo a visual inspection during the pre-lift meeting by the crane operator, lift coordinator and designated persons on the N.S.I. staff. The inspection can be performed on site and does not require disassembly.

The hook inspection should consist of looking for hairline cracks, spreading of the hook by more than 15% of the original throat opening, loss of 10% or more of the original hook material, twisting, evidence of heat damage such as welding.

H
6/25/08

WIRE ROPE

INDEX

Pages

1..... Item Description

2..... Pictorial

3.....Wire Rope Options

4 & 5..... ..... Failure Analysis & Inspection

ITEM DISCRIPTION

WIRE ROPE

The load line on this crane is designed specifically to be used as running wire rope. This means the rope is designed to travel through and around sheaves located within the hook block and the boom-point head to the hoist drums located on the superstructure.

The wire rope is designed to perform to the necessary bending, wear, and fatigue factors common in hoisting operations. It is made up of three main components, wires, strands, and a core rope usually IWRC. In order to meet U.S. standards the ropes must only be loaded to a fraction of the breaking strength or ultimate strength. Six and eight strand ropes shall work with a factor of safety of no less than 3:1. Rotation resistant rope shall work with no less than a fact or of safety of 5:1.

BRIDON

Wire Ropes for Construction Cranes

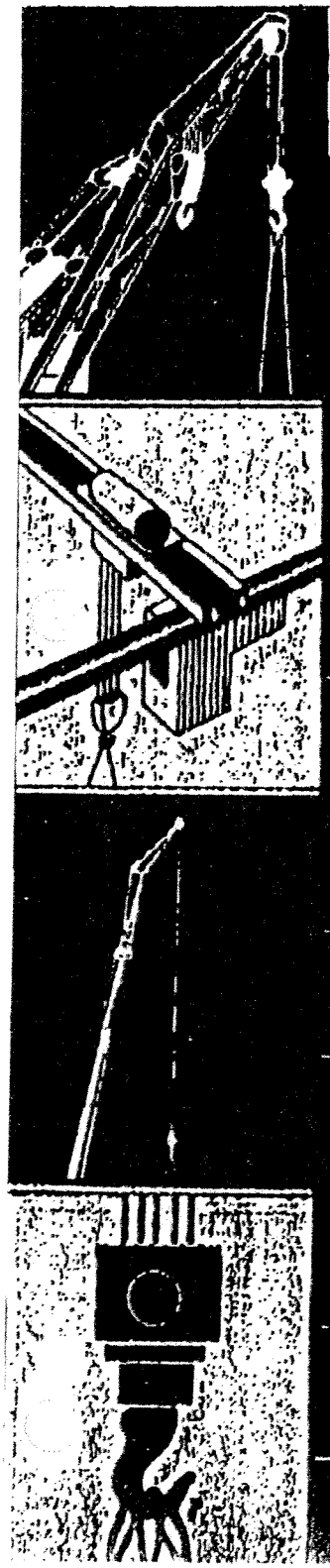

Crawler & Truck Cranes Overhead Cranes	Tower Cranes Electric Hoists
6 x 19 Warrington	Good flexibility and strength for applications requiring small diameter wire rope.
6 x 25 Filler Wire	Excellent flexibility with balance of abrasion and fatigue resistance.
6 x 26 Warrington Seale	Good balance of abrasion and fatigue resistance.
6 x 36 Warrington Seale	14 outside wires. More fatigue resistance, but less abrasion resistance than 6 x 25 rope.
6 x 41 Warrington Seale	16 outside wires. Good combination of fatigue and abrasion resistance for operating ropes.
8 x 19 Rotation Resistant Rope	Inner and outer strands are laid in opposing directions to counter rotation. More easily damaged in service than other ropes. Can be used for multiple part lifting.
19 x 7 Rotation Resistant Rope	Inner strands are left lang lay; outer strands are right regular lay, the natural rotation tendency of one layer is balanced by the other. Not recommended for multiple part lifting.
Dyform®-6	High density regular lay wire rope made with compacted strands. Meets or exceeds strength requirements of EEIPS rope. Provides better bending life, crush resistance and abrasion resistance than standard 6-strand rope.
Dyform®-18 HSLR Rotation Resistant Ropes	Dyform construction with outer and inner strands laid in opposite directions gives superior rotation resistance. Dyform®-18 HSLR is up to 35% stronger than 19 x 7 rope. May be used for multiple part lifting.
Dyform® 34LR	Strongest, most rotation resistant of all rotation resistant wire ropes; used for the most demanding hoisting applications, primarily on tower cranes.
Endurance 35LS	High strength, very low rotation; for most tower crane applications.

High Performance Wire Ropes

Dyform®-18 and Dyform®-18 HSLR Rotation Resistant Ropes

* S.P.F

Dyform®-6

Dyform®-18 HSLR Rotation Resistant Rope		
Diam., in.	Nominal Strength*, Tons	Approx. Wt./Ft., lb.
3/16	8.3	.27
5/32	11.2	.37
1/4	14.6	.51
5/16	18.5	.64
3/8	22.7	.79
7/16	32.4	1.1
1/2	43.8	1.5
1	57.5	2.0
1 1/8	71.5	2.5
1 1/4	87.9	3.1

Dyform®-6		
Diam., in.	Nominal Strength*, Tons	Approx. Wt./Ft., lb.
3/16	8.8	.31
5/32	11.9	.39
1/4	16.3	.49
5/16	19.3	.63
3/8	22.7	.78
7/16	32.4	1.13
1/2	43.8	1.54
1	57.5	2.00
1 1/8	71.5	2.54
1 1/4	87.9	3.14
1 3/8	106.0	3.80
1 1/2	125.0	4.50

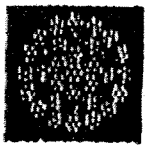

Dyform® 34LR

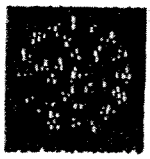

35LS

Dyform®-34LR and 35LS Rotation Resistant Rope							
Diameter		Minimum Breaking Force Tons (2000 lbs.)				Approx. Wt./Ft., lb.	
		1960 n/mm²ung		2160 n/mm²ung			
mm	in.	34LR	35LS	34LR	35LS	34LR	35LS
13	1/2	16.19	14.27	18.21	15.90	.54	.50
14	9/16	18.88	16.52	21.10	18.55	.64	.58
16	5/8	25.18	21.69	28.21	24.39	.84	.77
17		27.20	24.28	30.46	27.20	.92	.88
17.5		28.77	26.46	32.22	29.64	1.01	.91
18		30.80	27.09	34.62	30.40	1.05	.97
19	3/4	34.51	30.91	38.67	34.62	1.16	1.09
20		38.39	33.61	42.94	37.77	1.28	1.19
22	7/8	46.65	41.36	52.38	46.42	1.57	1.44
24		55.64	49.34	62.38	55.41	1.81	1.73
26	1	66.09	57.77	74.18	64.74	2.16	2.05
28	1 1/8	75.98	66.99	85.20	72.61	2.53	2.37
30		86.11	[illegible]	[illegible]	[illegible]	[illegible]	[illegible]

MANUFACTURER:

UNKNOWN

TYPE: ONE OF THE FOLLOWING

6 X 19 IWRC FS 3.5:1
6 X 25 IWRC FS 3.5:1
8 X 25 IWRC FS 3.5:1
8 X 19 IWRC FS 3.5:1
DYFORM-18-HSLR FS 5:1

SPECIFICATIONS:

DIAMETER UNKNOWN

WEIGHT UNKNOWN

LENGTH -

BREAKING STRENGTH KNOWN

INSPECTION AND ANALYSIS
(SINGLE POINT FAILURE)

Inspection and maintenance of the load cable is an ongoing process.

The load cable (wire rope) is constantly monitored for signs of fatigue, wear, broken wires, valley wire breaks, flat spots, kinks, broken strands, and bird caging.

The inspection minimum standard for wear is based on the diameter of the rope. For example, a one inch wire rope must be removed from service when it has lost 3/16 of its diameter. It must also be removed when it has loss 1/3 of the diameter of the outside strand wires.

Six and eight strand ropes must be removed when six randomly broken wires are present in one rope lay or three broken wires in one strand in a rope lay. A rope lay is the distance it takes for one rope strand to travel 360 around the rope.

Rotation resistant rope must be removed when two broken wires are present within six rope diameters and four broken wires are present within 30 rope diameters.

Failure of the load cable will result in loss of load.

6/25/08

A visual inspection by operator, lift coordinator, and designated persons of the N.S.I. staff is paramount. The load cable will be deemed passive before the lift is made. No disassembly is necessary however the rope (load block) may need to be lowered to check the underlying wraps on the hoist drums.

6/25/08

BOOM LIFT GROUP

INDEX

Pages

1..... Item Description

2..... Specifications &Pictorial

3 &4..... Failure Analysis & Inspection

ITEM DESCRIPTION

BOOM

The Hydraulic Boom component of a mobile hydraulic truck crane serves several purposes. The boom is cantilever type which consists of several telescoping boom sections. The sections are moved inward and outward in a designated sequence by means of hydraulic linear actuators (cylinders). The boom provides the means to support the load line and hook block over the load to be lifted. It also allows the tip height and working radius to be adjusted as desired.

MANUFACTURER: DEMAG

TYPE:

HYDRAULIC

TELESCOPIC

TWO WAYS

SPECIFICATION:

CAPACITY: 140 ton

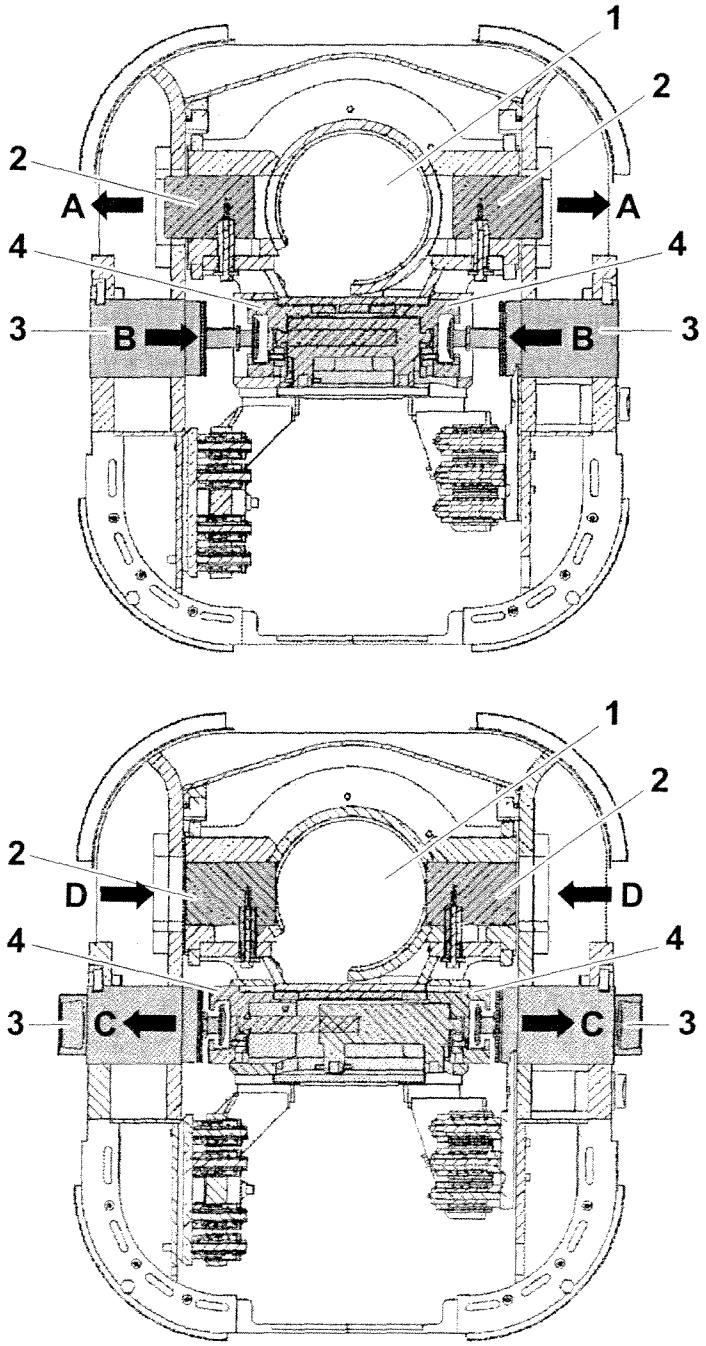

Z 200 036

12 Telescoping

12.1 General

(Z 54 716, Z 54 717)

"Telescoping" means retracting or extending the main boom.

The main boom consists of a basic case and five telescopic sections.
When fully retracted, the main boom is 12.5 m long, when fully extended it is 60 m. All telescopic sections must always be **pinned** at these and all other working lengths.
This means that each boom section is locked to the next largest boom section by a spring-loaded pin or bolt (3) on the left-hand and right-hand side at the rear.

☞ *There are also load capacities in the unpinned condition. Refer to section 12.4.1 "Lifting Capacity at Intermediate Conditions", starting at page 63.*

All **five** telescopic sections are retracted and extended using the following elements:

- – a telescoping cylinder (1), which is fastened to the back of the basic case.
- a safety and locking unit **"LPU"** (5) attached to the cylinder pipe.
  It is connected with the top of the piston rod of the telescoping cylinder via a pulling frame (6) and is therefore moved as soon as the telescoping cylinder is moved.
- – the LPU is activated via two hydraulic cylinders.

⚠ **When retracting and extending, there is a risk of crushing at the bearing points of the telescopic sections. Persons must therefore remain clear of the danger zone.**

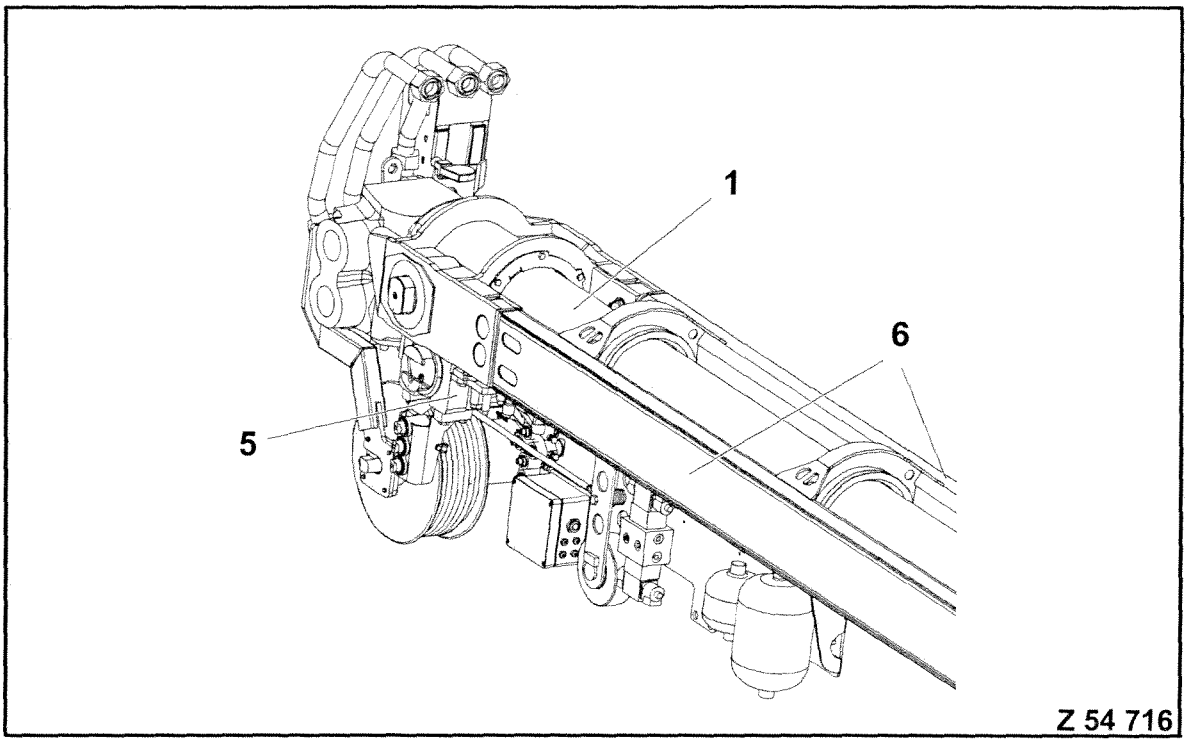
1
6
5
Z 54 716

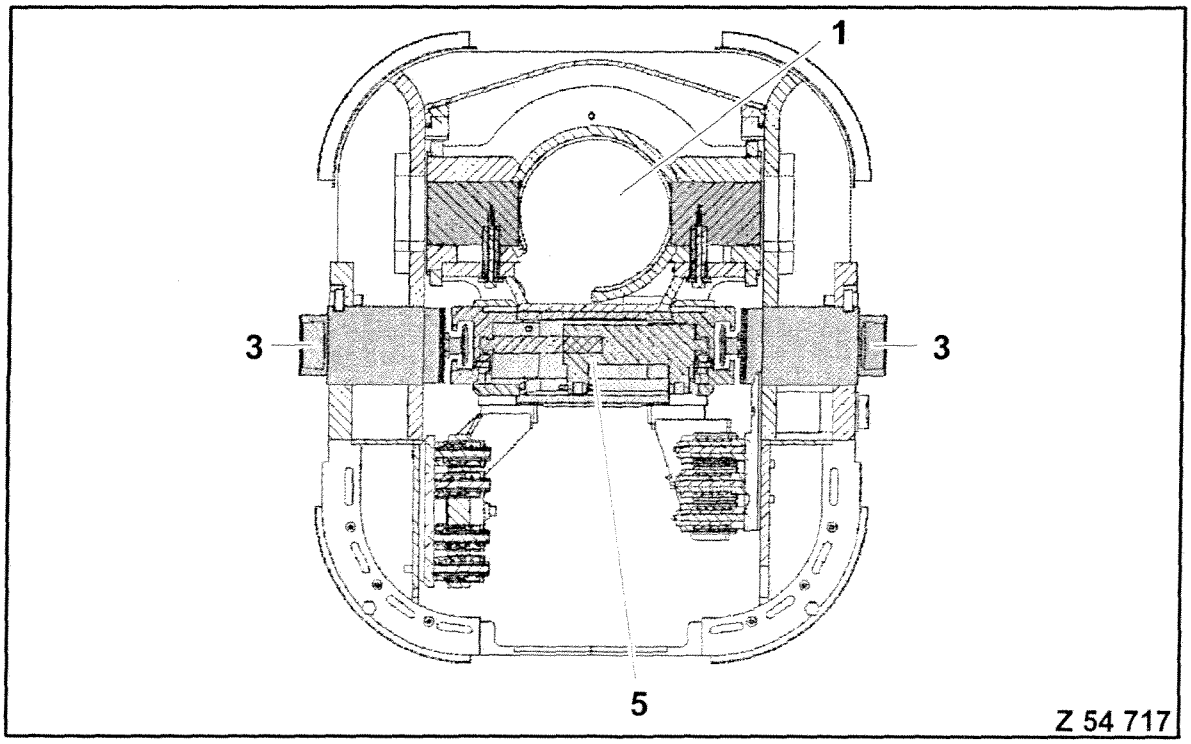
1
3
3
5
Z 54 717

INSPECTION AND ANALYSIS
(SINGLE POINT FAILURE)

BOOM LIFT CYLINDER ASSEMBLY
MAIN BOOM ASSEMBLY

The Boom Lift Cylinder Assembly is a two way double acting hydraulic ram that enables the crane boom to be raised and lowered to a desired angle.

Should mechanical failure occur in the boom lift cylinder, the operation of the boom function would be impaired. Should structural failure occur and the cylinder burst or breaks so that one section could separate from the other the boom could fail causing loss of load. Should the booms heel pins seize the boom could twist causing failure and loss of load.

A visual inspection by the operator, lift coordinator and designated N.S.I. during the pre-lift meeting should be performed.

Inspection should require a visual examination of the main boom heel pin that attaches the boom to the superstructure. The heel pins should not be rotating with movement of the boom. Any physical damage visible on the outer skin of the boom sections should be compared to manufacturers allowed tolerances.

6/25/08

INSPECTION AND ANALYSIS
(SINGLE POINT FAILURE)

This Crane has multiple telescoping sections for the purpose of extending or retracting the boom. Structural failure of any boom section will cause loss of load. The boom is extended hydraulically and should the hydraulic system fail the boom would remain unchanged, except for the unlikely event of a hydraulic cylinder structural failure.

The boom section should be visually inspected at the pre-lift meeting by the crane operator, lift coordinator, and designated persons on the N.S.I. staff.

The inspection should consist of visually checking to insure all sections are telescoping in the manufacturers required sequence, there is no physical deterioration to the sections. The boom is straight when deployed at working length (twisting, leaning act.)

6/25/08

BOOM NOSE GROUP

INDEX

Pages

1..... Item Description

2..... Specifications &Pictorial

3 &4..... Failure Analysis & Inspection

ITEM DESCRIPTION

The Boom Nose is located at the outer most end of the telescopic boom. The standard boom point contains 5 sheaves that can be used for up to 10 parts of line. For heavy lifting requiring more than 10 parts additional sheave assemblies can be attached beneath the standard Boom Nose.

The boom nose is also equipped to accept a lattice boom extension.

MANUFACTURER;

TERREX – DEMAG

TYPE:

FIXED

MULTI PART

LATTICE EXTENSION COMPATABLE

CAPACITY

TWO HOIST LINES

16 PARTS

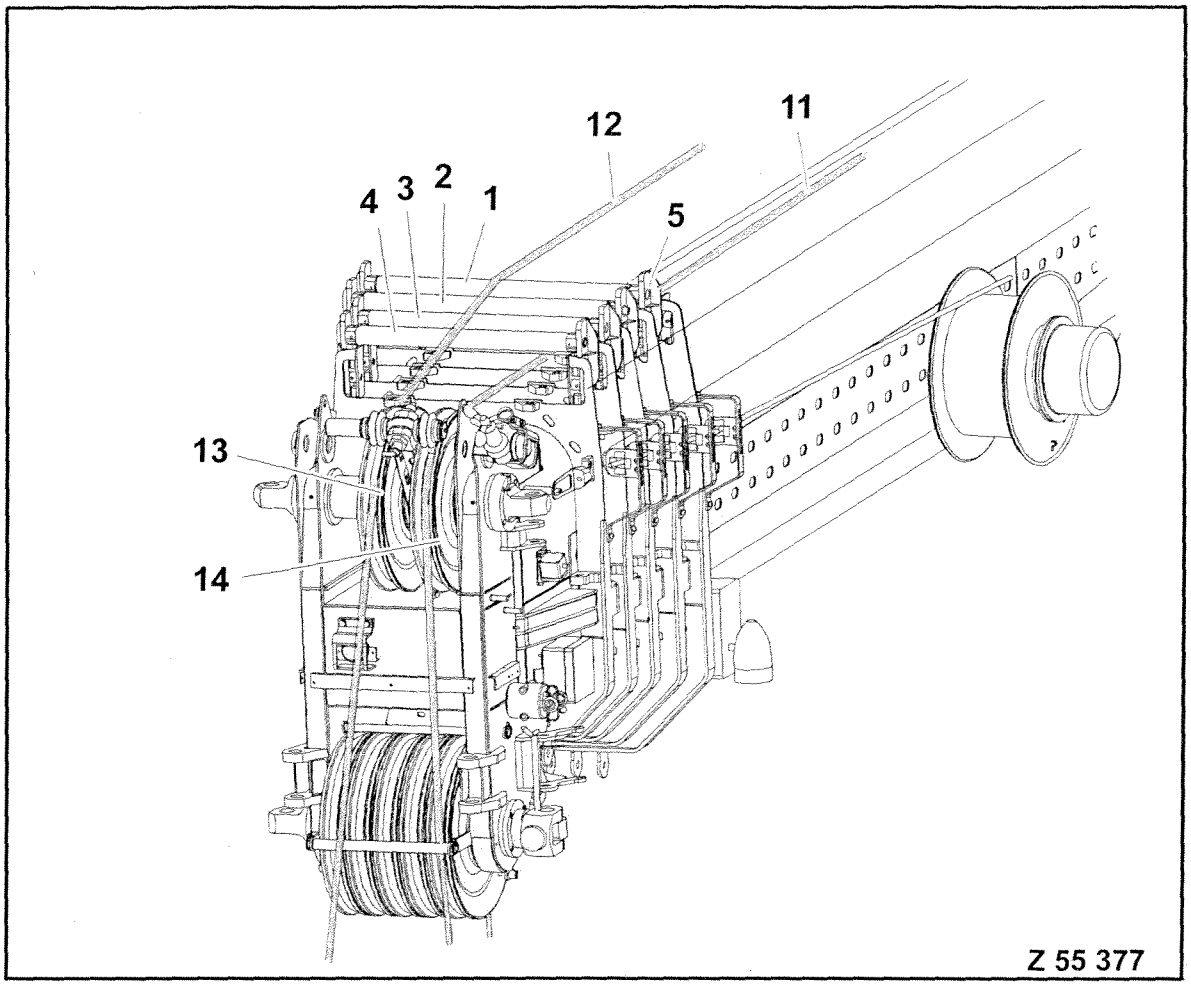

2-2

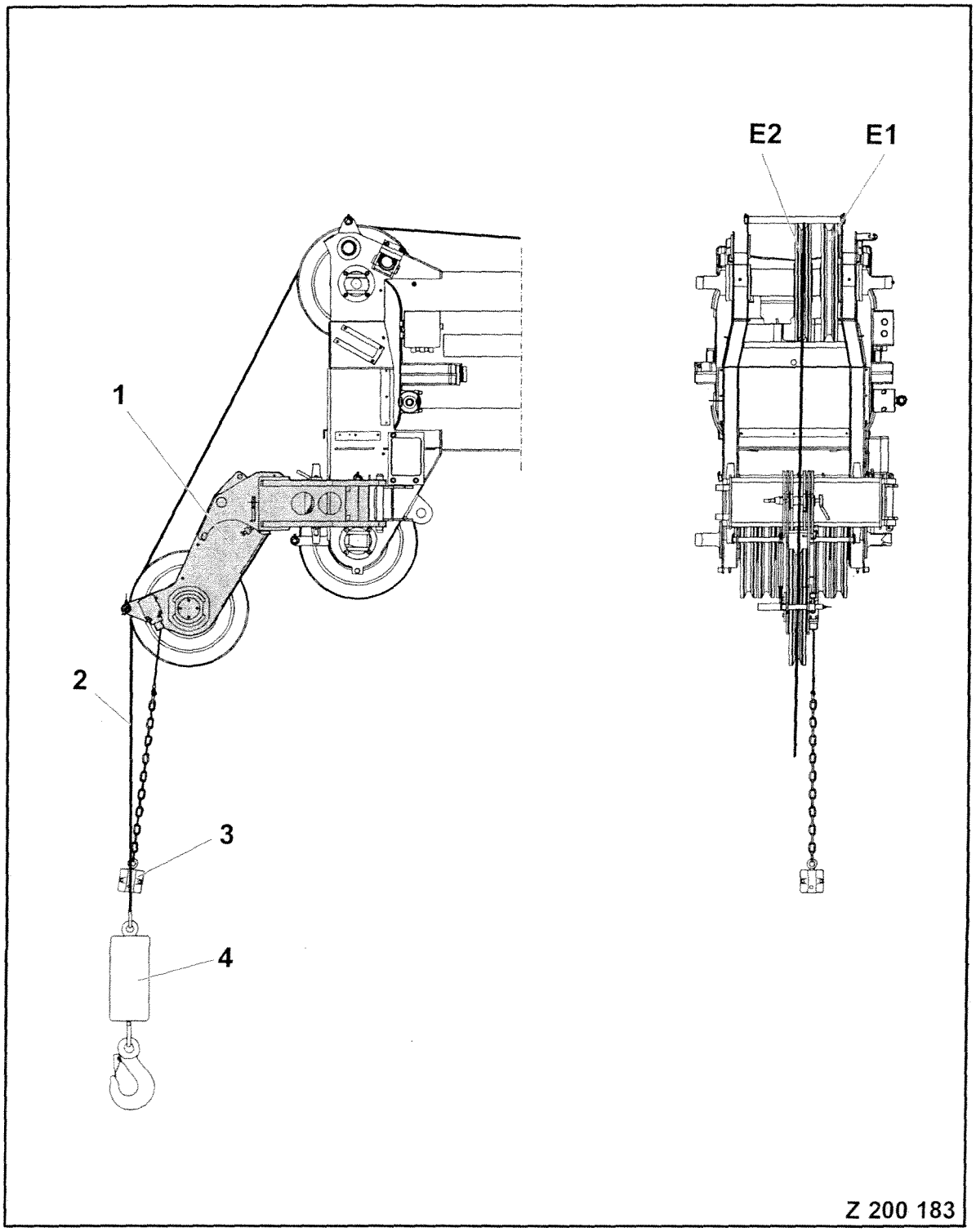
E2
E1
1
2
3
4
Z 200 183

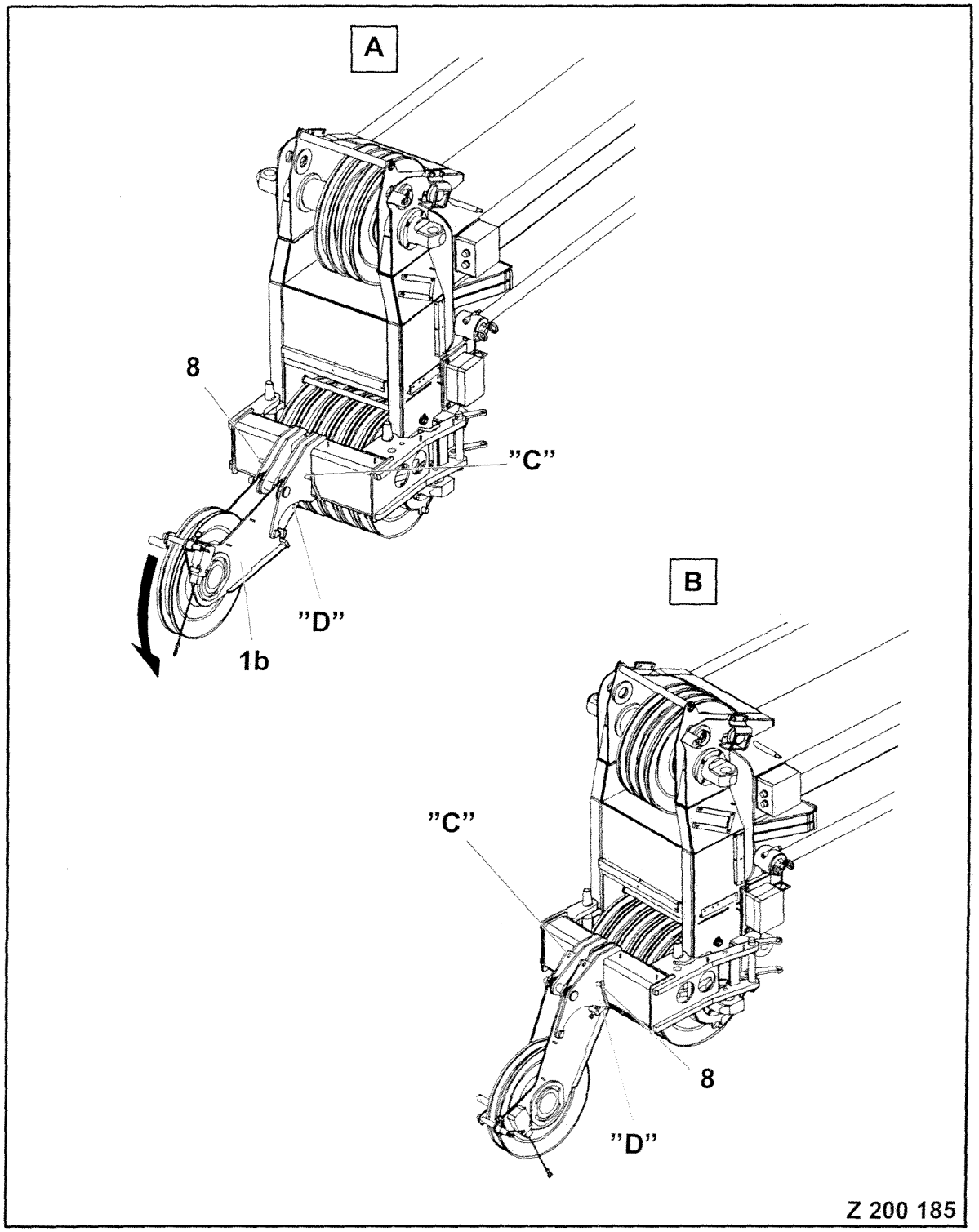
A
8
"C"
"D"
1b
B
"C"
8
"D"
Z 200 185

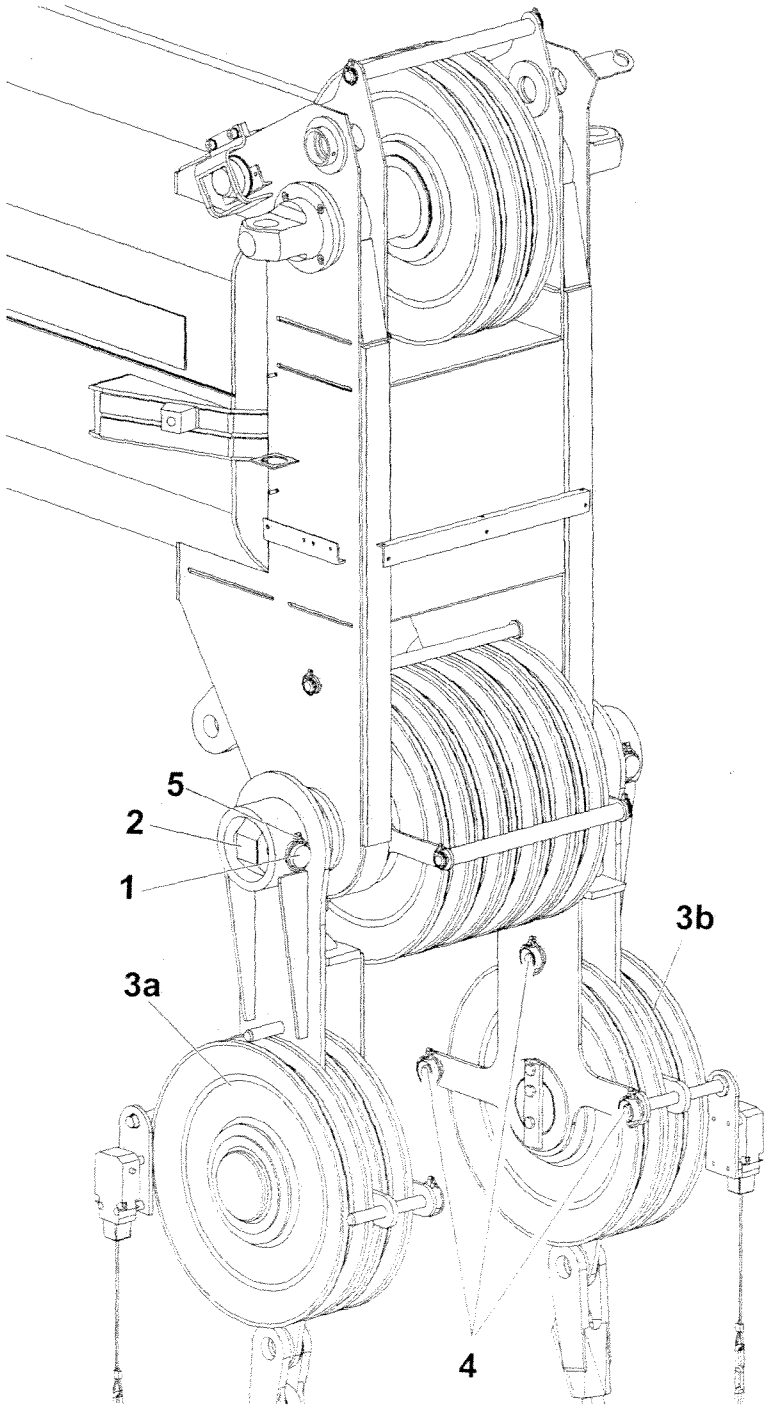

Z 55 367

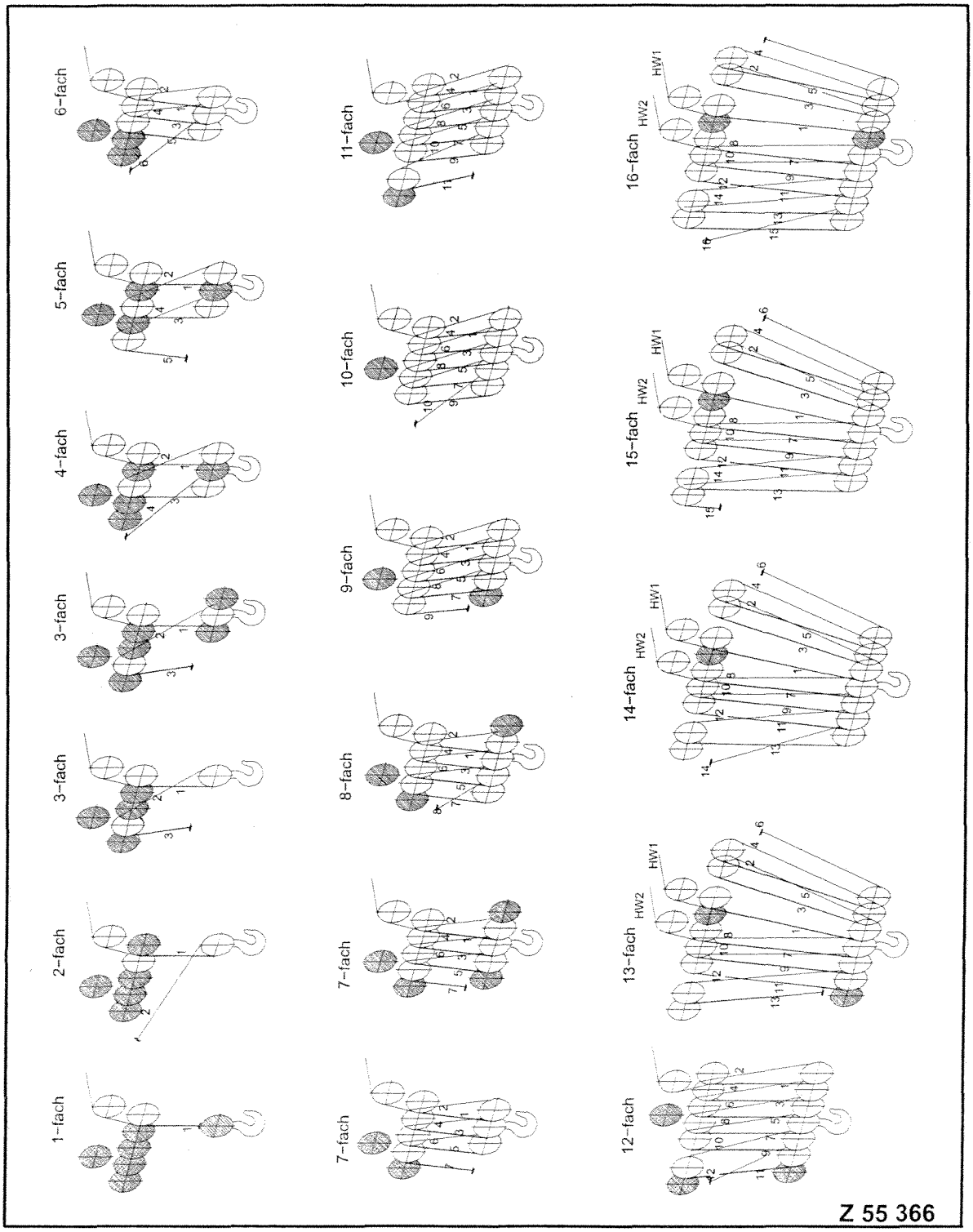
1-fach
2-fach
3-fach
3-fach
4-fach
5-fach
6-fach
7-fach
7-fach
8-fach
9-fach
10-fach
11-fach
12-fach
13-fach
14-fach
15-fach
16-fach
HW1
HW2
Z 55 366

INSPECTION AND ANALYSIS

UPPER SHAFT

The Upper Shaft holds the upper sheave assembly in the Boom Nose. Failure of this shaft will not cause loss of load but will allow the load to drop one to two feet.

This shaft should be visibly inspected by the crane operator, lift coordinator and designated person on the N.S.I. staff.

The inspection should include examination of all guards and pins, checking sheaves for vibration or wobble, insuring no unauthorized repair has been conducted. Disassembly is not required for this inspection.

6/25/08

INSPECTION AND ANALYSIS

LOWER SHAFT

The lower shaft holds the lower (main) sheave assembly in the Boom Nose. Lifts involving multiple falls up to 10 parts can be used with the sheave assembly mounted on the lower shaft. Failure of the lower shaft will cause loss of load by allowing the lower sheaves to escape the Boom Nose and the load cable to unreeve itself.

The inspection of this shaft should insure that all pins and cable guides are in place. Sheaves should turn freely and not exhibit vibration or wobble. The Boom Nose should be free from distortions and not exhibit signs of welding modifications or unauthorized repairs.

This item should be inspected by the operator, the lift coordinator, and the designated N.S.I. person at the pre lift meeting. Disassembly is not required.

6/25/08

HOIST GROUP

INDEX

Pages

1..... Item Description

2 &3..... Specifications &Pictorial

4 &5..... Failure Analysis & Inspection

TEREX-DEMAG HOISTING SYSTEM

The Terex-Demag crane utilizes a hydraulically controlled hoist system. Failure of any one single internal component can not cause loss of load. Power to the winch is supplied by an attached hydraulic motor. A combination of hydraulic and electrical power must be present or the load will remain stationary. The winch uses a disc-type brake that is pressure released.

The winch engages a sprag clutch to cause a planetary gear system to operate the winch in the up or down direction. The spag clutch can not engage in the absence of pressure. Should engine, pump, piping, valve, or electrical failure occur, the sprag clutch will not be engaged, the brake will not release, and the hoist and or load will be held stationary.

The planetary system consists of a single gear (sun gear) that powers the hoist and drum in the upward direction. In order to lower the load, the sprag clutch is engaged to hold a series of free floating or rotating gears (planetary gears) in a stationary position. This causes the planetary gears to drive the winch drum in the down direction.

Should the disc-brake fail the load will not move due to the above system. The brake provides a holding function and is not intended to provide a controlling function. Load control and speed is provided by control valves that regulate pressure and flow of the hydraulic fluid. With brake failure in the stationary position the load could not move without the control valves failure and then due to restricted flow ports or detents, the load would lower slowly. While in motion the load is controlled by hydraulic

pressure in both the up and down positions and the load will remain stationary when the operator returned the control lever to the neutral position closing the control valve.

If electrical failure should occur the system will not operate due to the cranes load moment indicator. The LMI controls all crane actions and will not allow electrically operated pilot valves to open.

Should hydraulic lines or piping or pumps fail the loss of pressure and flow will render the hoist inoperative.

Modern hydraulic mobile cranes do not have redundant braking systems such as those found on overhead traveling cranes or gantry cranes. The design of hydraulic hoist makes them unnecessary.

27572812_ EM HW1 I=54 MIT D21 1770 P14100

TEREX DEMAG

MOUNTING HOIST GEAR 1

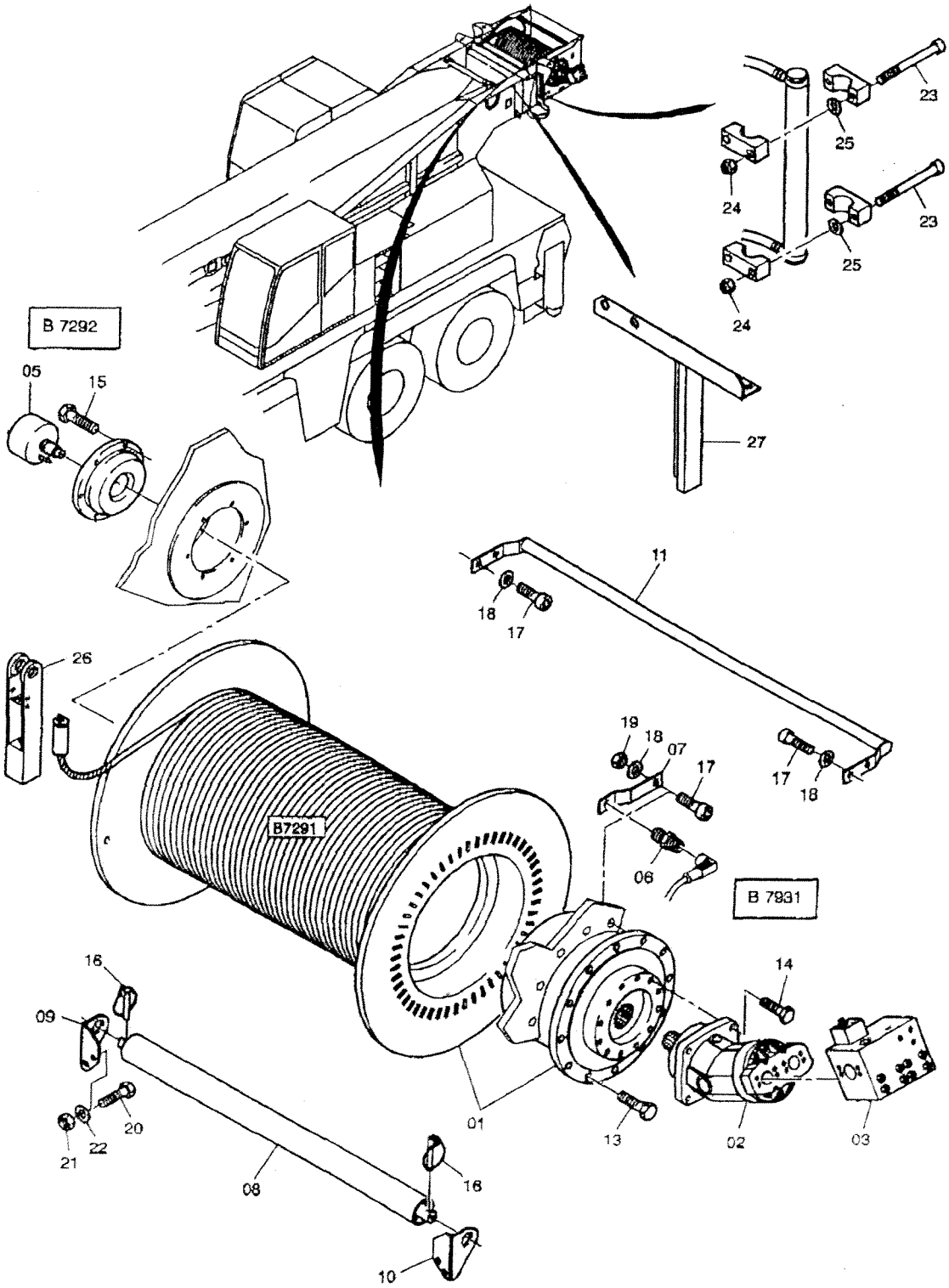

27572812_ EM HW1 l=54 MIT D21 1770 P14100

TEREX DEMAG

MOUNTING HOIST GEAR 1

Pos	Ident	Idx	Menge Amount	Text
01	27572912	_	1	VM HW l=54 MIT SEIL D21 1770 305M U FITT
				PRE ASSEMBLY HOIST GEAR WITH ROPE/FITTIN
02	27572712	_	1	VERSTELLMOTOR A6VM 140 HD2D/63W-VZB 010B
				A6VM 140 HD2D/63W-VZB 010B
03	27434012	_	1	SENKBREMSVENTIL CINDY 25B
				LOWERING BRAKE VALVE CINDY
05	64596240	_	1	SCHLEIFRINGKOERPER GEKAPSELT
				ROTARY JOINT HOIST
06	00220012	A	1	INDUKTIONSSCHALTER
				INDUCTION SWITCH
07	61294940	_	1	LAGERUNG
				SUPPORT
08	59105140	C	1	TRAGROLLE
				TOP ROLLER
09	30202412	_	1	LAGERHALTERUNG
				BEARING SUSPENSION
10	30202512	_	1	LAGERHALTERUNG
				BEARING SUSPENSION
11	66936840	_	3	SEILROLLENSCHUTZ
				ROPE PROTECTION
12	58853340	A	1	ZT HW-SEILBEFESTIGUNG FUER SEIL D21
				ROPE FIXING HOIST GEAR
13	51007098	_	11	SECHSKANTSCHRAUBE
				HEXAGON SCREW
14	50983498	_	4	SECHSKANTSCHRAUBE
				HEXAGON SCREW
15	12520499	_	6	SECHSKANTSCHRAUBE
				HEXAGON SCREW
16	55105240	_	2	KLAPPSTECKER
				FORE LOCK

27572812_ EM HW1 I=54 MIT D21 1770 P14100

TEREX DEMAG

MOUNTING HOIST GEAR 1

Pos	Ident	Idx	Menge Amount	Text
17	51043298	_	14	ZYLINDERKOPFSCHRAUBE
				CYLINDER HEAD BOLT
18	34050799	_	14	SCHEIBE
				DISC
19	50986298	_	2	SECHSKANTMUTTER
				HEXAGON NUT
20	51068598	_	4	SECHSKANTSCHRAUBE
				HEXAGON SCREW
21	50990898	_	4	SECHSKANTMUTTER
				HEXAGON NUT
22	34047099	_	4	SCHEIBE
				DISC
23	31913699	_	4	ZYLINDERKOPFSCHRAUBE
				CYLINDER HEAD BOLT
24	50986998	_	4	SECHSKANTMUTTER
				HEXAGON NUT
25	34050699	_	4	SCHEIBE
				DISC
26	14874912	_	1	SEILTASCHE FUER SEIL D21
				ROPE TASCHE FOR ROPE D21
27	24073312	_	1	HALTER HY ROHRE
				BRACKET HYD TUBES
28	12502199	_	2	SECHSKANTMUTTER
				HEXAGON NUT

27572912_ VM HW I=54 MIT SEIL D21 1770 305M U FITT PRE ASSEMBLY HOIST GEAR WITH ROPE/FITTIN

TEREX DEMAG

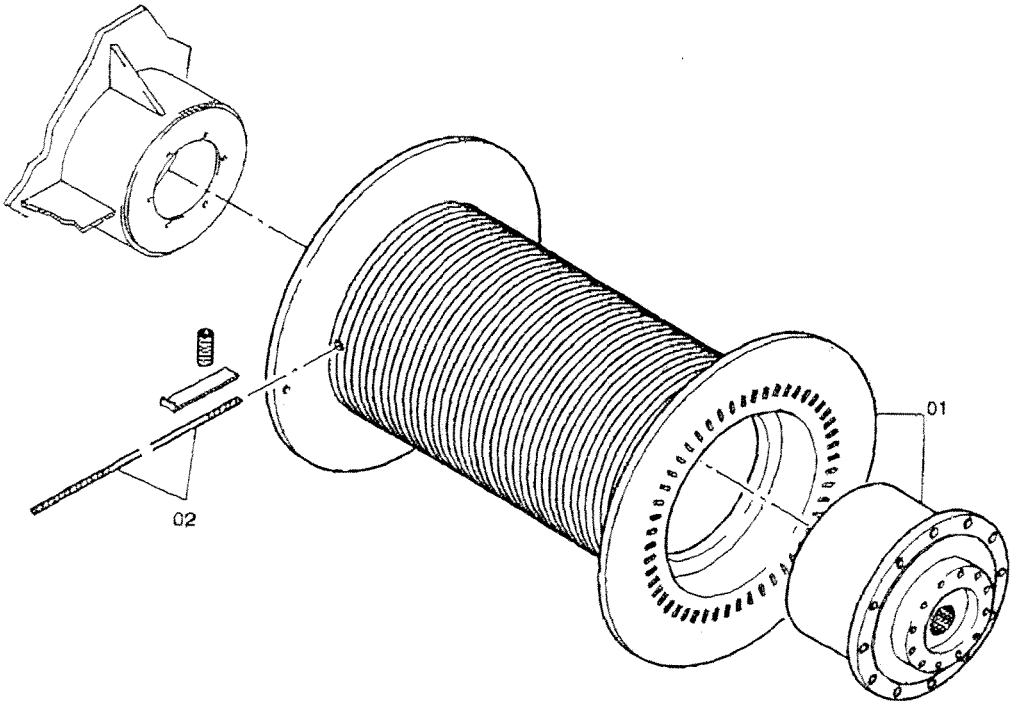

27572912_ VM HW I=54 MIT SEIL D21 1770 305M U FITT

TEREX DEMAG

PRE ASSEMBLY HOIST GEAR WITH ROPE/FITTIN

Pos	Ident	Idx	Menge Amount	Text
01	24092412	_	1	HUBWERK KPL MIT I=54
				HOIST GEAR ASSY.
02	22760812	_	1	SEIL D21 1770 305M MIT FITTING
				ROPE D21 1770 305M WITH FITTING

24092412_ HUBWERK KPL MIT I=54

HOIST GEAR ASSY.

TEREX DEMAG

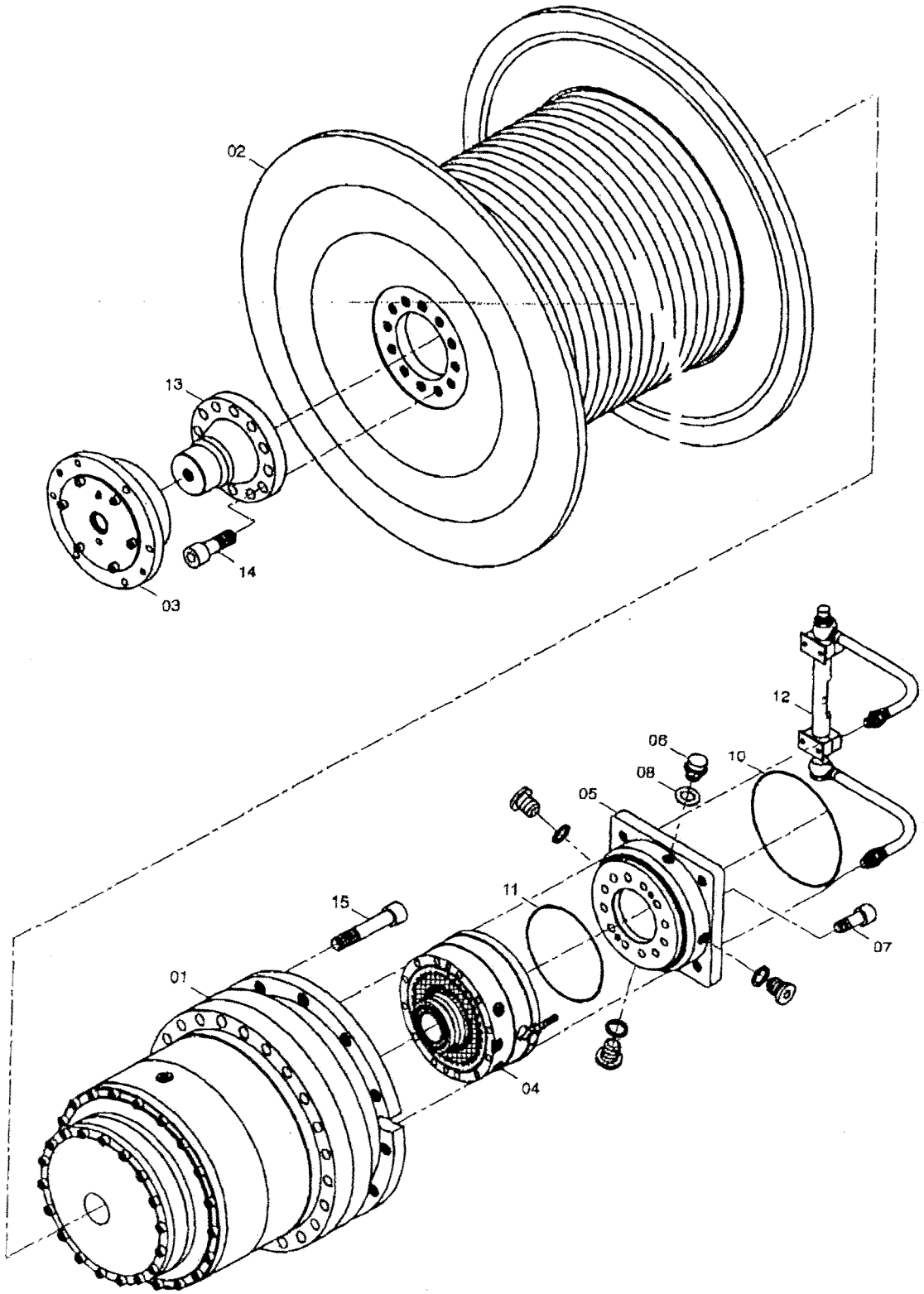

24092412_ HUBWERK KPL MIT I=54

HOIST GEAR ASSY.

TEREX DEMAG

Pos	Ident	Idx	Menge Amount	Text
01	45207812	_	1	EINBAUGETRIEBE
				BUILT-IN GEAR
02	45207612	_	1	SEILTROMMEL
				ROPE DRUM
03	42061912	A	1	LAGERBUCHSE
				BEARING BUSH
04	45250912	_	1	LAMELLENBREMSE
				DISC BRAKE
05	45251012	_	1	FLANSCH
				FLANGE
06	31339599	_	3	SCHRAUBSTOPFEN
				SCREW PLUG
07	31915699	_	12	ZYLINDERKOPFSCHRAUBE
				CYLINDER HEAD BOLT
08	33987799	_	3	DICHTRING
				SEAL RING
09	43152912	_	1	ENTLÜFTER
				BREATHER
10	45251112	_	1	O-RING
				O-RING
11	45251212	_	1	O-RING
				O-RING
12	45251312	_	1	ÖLSTANDSANZEIGE
				OIL LEVEL GAUGE
13	45086812	_	1	FLANSCH
				FLANGE
14	31929799	_	12	ZYLINDERKOPFSCHRAUBE
				CYLINDER HEAD BOLT
15	31929199	_	24	ZYLINDERKOPFSCHRAUBE
				CYLINDER HEAD BOLT

45207612_ SEILTROMMEL

ROPE DRUM

TEREX DEMAG

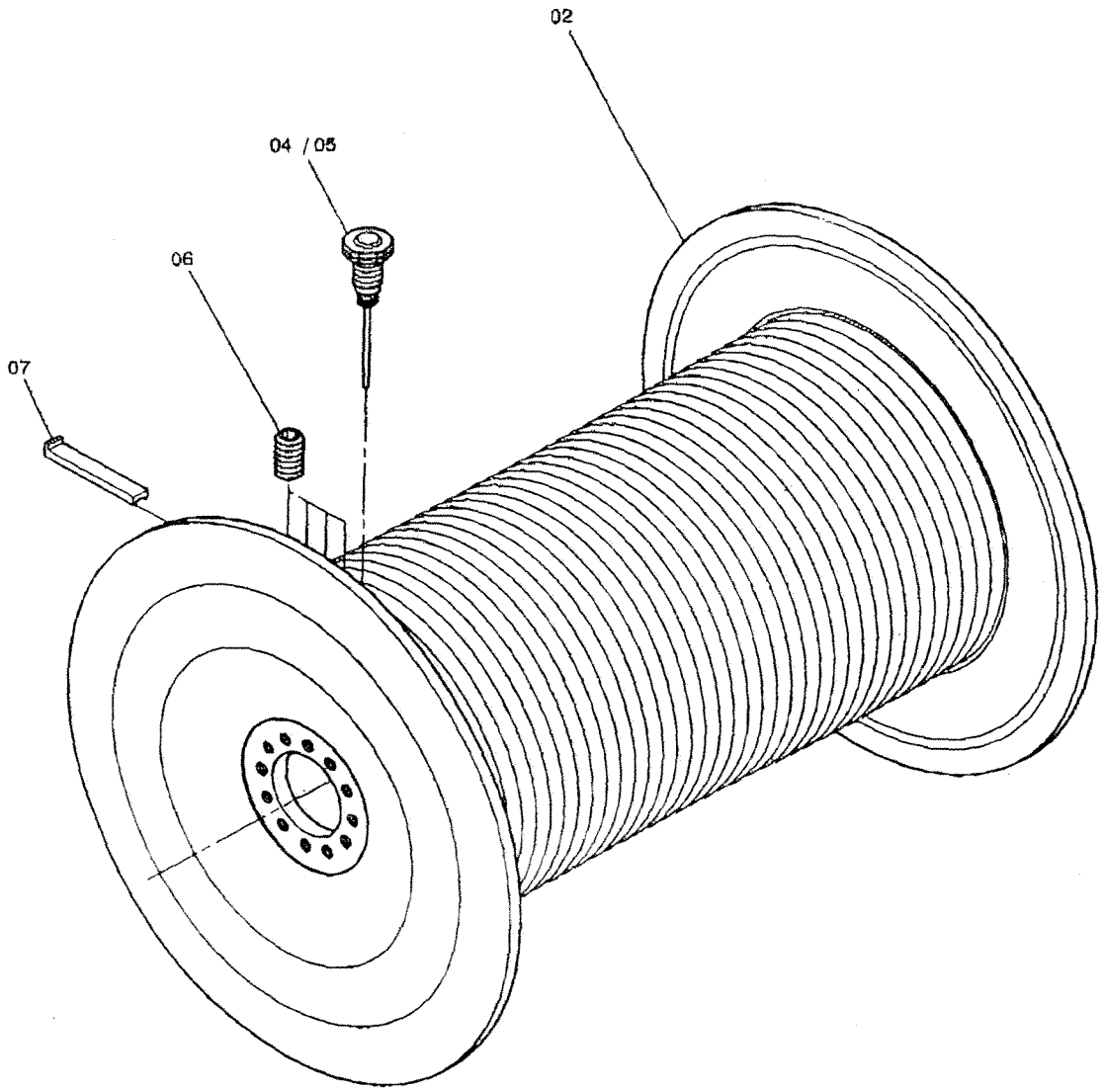

TEREX DEMAG

45207612_ SEILTROMMEL

ROPE DRUM

Pos	Ident	Idx	Menge Amount	Text
02	45251512	_	1	SEILTROMMEL
				ROPE DRUM
04	45086612	_	1	INITIATOR
				PROXIMITY SWITCH
05	45086712	_	1	KABELDOSE
				JOINT BOX
06	32516199	_	4	GWD-STIFT M16X 35
07	42069512	_	1	KLEMMSCHIENE
				CLAMPING RAIL

42061912 A LAGERBUCHSE

BEARING BUSH

TEREX DEMAG

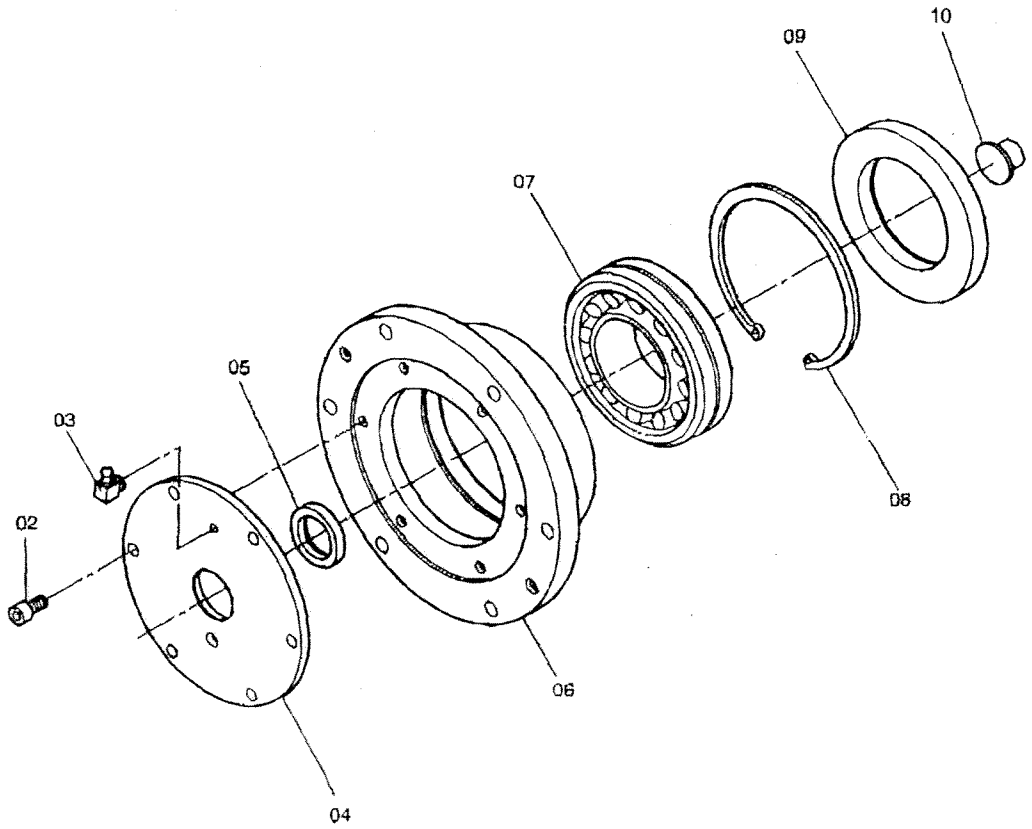

TEREX DEMAG

42061912 A LAGERBUCHSE

BEARING BUSH

Pos	Ident	Idx	Menge Amount	Text
02	31891499	_	6	ZYLINDERKOPFSCHRAUBE
				CYLINDER HEAD BOLT
03	45086912	_	1	EINSCHRAUBNIPPEL
				NIPPLE
04	45087012	_	1	DURCHGANGSDECKEL
				THROUGH LID
05	45087112	_	1	WELLENDICHTRING
				ROTARY SHAFT SEAL
06	45087212	_	1	LAGERBUCHSE
				BEARING BUSH
07	45087312	_	1	RILLLENKUGELLAGER
				ROLLER BEARING
08	34267599	_	1	SICHERUNGSRING
				CIRCLIP
09	45087412	_	1	WELLENDICHTRING
				ROTARY SHAFT SEAL
10	78064873	_	1	STECKER
				PLUG

45250912_ LAMELLENBREMSE

DISC BRAKE

TEREX DEMAG

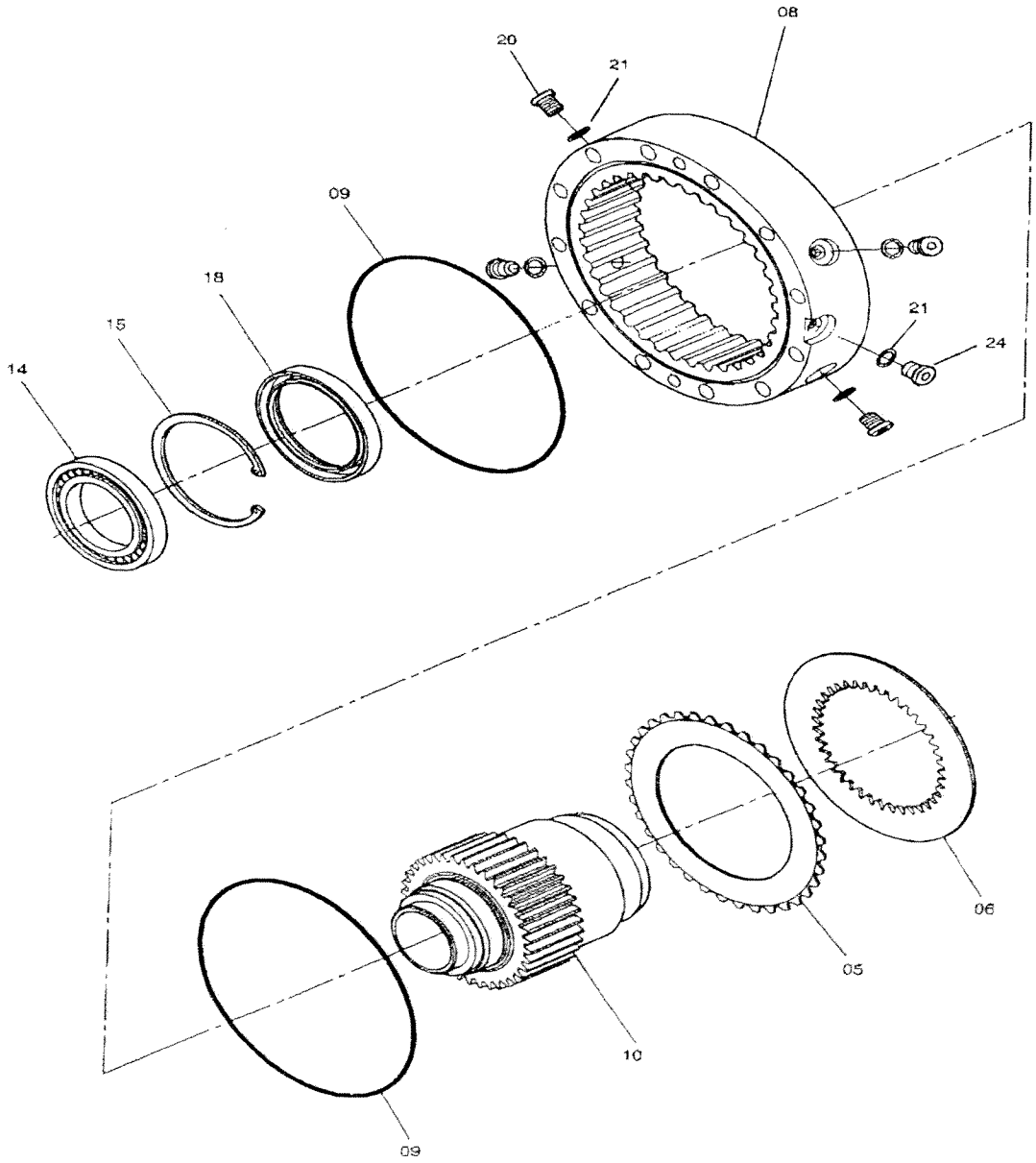

45250912_ LAMELLENBREMSE

DISC BRAKE

TEREX DEMAG

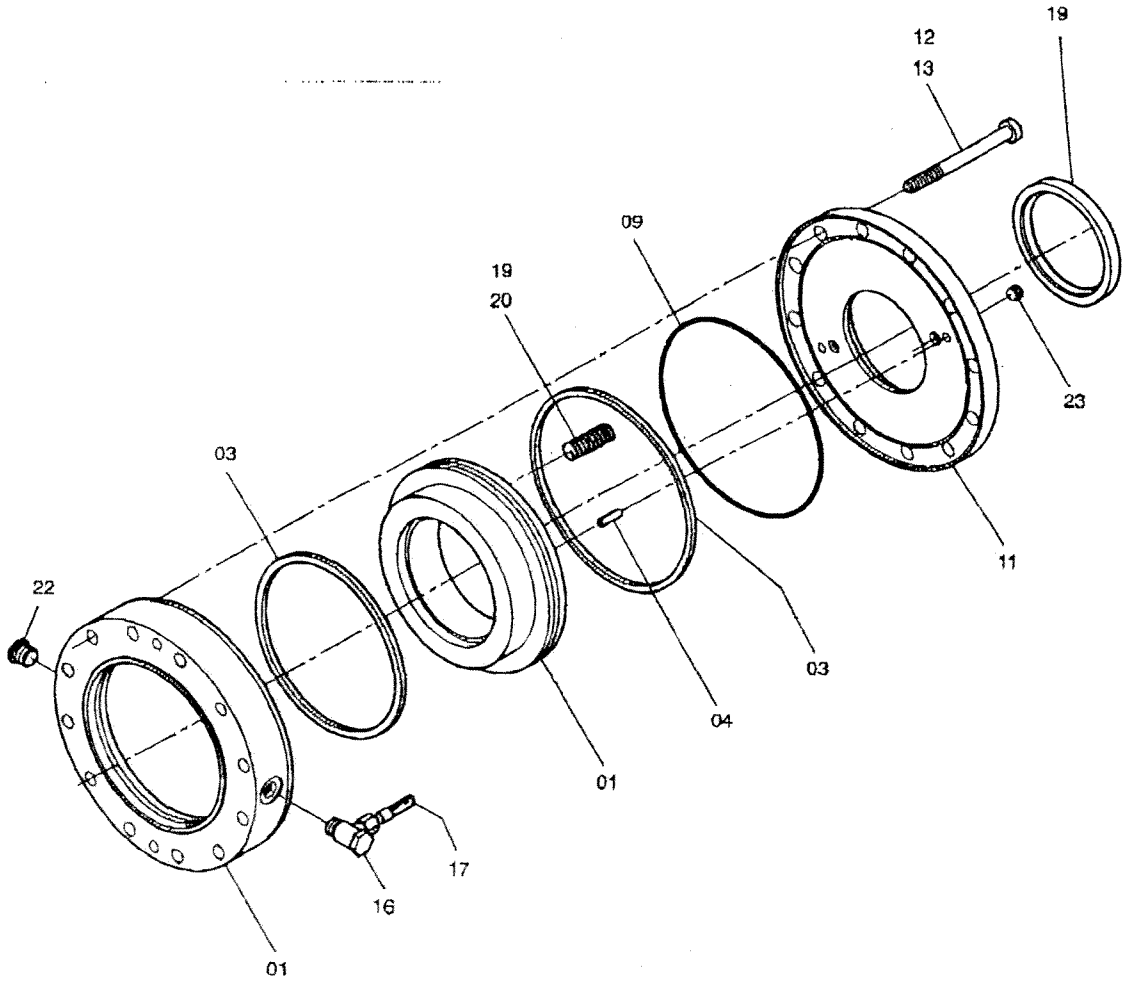

45250912_ LAMELLENBREMSE

DISC BRAKE

TEREX DEMAG

Pos	Ident	Idx	Menge Amount	Text

TEREX DEMAG

45251312_ ÖLSTANDSANZEIGE

OIL LEVEL GAUGE

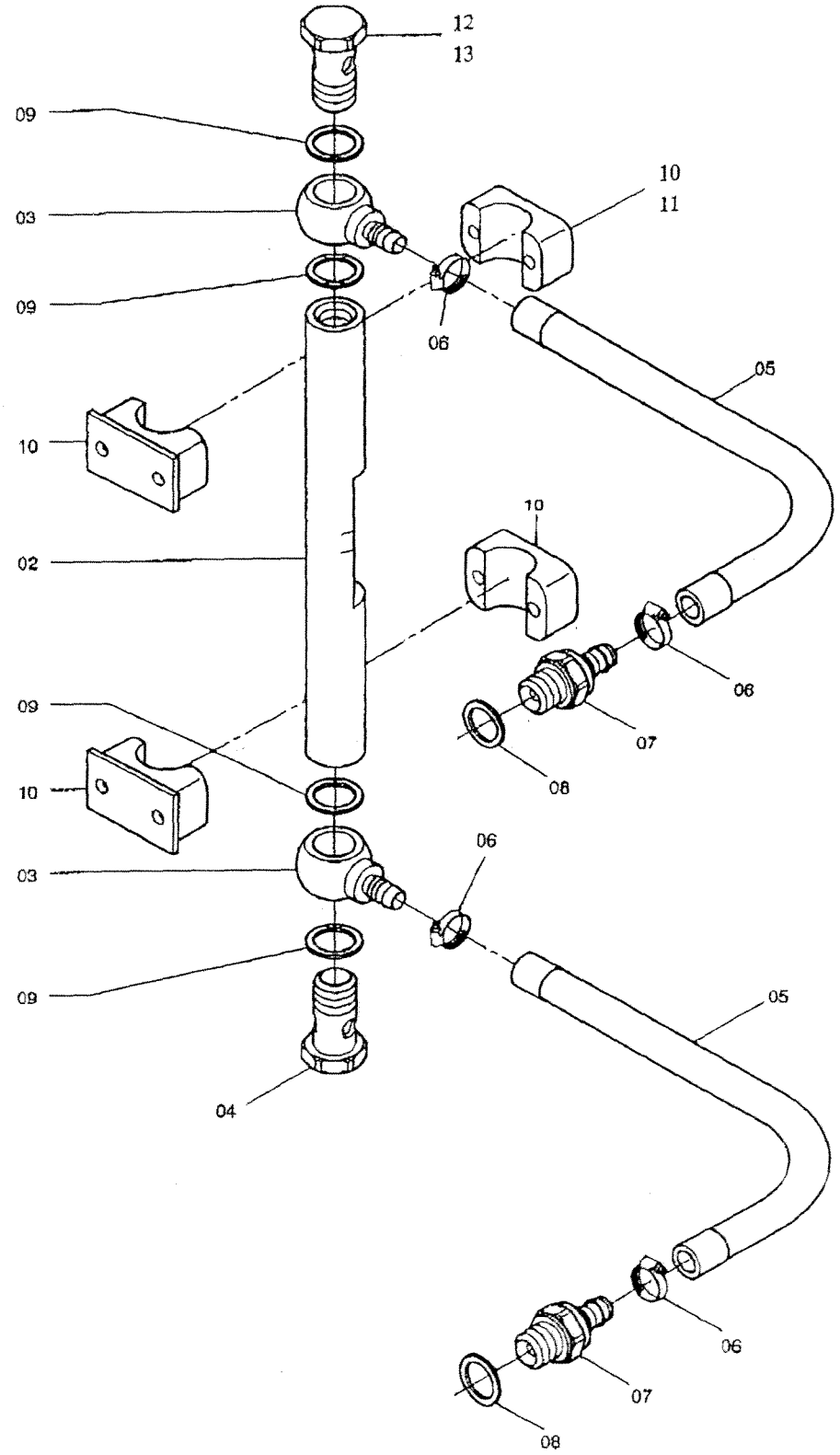

TEREX DEMAG

45251312_ ÖLSTANDSANZEIGE

OIL LEVEL GAUGE

Pos	Ident	Idx	Menge Amount	Text
02	46029112	_	1	SCHAUGLAS
				INSPECTION GLASS
03	44090212	_	2	EINSCHRAUBNIPPEL
				NIPPLE
04	45251712	_	1	HOHLSCHRAUBE
				HOLLOW-CORE SCREW
05	40505712	_	2	SCHLAUCH
				HOSE
06	44090312	_	4	HOHLSCHRAUBE
				HOLLOW-CORE SCREW
07	45089212	_	2	SCHLAUCHSTUTZEN
				HOSE CONNECTION
08	40505212	_	2	DICHTRING
				SEALING RING
09	40505912	_	4	DICHTRING
				SEALING RING
10	43153012	_	2	ROHRFLACHSCHELLE
				PIPE CLAMP
11	31913399	_	4	ZYLINDERKOPFSCHRAUBE
				CYLINDER HEAD BOLT
12	45251812	_	1	HOHLSCHRAUBE
				HOLLOW-CORE SCREW
13	45251912	_	1	FILTER
				FILTER

27572712_ VERSTELLMOTOR A6VM 140 HD2D/63W-VZB 010B

TEREX DEMAG

A6VM 140 HD2D/63W-VZB 010B

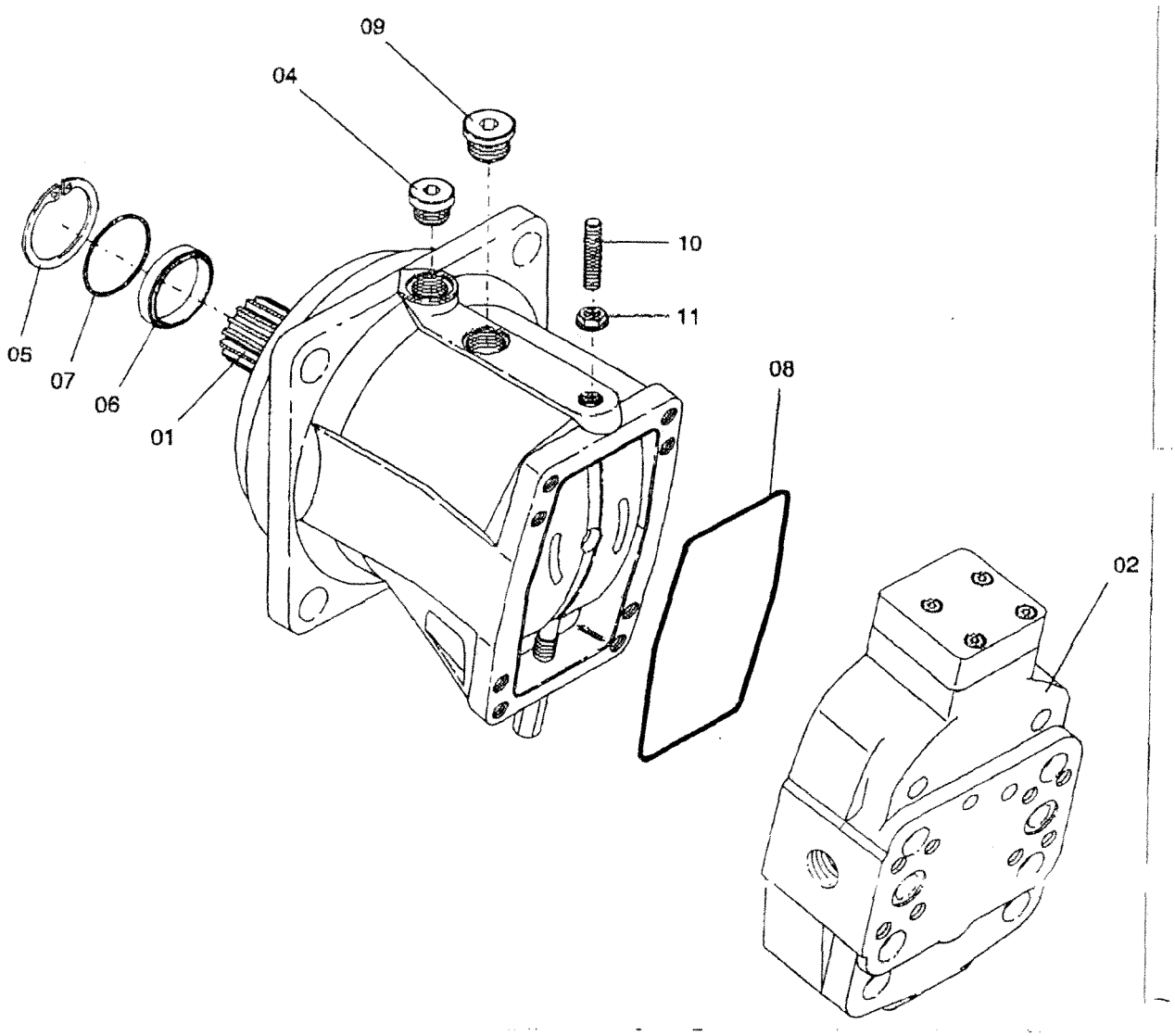

27572712_ VERSTELLMOTOR A6VM 140 HD2D/63W-VZB 010B

TEREX DEMAG

A6VM 140 HD2D/63W-VZB 010B

Pos	Ident	Idx	Menge Amount	Text
01	41543612	_	1	TRIEBWERK
				POWER UNIT
02	41603612	_	1	VERSTELLUNG, KPL.
				ADJUSTMENT ASSY.
04	08766740	_	1	VERSCHLSHR M22X1,5
05	34266599	_	1	SICHERUNGSRING
				CIRCLIP
06	75808273	_	1	WELLENDICHTRING
				SHAFT SEAL
07	75453300	_	1	SCHEIBE
				DISC
08	51491598	_	1	O-RING
				O-RING
09	31329699	_	1	VERSCHLSHR M26X1,5
				SCREW PLUG M26X1,5
10	41307812	_	1	GEWINDESTIFT
				THREADED PIN
11	96476700	_	1	BUNDMUTTER
				FLANGED NUT

TEREX DEMAG

41543612_ TRIEBWERK

POWER UNIT

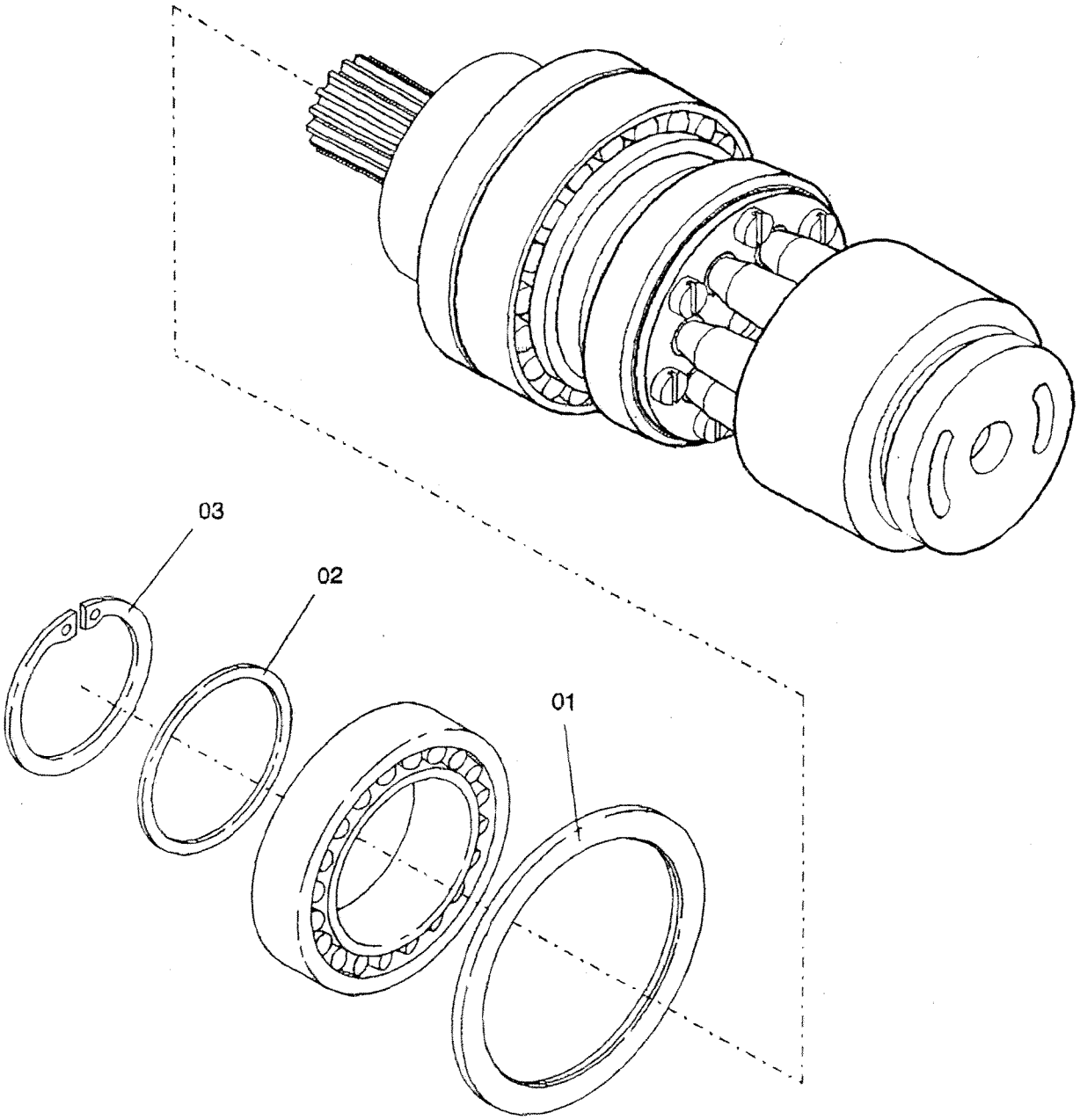

41543612_ TRIEBWERK

POWER UNIT

TEREX DEMAG

Pos	Ident	Idx	Menge Amount	Text
01	41543712	_	1	PASS SHB
				PASS WASHER
02	41543812	_	1	STÜTZ SHB
				SUPPORTING RING
03	34256099	_	1	SICHERUNGSRING
				CIRCLIP

TEREX DEMAG

41603612_ VERSTELLUNG, KPL.

ADJUSTMENT ASSY.

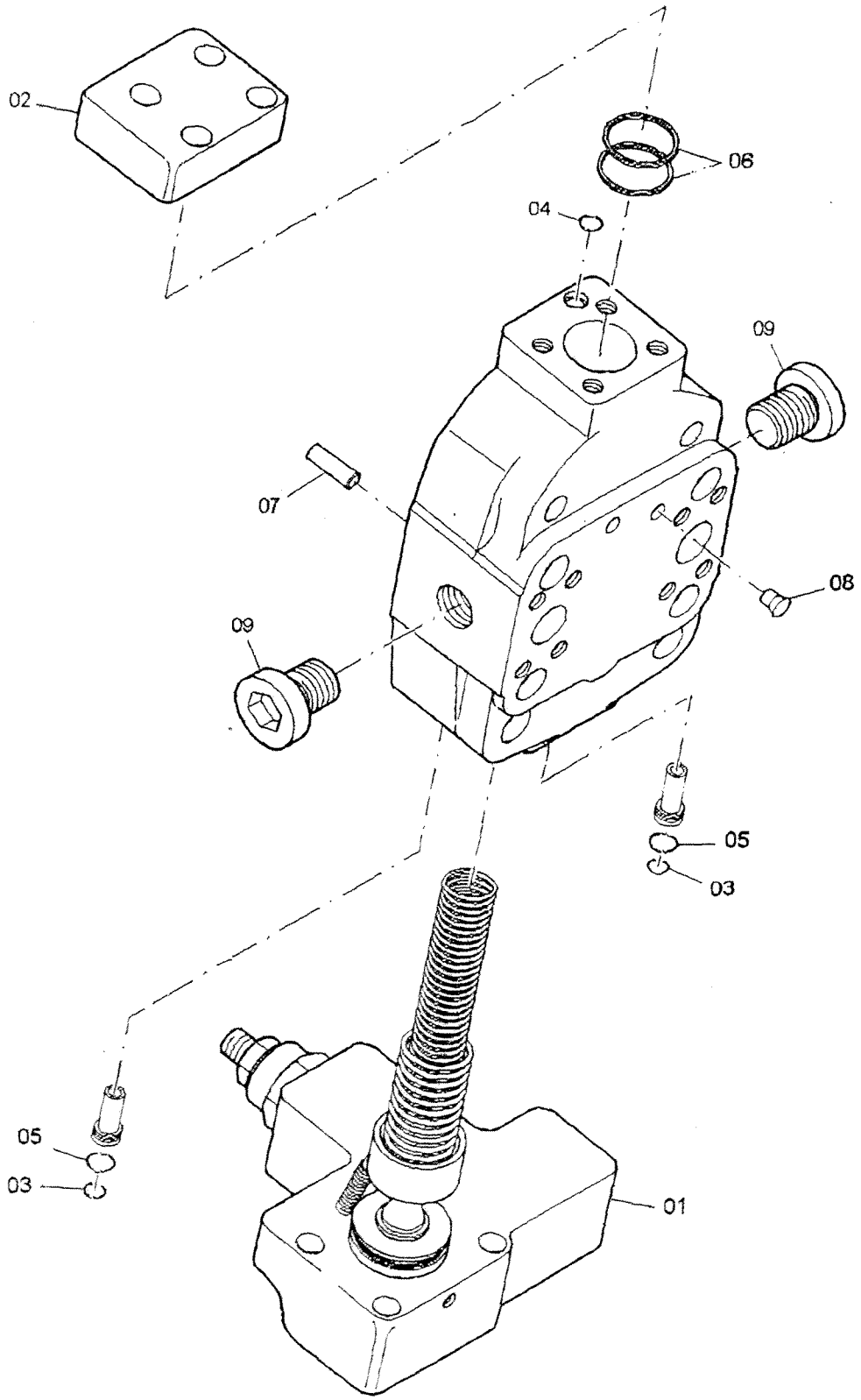

TEREX DEMAG

41603612_ VERSTELLUNG, KPL.

ADJUSTMENT ASSY.

Pos	Ident	Idx	Menge Amount	Text
01	41603712	_	1	STEUEREINHEIT
				CONTROL UNIT
02	41601412	_	1	ABDECKUNG
				COVER
03	97204000	_	2	O-RING
				O-RING
04	50484498	_	6	O-RING
				O-RING
05	50426098	_	2	O-RING
				O-RING
06	41010312	_	3	QUADRING
				QUADRING
07	34488899	_	2	ZYLINDERSTIFT
				PARALLEL PIN
08	41023712	_	1	ABREISSSTOPFEN
				BREAKING PLUG
09	21091940	_	2	SCHRAUBSTOPFEN
				SCREW PLUG

41603712_ STEUEREINHEIT

CONTROL UNIT

TEREX DEMAG

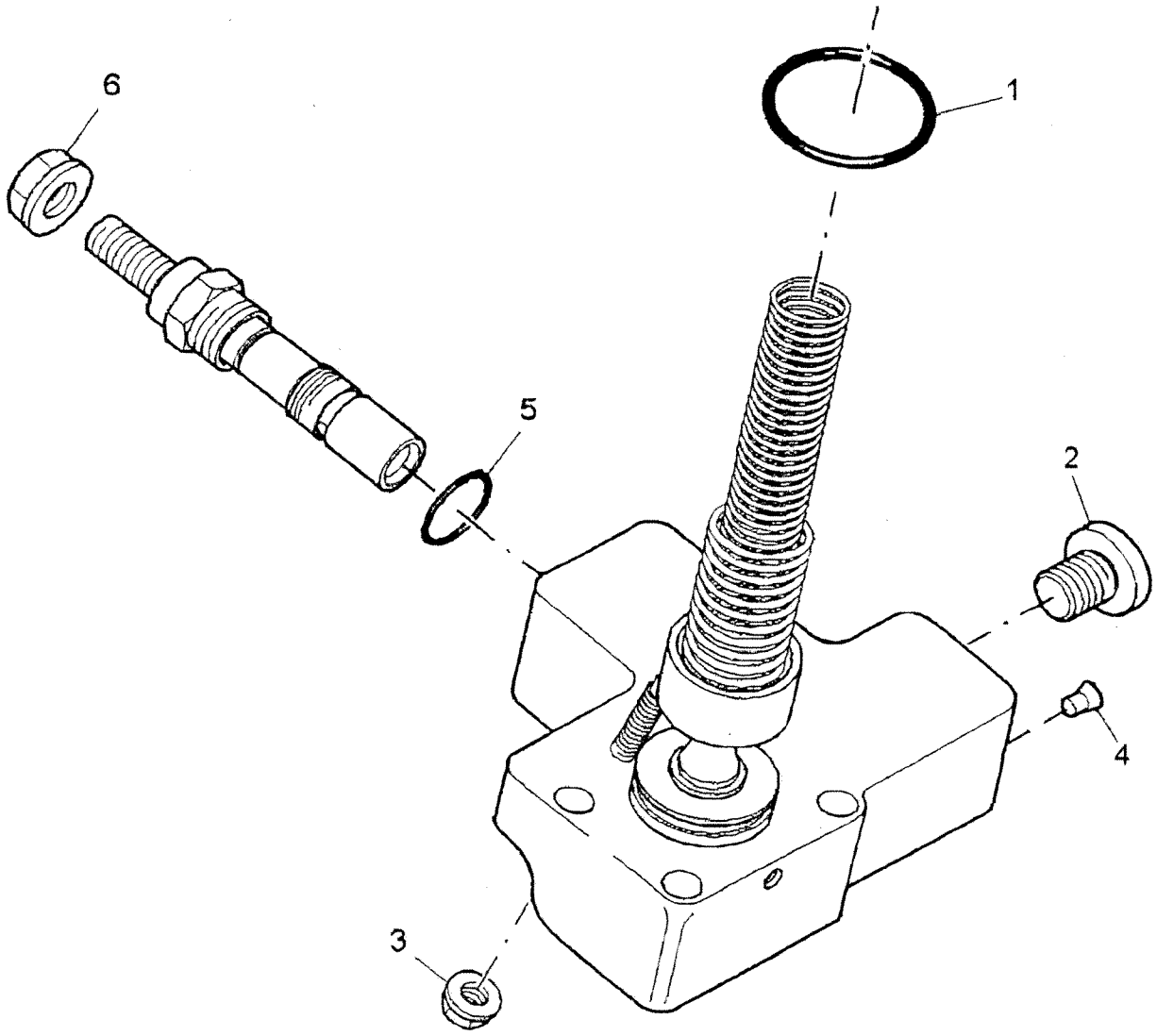

41603712_ STEUEREINHEIT

CONTROL UNIT

TEREX DEMAG

Pos	Ident	Idx	Menge Amount	Text
01	50138098	_	1	O-RING
				O-RING
02	25598540	_	1	SCHRAUBSTOPFEN
				SCREW PLUG
03	96466300	_	1	BUNDMUTTER
				FLANGED NUT
04	43103173	_	5	STECKER
				PLUG
05	50137998	_	1	O-RING
				O-RING
06	41601612	_	1	BUNDMUTTER
				FLANGED NUT

41601412_ ABDECKUNG

COVER

TEREX DEMAG

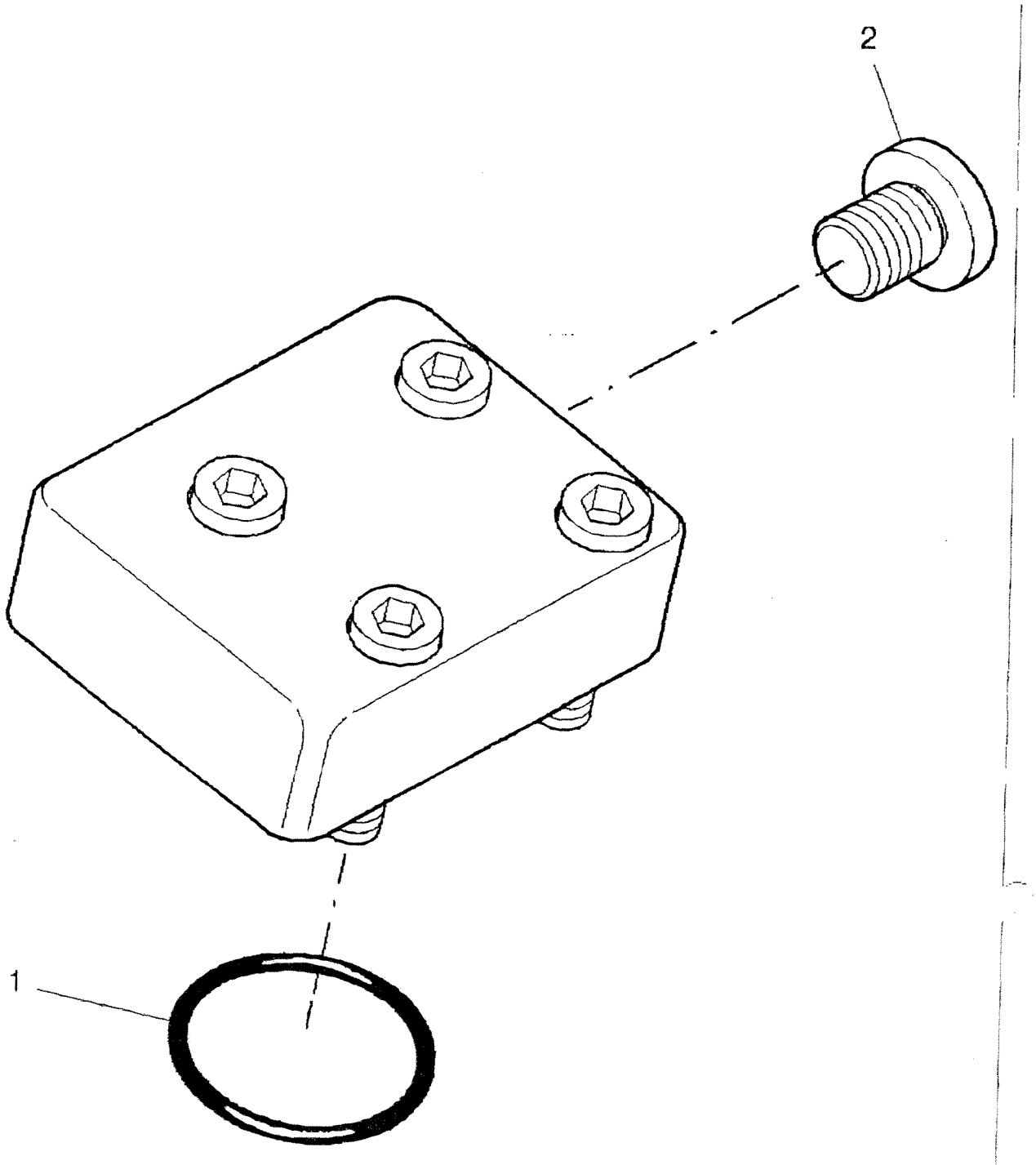

41601412_ ABDECKUNG

COVER

TEREX DEMAG

Pos	Ident	Idx	Menge Amount	Text
01	50594898	_	1	O-RING
				O-RING
02	25598540	_	1	SCHRAUBSTOPFEN
				SCREW PLUG

59105140C TRAGROLLE

TOP ROLLER

TEREX DEMAG

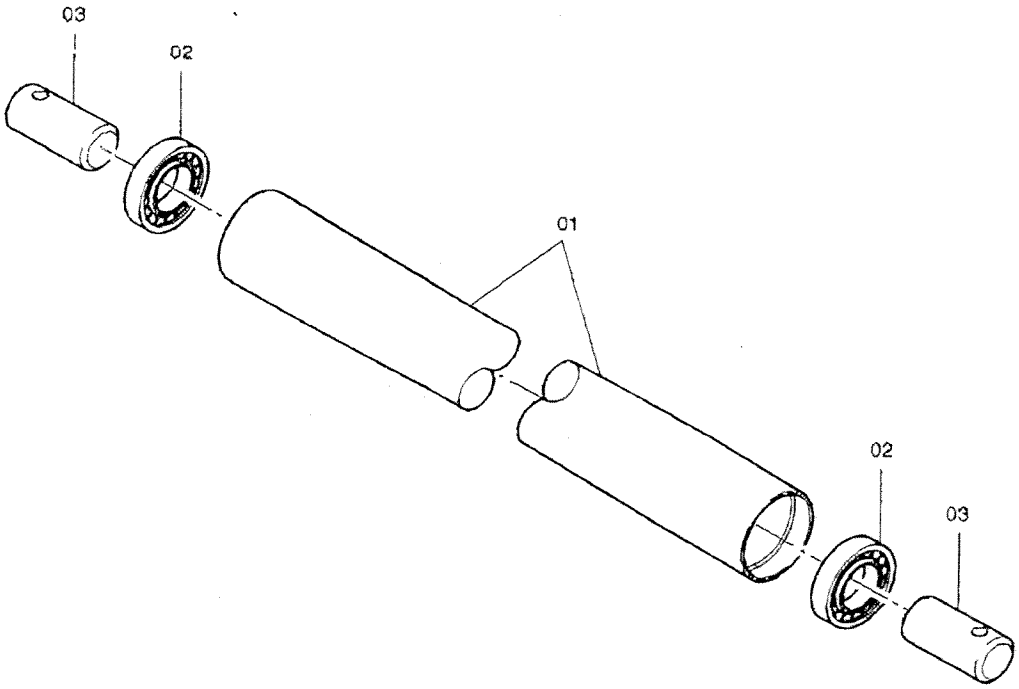

59105140 C TRAGROLLE

TOP ROLLER

TEREX DEMAG

Pos	Ident	Idx	Menge Amount	Text
01	59105240	_	1	ROHR
				PIPE
02	50477098	_	2	PENDELKUGELLAGER
				SELF-ALIGNING BEARING

58853340 A ZT HW-SEILBEFESTIGUNG FUER SEIL D21

TEREX DEMAG

ROPE FIXING HOIST GEAR

42398512_1

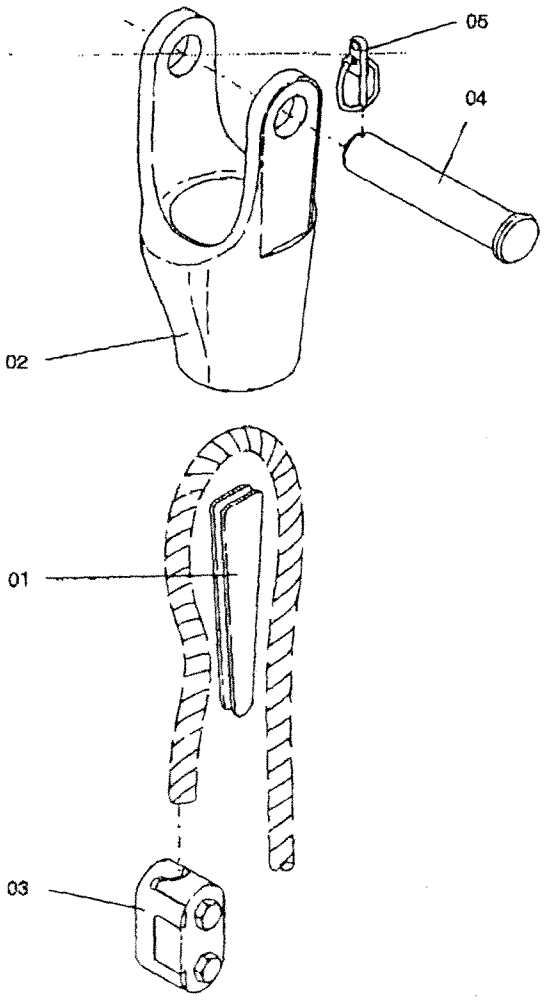

DRUMS AND WINCHES

ITEM DESCRIPTION

The Hoist Mechanism consists of a winch or drum, hydraulic motor, and load breaking system to slow or stop the movement of the load.

The hydraulic motor rotates the drum either raising or lowering the load with the installed wire rope and hook block assembly.

HOIST MOTOR COMPONENTS

The Hoist Motor provides the means of moving the drum in order to raise and lower loads.

This motor has restricted flow valves and internal planetary gears to control the lowering and hoisting. There are no single failures in this system.

Both the hydraulic and electrical systems have circuit breakers and check valves that will prevent accidental loss of load should electric or hydraulic pressure is lost.

The component illustrations in this report, while not exact, are similar in their make up and have been submitted to clarify how the hoist motor functions.

INSPECTION AND ANALYSIS
SINGLE POINT FAILURE ANALYSIS

Each hoist located on the rear upper superstructure is secured by high strength screw caps. Not a single point failure but a visual inspection of the screw caps should be done by the crane operator or some other qualified person on the lift team during the pre-lift meeting.

6/25/08

OUTRIGGER GROUP

INDEX

Pages

1..... Item Description

2 & 2A..... Specifications &Pictorial

3 &4..... Failure Analysis & Inspection

ITEM DESCRIPTION

OUTRIGGERS

The Outrigger System uses two stage horizontal beams and vertical jacks to level the crane and stabilize the crane by increasing the tipping axis for all quadrant of operation. The outrigger system also provides a means to limit the ground pressure at each tipping axis.

The outrigger system on this crane is hydraulically powered.

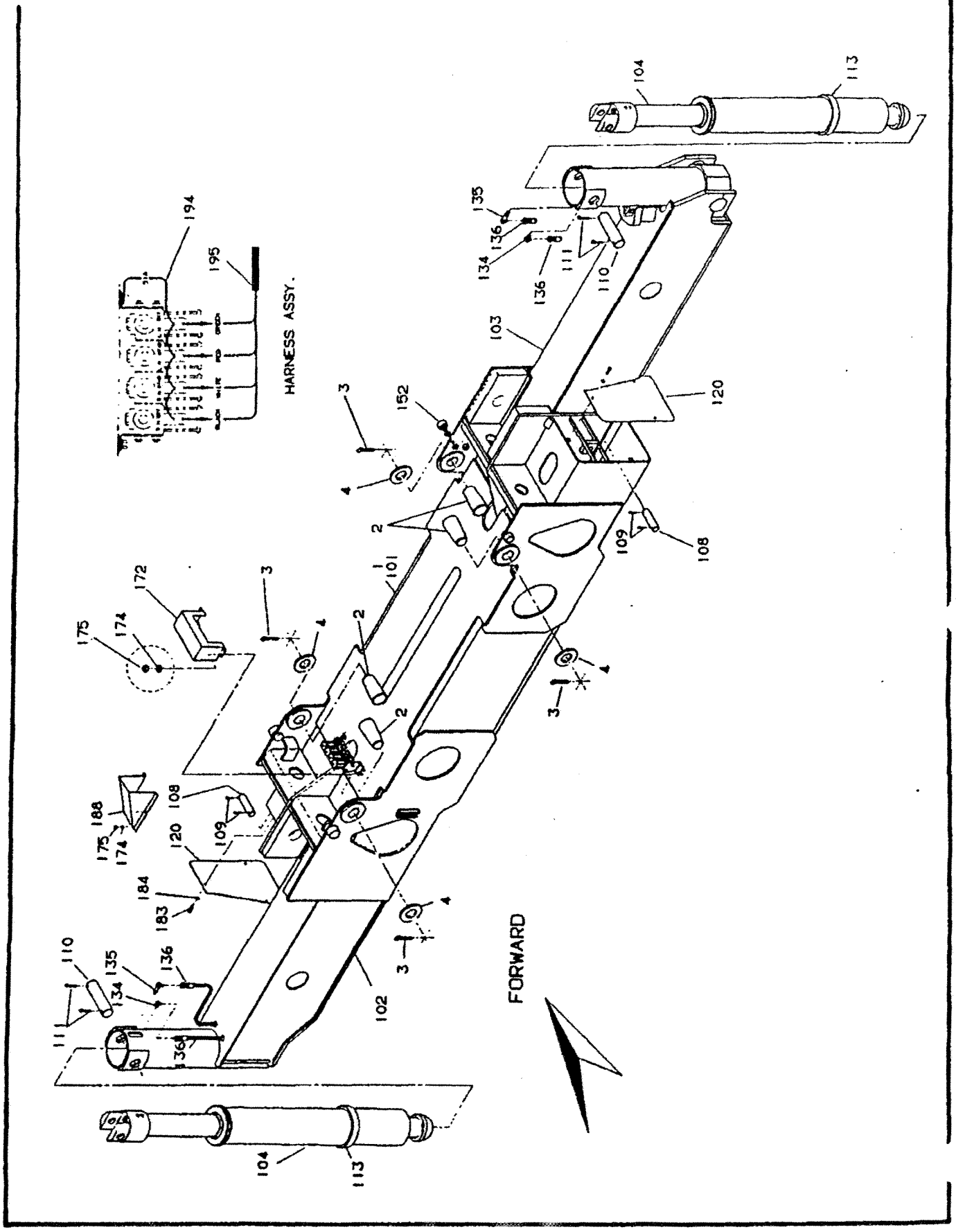

2-197-1-00229

SHEET 1 OF 5

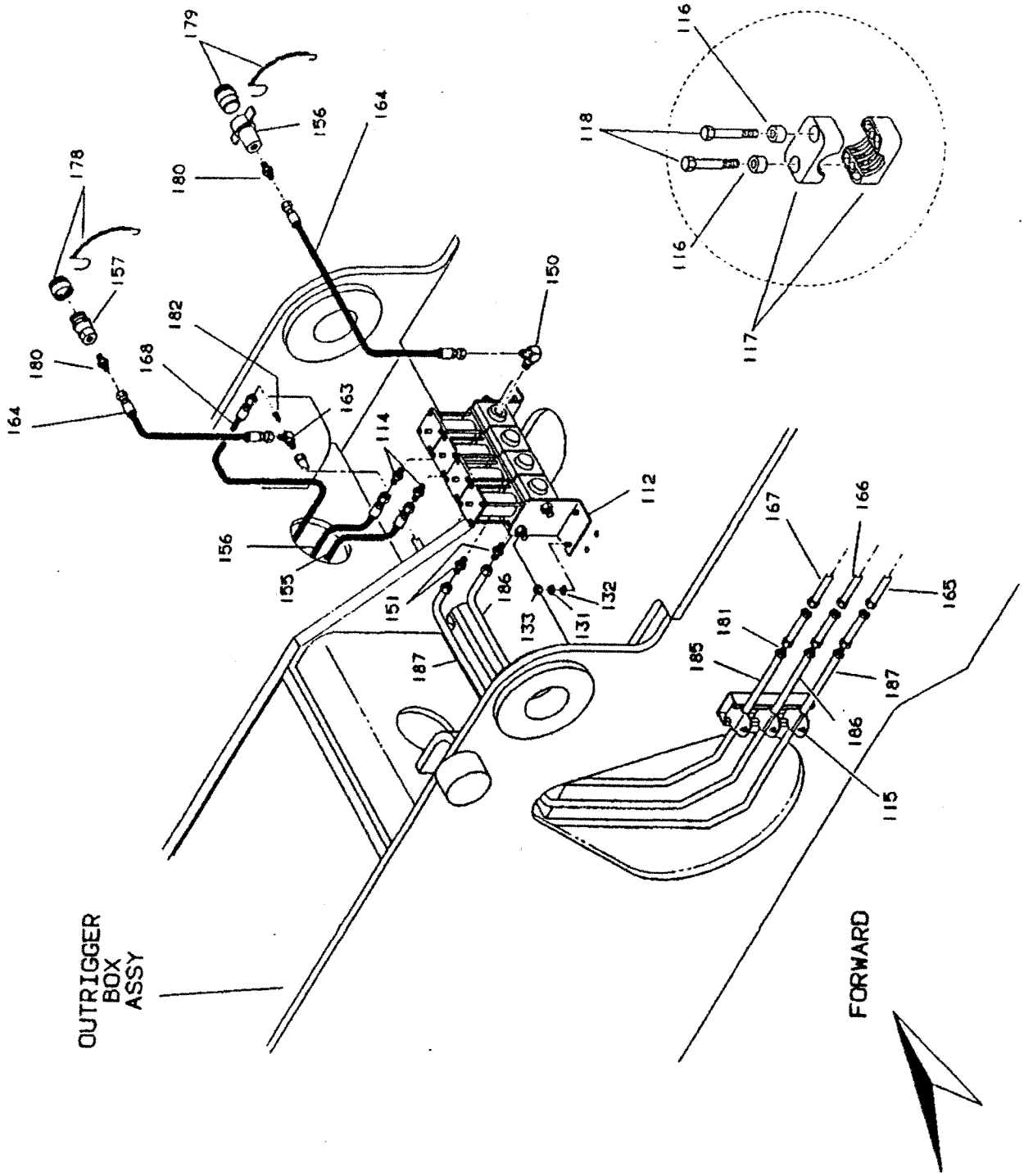
OUTRIGGER BOX ASSY
FORWARD
112
114
115
116
117
118
131
132
133
150
151
155
156
157
163
164
165
166
167
168
178
179
180
181
182
185
186
187

INSPECTION AND ANALYSIS

CYLINDER ASSEMBLY

The cylinder assembly is the vertical jacking portion of the Outrigger System. It provides the operator with the means to level and therefore stabilize the crane.

If there is a total structural failure of the cylinder assembly, loss of load would occur.

The inspection should consist of a visual examination of the vertical jacking cylinders for defects such as leak down. Outriggers employ a holding valve to prevent the jacks from leaking, however if the valve should become contaminated the valve could slowly leak down possibly causing a tipping condition and loss of load would occur. Jacks should be centered and pin on the outrigger pads. Insure that all pads are supported over 100 % of the pad area or span loading could occur causing the pads to fail at 50% capacity.

The cylinder should be inspected at the pre-lift meeting by the crane operator, lift coordinator and designated persons on N.S.I. staff.

6/25/08

INSPECTION ANALYSIS

BEAM ASSEMBLY

The beam assembly is hydraulically powered and extends out away from the crane carrier. This provides greater stability while lifting loads.

If there is a total failure in the beam assembly, loss of load will occur.

The inspection should consist of insuring that there are no structural defects to the beams such as cracked welds, bending or twisting of the beams. Close attention should be paid to the beam housing for diagonal cracks due to structural overloading.

The beam assembly should be inspected during the pre-lift meeting by the crane operator, lift coordinator and qualified persons on the N.S.I. Staff

6/25/08

ENGINE GROUP

INDEX

Pages

1..... Item Description

2 .....Specifications

3.....Pictorial

ITEM DESCRIPTION

ENGINE

Hydraulic Pressure and Electrical Power are provided through hydraulic pumps and electrical generators which are driven by the cranes diesel engine.

Should total engine failure occur all action will be stopped and the load will remain stationary until engine power is restored?

No loss of load will occur should engine power be lost.

MANUFACTURER:

DaimlerChrysler OM 904 LA

TYPE:

Kw, 1800 Nm

Diesel

Internal Combustion

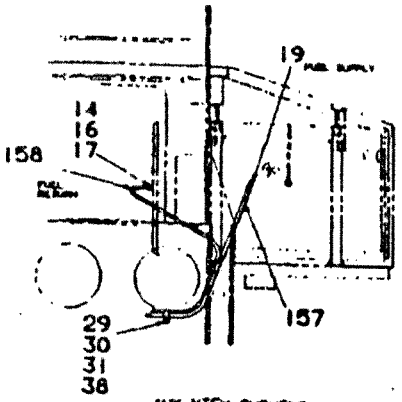

AUX VIEW SHOWING
FUEL TANK HOOK-UP

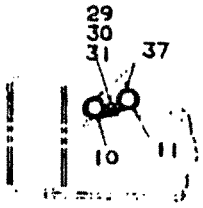

VIEW A-A

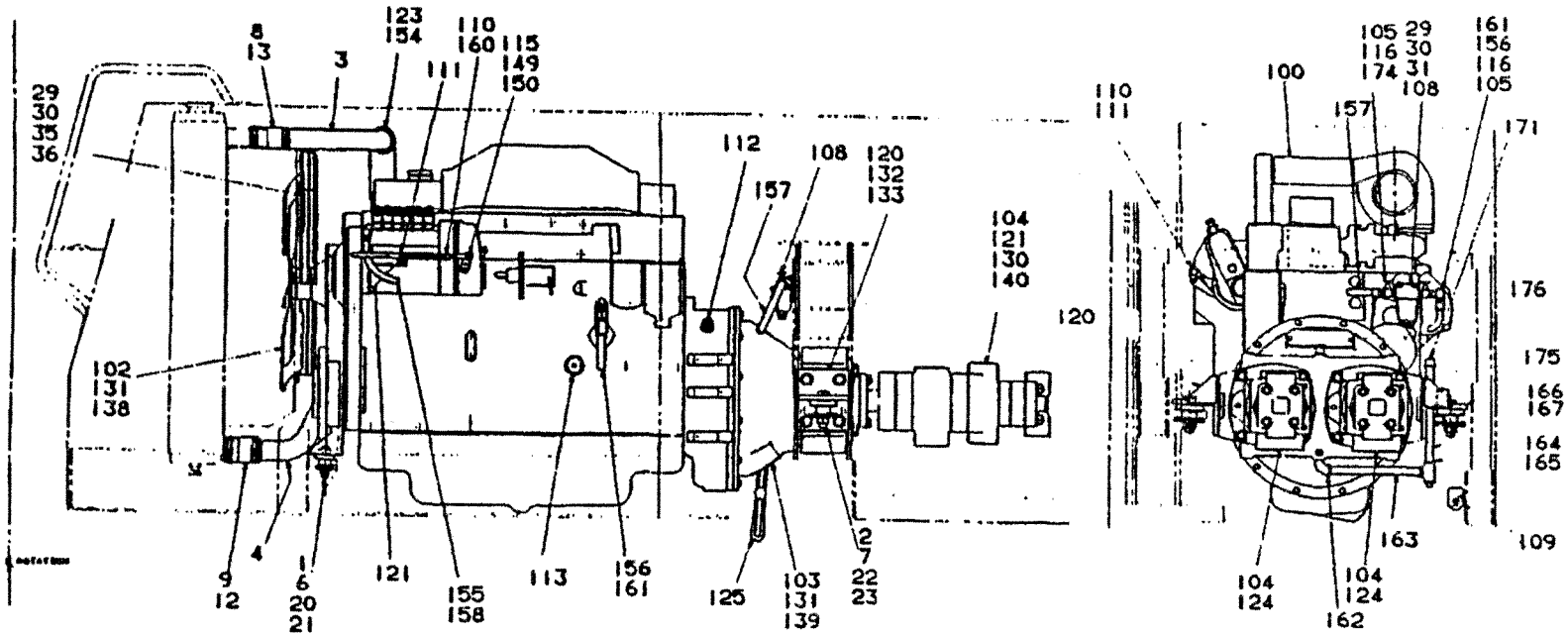

Sheet 2 of 2

2-197-8-00449

GROVE

ELECTRICAL SYSTEM

INDEX

Pages

1..... Item Description

2 .....Specifications

SYSTEM ANALYSIS

ELECTRICAL SYSTEM

The Electrical System of the crane works in conjunction with the hydraulic system. Each action requires both hydraulic and electrical activation. No single item will cause loss of load.

If a particular electrical component should fail, that particular function would be repaired.