MAGNETIC PARTICLE TEST RECORD
(YOKE ONLY)

WORK ORDER NO.:	N/A	DATE PERFORMED:	4/8/2009
PROCEDURE REF.:	NMP-101	EQUIPMENT S/N:	W-107
TEST ITEM ID:	LIEBIERR SER# 070-502	CAL DUE DATE:	10/2009
INSPECTION MEDIA: BATCH/LOT NO.	Red 7802-262-00 lot # MPW-210 series		

1. SURFACE PREPARATION:(CHECK WHEN COMPLETE)

	COMPLETED	NOT REQUIRED
PAINT REMOVAL (CHIPPING, GRINDING, WIRE BRUSH, SOLVENT)		X
REMOVAL OF SURFACE IRREGULARITIES OR RUST (GRINDING, WIRE BRUSHING)		X
SURFACE CLEANING (SOLVENT, DETERGENT, CLEAN RAGS)		X

2. MAGNETIZATION METHOD AND YOKE CALIBRATION (INITIAL WHEN COMPLETE):

ALTERNATING CURRENT (CALIBRATE YOKE W/ 10LB TEST WEIGHT)	
DIRECT CURRENT (CALIBRATE YOKE W/ 40LB TEST WEIGHT)	X

3. INSPECTION SEQUENCE: (NOTE: EACH SEPARATE AREA EXAMINATION MUST OVERLAP PRECEDING AREA BY MINIMUM OF 2 INCH)

		INITIAL WHEN COMPLETE
A	POSITION YOKE	HH
B	APPLY MAGNETIZING CURRENT	HH
C	APPLY DRY MAGNETIC PARTICLES, AND REMOVE EXCESS WHILE CURRENT REMAINS ON	HH
D	SWITCH OFF CURRENT AND REMOVE YOKE	HH
E	EVALUATE INDICATIONS	HH
F	REPEAT STEPS "A" THRU "E" WITH YOKE POSITIONED 90° FROM THE ORIGINAL POSITION	HH

FORM #MT101-Rev04

MAGNETIC PARTICLE TEST RECORD
(YOKE ONLY)

WORK ORDER NUMBER:

4. **ACCEPTANCE CRITERIA: (CHECK APPROPRIATE BOX)**

PROVIDED BY REQUESTOR (ATTACH TO THIS REPORT)	
NDT HANDBOOK ACCEPTANCE CRITERIA NUMBER:	**AC-10**

5. **EXAMINATION RESULTS (DESCRIBE ALL UNACCEPTABLE INDICATIONS):**

X	ACCEPT			REJECT

6. **DEMAGNETIZATION PERFORMED:**

YES			**NO**	**X**		**N/A**	

TYPE	

Henry L Henry #WL1 LEVEL II

SIGNATURE DATE 4/8/09

LEVEL

SIGNATURE DATE

FORM #MT101-Rev04

NG & RIG
WIDE
AD

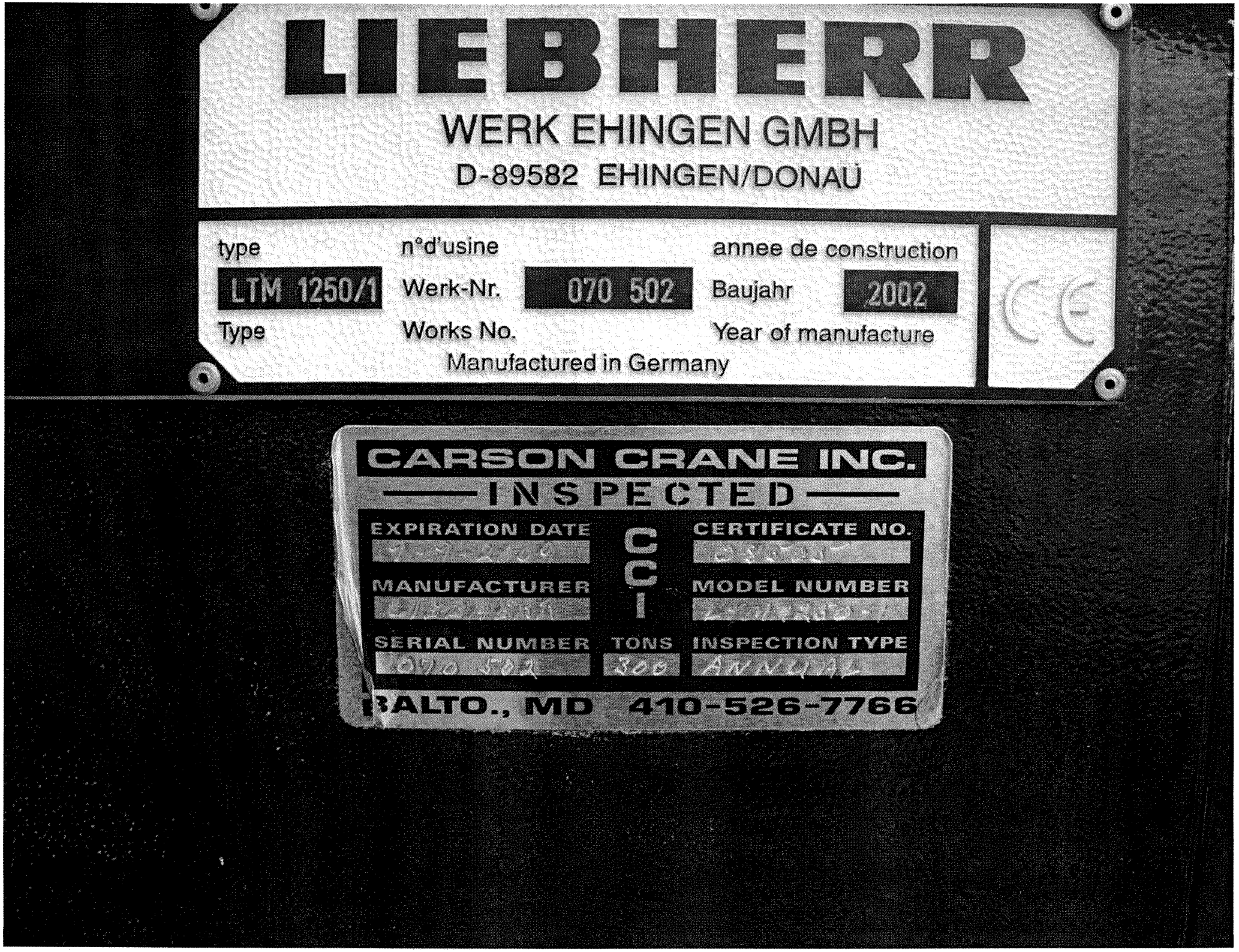
LIEBHERR
WERK EHINGEN GMBH
D-89582 EHINGEN/DONAU
type
LTM 1250/1
Type
n°d'usine
Werk-Nr.
070 502
Works No.
annee de construction
Baujahr
2002
Year of manufacture
Manufactured in Germany
CARSON CRANE INC.
INSPECTED
EXPIRATION DATE
CERTIFICATE NO.
MANUFACTURER
MODEL NUMBER
SERIAL NUMBER
070 502
TONS
300
INSPECTION TYPE
ANNUAL
BALTO., MD 410-526-7766

INTRODUCTION

This analysis is based on the subject equipment being properly assembled and in the correct configuration to perform the work, set up according to manufacturer's specification including level state, proper cribbing, lubrication, fluids levels, and adjustments.

Because the specification for this analysis did not describe the crane configuration, the weight, radius, or height of the lift, several options will be analyzed.

Some illustrations will not be an exact match; however, they will contain the same components as described by the manufacturer.

FAILURE MODES EFFECT ANALYSIS

TABLE OF CONTENT

HOOK BLOCK GROUP 3
WIRE ROPE GROUP 17
DRUMS & WINCH (HOIST) GROUP 29
BOOM NOSE GROUP 37
BOOM LIFT GROUP 45
OUTRIGGER GROUP 53
ENGINE GROUP 60
ELECTRICAL SYSTEM GROUP 64

HOOK BLOCK GROUP

TABLE OF CONTENT

SYSTEM DESCRIPTION 4
INSPECTION AND ANALYSIS - BEARINGS, SPACERS AND SHEAVES 5
INSPECTION AND ANALYSIS - TRUNNION 6
INSPECTION AND ANALYSIS – WEDGES, MECHANICAL SOCKETS & DEAD END. 7
INSPECTION AND ANALYSIS - THROUGH SHAFT 8
INSPECTION AND ANALYSIS - SHANK NUT 9
INSPECTION AND ANALYSIS - HOOK 10
ILLUSTRATION HOOK 1.0 11
ILLUSTRATION HOOK 2.0 12
ILLUSTRATION HOOK 3.0 13
ILLUSTRATION HOOK 4.0 14
ILLUSTRATION HOOK 6.0 16

SYSTEM DESCRIPTION

HOOK BLOCK

Hook blocks are used to increase hoisting efficiency on crane and hoisting systems by means of increasing the number of running wire ropes through encased sheaves. Attached to the encasement or block are single or multiple barb hooks. The hook provides a means to attach loads usually using suspension gear such as slings.

This crane comes with a variety of hook options that can be used based on the weight of the loads to be hoisted and the hoisting speeds desired. The description given for the analysis and inspection will apply to all hook block options. The difference being the number of sheave and possibly a double hook verses a single hook.

The hook block will have a wedge socket connect located either on top or to one side of the block for the purpose of securing or dead ending the wire on the block when odd numbers of parts are required.

INSPECTION AND ANALYSIS - BEARINGS, SPACERS AND SHEAVES

(SINGLE POINT FAILURE)

Hoist Block Sheaves operate within the block and boom point with the assistance of spacers. Spacers separate the sheaves in order to provide a necessary even load on the boom head. The hook block maintains a like distance to allow for eccentric reeving to prevent twisting in the boom head. Twisting could cause the boom to fail with loss of load.

Bearings allow sheaves to rotate with a minimum of friction or lateral movement or wobble. Defective sheave bearings may cause the sheaves to freeze causing eventual failure of the wire rope causing loss of load.

A visual inspection should be conducted by the crane operator, lift coordinator, or designated N.S.I. staff during the pre-lift meeting on the job site.

The inspection should consist of insuring that all sheaves are operating properly and no damage or excessive wear is present. Sheaves shall support the wire rope from 135 to 150 degrees of the wire rope circumference. Sheave grooves shall be smooth, flanges shall not be broken and sheave guards shall be in place and undamaged.

Tony McLean
4/8/09

INSPECTION AND ANALYSIS - TRUNNION

(SINGLE POINT FAILURE)

Trunnion failure would cause the upper portion of the hook block (containing the sheaves and through shaft) to separate from the lower portion of the hook block.

Complete failure of the trunnion will result in total loss of load.

The trunnion should undergo a visual inspection by the crane operator, lift coordinator, or other designated personnel at the lift site. Wear areas are difficult to visually inspect. Look for signs of looseness, freezing, sticking, or wear. It is recommended to have the block disassembled for a NDT prior to the lift if it has not been done within the past 12 months. This item should be deemed passive before the lift is made.

4-8-09

INSPECTION AND ANALYSIS – WEDGES, MECHANICAL SOCKETS & DEAD END

(SINGLE POINT FAILURE)

The wedge connection point on the hook block is used to attach the wire rope when odd numbers of parts are needed. The connection point enables the wedge socket or mechanical wedged socket (pressed end) to be pinned to the block. A similar attachment will be on the boom point. Should the attachment point fail, the load would free fall as the wire rope renders or unreeves.

The wedge connection point should be inspected by the crane operator, lift coordinator and designated persons during the pre lift meeting for any distortions, cracks, more than 10% wear at any location, evidence of heat damage such as welding or burning, or unapproved modification.

Failure due to incorrect installation of the wedge or the pressed end sockets would allow the load to free fall as the wire rope unreeves.

The operator, lift coordinator and designated N.S.I. staff should inspect the socket during the pre-lift meeting for any signs of slippage, worn or damaged pins, cotter keys, more than 10% wear, proper installation of the wire rope, distorted pressed fittings or sockets, proper length preparation of dead end on wedge sockets, on pressed end sockets check socket connector on rope for any signs of slippage; if applicable check the mushroom grip, flap, and sleeve for proper operation or damage.

These items must be deemed passive before proceeding with the lift. Inspection does not require disassembly.

4-8-09

INSPECTION AND ANALYSIS - THROUGH SHAFT

(SINGLE POINT FAILURE)

Hook block sheaves are held in place by a shaft that passes through the sheaves and attaches to the inner plates of the block housing. If the through shaft breaks the sheaves and the wire rope may fail or detach resulting in loss of load.

In the absence of a recent NDT report or certification the hook block should be inspected visually by the operator, mechanic, lift coordinator or designated N.S.I. staff. The hook block inspection should consist of looking for excessive sheave wobble, binding or bearing failure.

Henry S Henry # WL1 4/8/09

INSPECTION AND ANALYSIS - SHANK NUT

(SINGLE POINT FAILURE)

The shank nut holds the hook in the block assembly. Should the shank nut completely fail, the hook would separate from the hook block, resulting in loss of load.

A visual inspection of the shank nut shall be performed during the pre-lift meeting by the operator, mechanic, lift coordinator or designated N.S.I. staff. Inspection should insure there is no distortion or cracks on the nut, and proper tightness to still allow rotation of the hook. This item shall be deemed passive before the lift is made.

4-08-09

INSPECTION AND ANALYSIS - HOOK

(SINGLE POINT FAILURE)

The hook is the load bearing point of the hook block. Structural failure of the hook will result in loss of load.

A visual inspection of the hook shall be performed during the pre-lift meeting by the operator, lift coordinator or designated N.S.I. staff. The inspection can be performed on site and does not require disassembly.

The hook inspection should consist of looking for hairline cracks, spreading of the hook by more than 15% of the original throat opening, loss of 10% or more of the original hook material, twisting, and evidence of heat damage such as welding. A recent NDT certification of the hook, nut, and block should be presented to the N.S.I. staff.

4-08-09

ILLUSTRATION HOOK 1.0

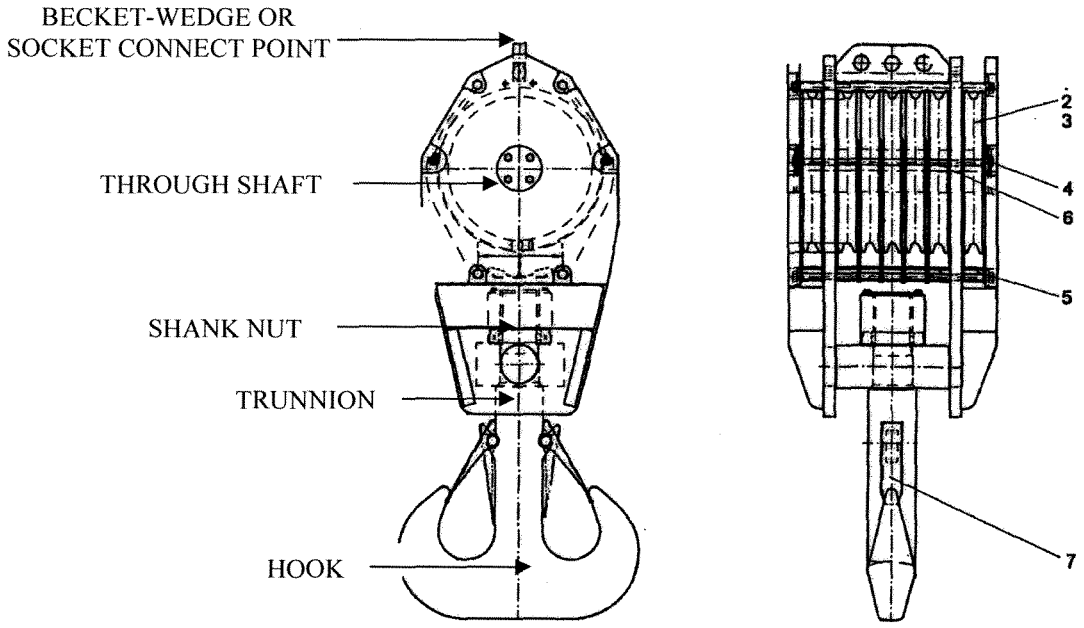

Pos.	Artikel Item Article	Menge Quantity Quantite	Bezeichnung Description Description		Serie
1	92 52 034 08	7	SEILROLLE KPL.	ROPE PULLEY COMPL.	
			-> 3 104 004 92 52 034 08		
2	77 39 536 08	7	SEILROLLE RD572X63 PA6G SPF-982205114-8	ROPE PULLEY	
3	74 65 066 08	7	WAELZLAGER 150X210X80	ROLLER BEARING	
4	43 32 013 08	4	KLAPPSTECKER 5X32	LINCH PIN	
5	57 17 160 08	1	SEILSCHUTZ KPL.	ROPE GUARD	
6	57 17 164 08	2	SEILSCHUTZ KPL.	ROPE GUARD	
7	57 17 165 08	2	SICHERUNGSFALLE	SAFETY LATCH	
8	57 19 050 08	2	SEITENBLECH	PLATE	
9	57 19 051 08	1	ACHSE	AXLE	

24.5.2002 021293 LIEBHERR	LTM 1250/1 Werknr. 070502 HAKENFLASCHE HOOK BLOCK	552 4 028 91 44 016 08

ILLUSTRATION HOOK 2.0

Rotation Resistant Ropes

BRIDON AMERICAN

SEIZING AND CUTTING

Because Rotation Resistant Ropes can be difficult to properly identify by sight, it is recommended that all Rotation Resistant Ropes be tightly seized with wire, strand or tape; or welded before cutting. It is important that all Rotation Resistant Ropes be prevented from unlaying when cut regardless of construction. General guidelines for seizing and welding are shown in the detail below. Endurance 35LS and Dyform-34LR should have welded ends and not seized ends.

PREFORMED/NON-PREFORMED

Rotation Resistant Ropes are special ropes and are produced with special manufacturing techniques to meet all of the required operating parameters of the ropes. To prevent confusion as to which are preformed, partially preformed and non-preformed, Bridon American attaches a warning tag on all Rotation Resistant Ropes to indicate that they should always be properly seized when cut.

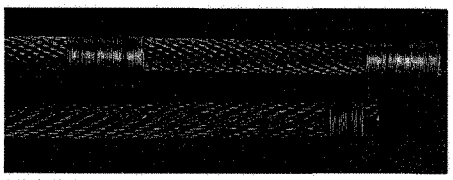

NOTE: Two seizings are recommended for non-preformed rope and one seizing for preformed rope. Each seizing should be at least one rope diameter in length.

WELDED ENDS

A welded rope end can facilitate the installation of a Rotation Resistant Rope in a wedge socket. A welded rope end combined with a tail of less than 20 rope diameters can cause rope distortion. If the proper tail length is used, a welded end is acceptable.

Capped welded end.

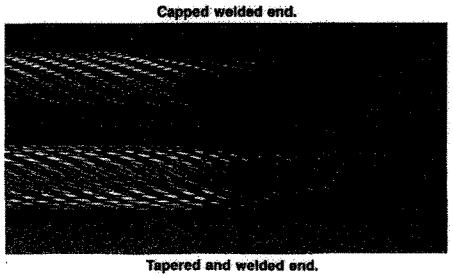

Tapered and welded end.

HANDLING/INSTALLATION

Rotation Resistant Ropes must have properly seized, or welded ends. They must be installed without inducing twist or turn. They must not be kinked, and they must have the proper tail length at the wedge socket.

WEDGE SOCKETS

All Rotation Resistant Ropes can be used with standard wedge sockets. Certain precautions must be taken. All Rotation Resistant Ropes should be tightly seized with wire, strand or tape; or welded to prevent loss of rope lay at the dead end. Loss of rope lay will change the operating characteristics of the ropes and can cause high strands and rope distortion.
The dead end should be a minimum length of 20 rope diameters for all Rotation Resistant Ropes. A wire rope clip may be attached to the dead end.

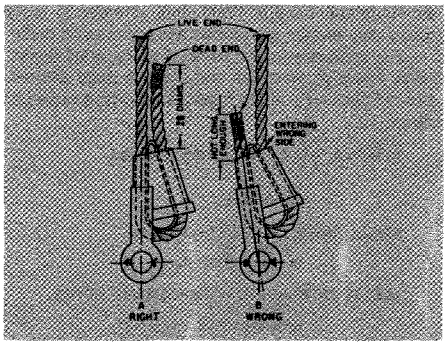

SWIVELS

BAC's recommendation is that 19 x 7, 18 x 7 FC, 8 x 19 IWRC, Dyform-18 and Dyform-18 HSLR should not be dead ended into a swivel. The multiple strand Rotation Resistant Ropes such as Dyform-34LR and Endurance 35LS may be used with a swivel in any application.
The reason for this recommendation is that the standard Rotation Resistant Ropes and the Special Rotation Resistant Ropes will rotate under load. Excessive rotation will cause imbalance and a reduction in strength. Under a shock load or overload condition, the strength of these ropes can be reduced as much as 50%.

ILLUSTRATION HOOK 3.0

END FITTINGS FOR WIRE ROPE AND STRUCTURAL STRAND

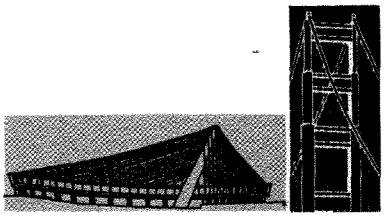

Open Strand and Wire Rope Sockets

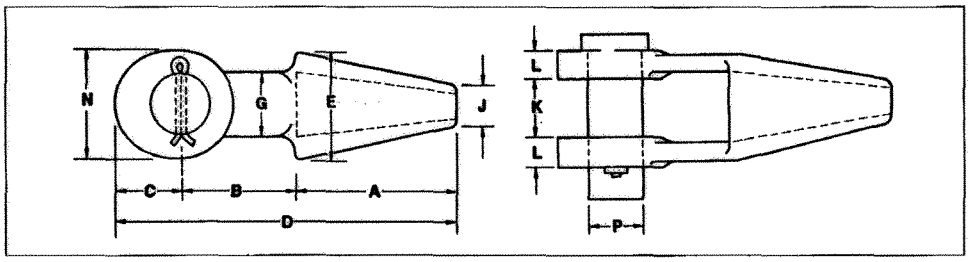

Table of Dimensions

Strand Diameter,* in.	Rope Diameter,* in.	A in.	B in.	C in.	D in.	E in.	G in.	J in.	K in.	L in.	N in.	P in.	Approx. Wt., lb.
½	9/16 & ⅝	3	2½	1¼	6¾	2¼	1¼	1⅛	1¼	9/16	2¼	1 3/16	3.8
9/16 & ⅝	¾	3½	3	1 7/16	7 15/16	2⅝	1½	1¼	1½	⅝	2⅝	1⅜	6.0
11/16 & ¾	⅞	4	3½	1¾	9¼	3⅛	1¾	1½	1¾	¾	3⅛	1⅝	10.0
13/16 & ⅞	1	4½	4	2 1/16	10 9/16	3⅝	2	1¾	2	⅞	3¾	2	15.0
15/16 & 1	1⅛	5	4½	2 5/16	11 13/16	4	2⅜	2	2¼	1	4⅛	2¼	23.0
1 1/16 & 1⅛	1¼ & 1⅜	5½	5	2 11/16	13 3/16	4⅝	2¾	2¼	2½	1⅛	4¾	2½	32.0
1 3/16 & 1¼	1½	6	6	3⅛	15⅛	5¼	3	2¾	3	1 3/16	5⅜	2¾	47.0
1 5/16 & 1⅜	1⅝	6½	6½	3¼	16¼	5½	3¼	3	3	1 5/16	5¾	3	55.0
1 7/16 & 1⅝	1¾ & 1⅞	7½	7	3¾	18¼	6⅜	3⅞	3⅛	3½	1 9/16	6½	3½	85.0
1 11/16 & 1¾	2 & 2⅛	8½	9	4	21½	7⅜	4¼	3¾	4	1 13/16	7	3¾	125.0
1 13/16 & 1⅞	2¼ & 2⅜	9	10	4½	23½	8¼	4⅜	4	4½	2⅛	7¾	4¼	165.0
1 15/16-2⅛	2½ & 2⅝	9¾	10¾	5	25½	9¼	4⅝	4½	5	2⅜	8½	4¾	252.0
2 3/16-2 7/16	2¾ & 2⅞	11	11	5¼	27¼	10¾	4⅞	4⅞	5¼	2⅞	9	5	315.0
2½ & 2⅝	3 & 3⅛	12	11¼	5¾	29	11½	5¼	5¼	5¾	3	9½	5¼	380.0
2¾ & 2⅞	3¼ & 3⅜	13	11¾	6⅛	30⅞	12¼	5¾	5¾	6¼	3⅛	10	5½	434.0
3 & 3⅛	3½ & 3⅝	14	12½	6¾	33¼	13	6¼	6½	6¾	3¼	10¾	6	563.0
3¼-3⅝	3¾-4	15	13½	7¾	36¼	14¼	7	7¼	7½	3½	12½	7	783.0
3¾-4	•	16	15	7¾	38¾	15¼	8½	7¾	8	3¾	14	7¼	1018.0
4⅛-4⅜		17	15½	8¾	41¼	16¼	9	8¾	9	4⅛	15½	8¼	1186.0

*Larger sizes available on request.

ILLUSTRATION HOOK 4.0

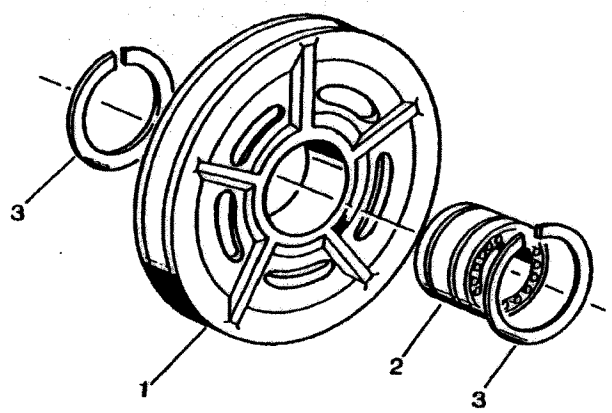

Pos.	Artikel Item Article	Menge Quantity Quantite	Bezeichnung Description Description		Seite
1	77 39 536 08	1	SEILROLLE RD572X63 PA6G SPF-982205114-6	ROPE PULLEY	
2	74 65 066 08	1	WAELZLAGER 150X210X80	ROLLER BEARING	
3	42 80 090 08	2	SICHERUNGSRING 210X5 DIN 471	LOCKING RING	

24.5.2002 010033	LTM 1250/1 Werknr. 070502	459
LIEBHERR	SEILROLLE KPL. ROPE PULLEY COMPL.	3 104 004 92 52 034 08

ILLUSTRATION HOOK 5.0

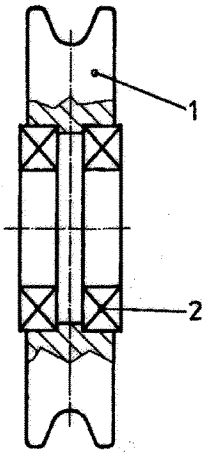

Pos.	Artikel Item Article	Menge Quantity Quantite	Bezeichnung Description Description		Serie
1	28 81 601 08	1	SEILROLLE RD300X60 PA6G	ROPE PULLEY	
2	74 51 496 08	2	RILLENKUGELLAGER 6216-2RS DIN 625	GROOVED BALL BEARING	

24.5.2002 133133 LIEBHERR	LTM 1250/1 Werknr. 070502 SEILROLLE KPL. ROPE PULLEY COMPL.	505 3 553 002 92 75 229 08

ILLUSTRATION HOOK 6.0

As a rope is run through a groove, both become smaller. A used groove can be too small for a new rope; thus accelerating rope wear. A compromise between rope life and machining frequency must be made.

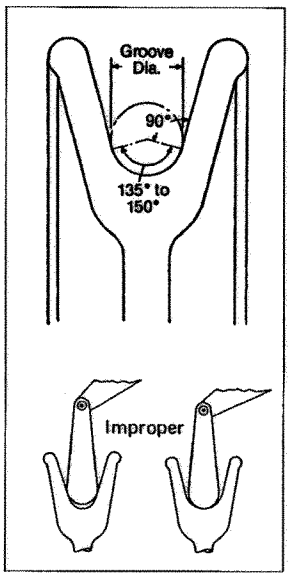

Grooves should have an arc of contact with the wire rope between 135 and 150 degrees. They should be tapered to permit the rope to enter and leave the groove smoothly. Field inspection groove guages are made to the nominal diameter of the rope plus ½ of the alllowable rope oversize tolerance. When the field inspection guage fits perfectly, the groove is at the minimum permissible contour.

Calculating Drum Capacity

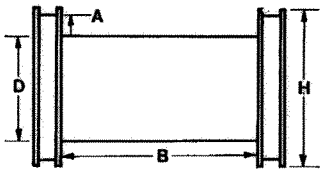

The length of rope that can be wound on a drum or reel may be calculated as follows. L = the length of rope in feet. All other dimensions are in inches.

$L = (A + D) \times A \times B \times K$

K= Constant obtained by dividing .2618 by the square of the actual rope diameter.

Values of K			
Rope Dia.	K	Rope Dia.	K
1/4″	3.29	1 1/8″	.191
5/16″	2.21	1 1/4″	.152
3/8″	1.58	1 3/8″	.127
7/16″	1.19	1 1/2″	.107
1/2″	.925	1 5/8″	.0886
9/16″	.741	1 3/4″	.0770
5/8″	.607	1 7/8″	.0675
3/4″	.428	2″	.0597
7/8″	.308	2 1/8″	.0532
1″	.239	2 1/4″	.0476

$A = \frac{H - D}{2}$ – Desired clearance, in inches.

B = Traverse in inches.
D = Barrel Diameter in inches.
H = Flange Diameter in inches.
L = Rope length in feet.

WIRE ROPE GROUP

TABLE OF CONTENT

ITEM DESCRIPTION 18
INSPECTION AND ANALYSIS – WIRE ROPE 19
TYPES 20
ILLUSTRATION WIRE ROPE 1.0 21
ILLUSTRATION WIRE ROPE 2.0 22
ILLUSTRATION WIRE ROPE 3.0 23
ILLUSTRATION WIRE ROPE 4.0 24
ILLUSTRATION WIRE ROPE 5.0 25
ILLUSTRATION WIRE ROPE 6.0 26
ILLUSTRATION WIRE ROPE 7.0 27
ILLUSTRATION WIRE ROPE 8.0 28

ITEM DESCRIPTION

WIRE ROPE

The load line on this crane is designed specifically to be used as running wire rope. This means the rope is designed to travel through and around sheaves located within the hook block and the boom-point head to the hoist drums located on the superstructure.

The wire rope is designed to perform to the necessary bending, wear, and fatigue factors common in hoisting operations. It is made up of three components; wires, strands, and a core rope usually IWRC. In order to meet U.S. standards the ropes may only be loaded to a fraction of the breaking strength or ultimate strength. Six and eight strand ropes shall work with a factor of safety of no less than 3.5:1. Rotation resistant rope shall work with no less than a factor of safety of 5:1.

INSPECTION AND ANALYSIS - WIRE ROPE
(SINGLE POINT FAILURE)

Inspection and maintenance of the load cable is an ongoing process.

The load cable (wire rope) is constantly monitored for signs of fatigue, wear, broken wires, valley wire breaks, flat spots, kinks, broken strands, and bird caging.

The inspection minimum standard for wear is based on the diameter of the rope. For example, a one inch wire rope must be removed from service when it has lost 3/16 of its diameter. It must also be removed when it has loss 1/3 of the diameter of the outside strand wires.

Six and eight strand ropes must be removed when six randomly broken wires are present in one rope lay or three broken wires in one strand in a rope lay. A rope lay is the distance it takes for one rope strand to travel 360 degrees around the rope.

Rotation resistant rope must be removed when two broken wires are present within six rope diameters and four broken wires are present within 30 rope diameters.

Failure of the load cable will result in loss of load.

A visual inspection of the wire rope shall be performed during the pre-lift meeting by the operator, lift coordinator or designated N.S.I. staff.

4-08-09

TYPES

MANUFACTURER:

UNKNOWN

TYPE: ONE OF THE FOLLOWING:

6 X 19 IWRC FS 3.5:1
6 X 25 IWRC FS 3.5:1
8 X 25 IWRC FS 3.5:1
8 X 19 IWRC FS 3.5:1
DYFORM-18-HSLR FS 5:1

SPECIFICATIONS:

DIAMETER: 23MM

WEIGHT:

BREAKING STRENGTH UNKNOWN

ILLUSTRATION WIRE ROPE 1.0

WIRECO WR WIRE ROPE Techreport

WIRE ROPE CORPORATION OF AMERICA, INC., ST. JOSEPH, MO. REPORT NO. 107

WIRE ROPE INSPECTION

Periodic inspections of wire ropes in use are necessary for one very important reason: Wire rope is a "consumed" item. It is literally "used up" as it is used, and gradually loses strength during its useful life.

The purpose of an inspection, then, is simply to ascertain – insofar as may be possible – whether a wire rope retains sufficient capability to perform the work to be done before the next scheduled inspection.

That regular inspections are required by certain governmental regulations is, in a sense, of secondary importance – since the need to perform such inspections would exist anyway.

But the government does require machine owners and/or users to conduct regular, proper inspections, and to keep written records of such inspections . . . and the burden of this requirement is upon the owner/user.

Probably the primary rule to follow in conducting a wire rope inspection on any typical machine or piece of equipment is that each wire rope must be considered individually.

This individual treatment is particularly important when inspecting so-called "standing" ropes – those which are primarily supporting, or structrual, members. For example, the pendants which support long crane booms are frequently made up of several sections, each of which is an individual rope and must be examined individually.

Because different inspection criteria frequently apply, so-called "standing" ropes should be inspected separately from the "running", or operating, ropes on the same machine or installation. Practicalities may dictate that parts of both running and standing ropes be inspected on the same trip to some high or inconvenient location on an installation – but never-the-less, each rope must be given individual attention, and the pertinent information on each rope must be recorded separately.

It should not be necessary to point out, but it must be emphasized, that a proper inspection cannot be made when a wire rope is supporting a load or is in motion. A rope should be "relaxed and at rest" during the inspection. An exception might be certain types of conveyor and tramway ropes.

Several tools are useful in inspections. These include:

- An awl and a marlin spike.
- A caliper.
- A steel tape.
- Two groove gauges.
- Chalk.
- Wiping cloths.
- Pencil, paper and carbon paper.

The manufacturer's handbook or Operator's Manual for the machine involved, and copies of pertinent governmental and other inspection criteria and specifications are also useful.

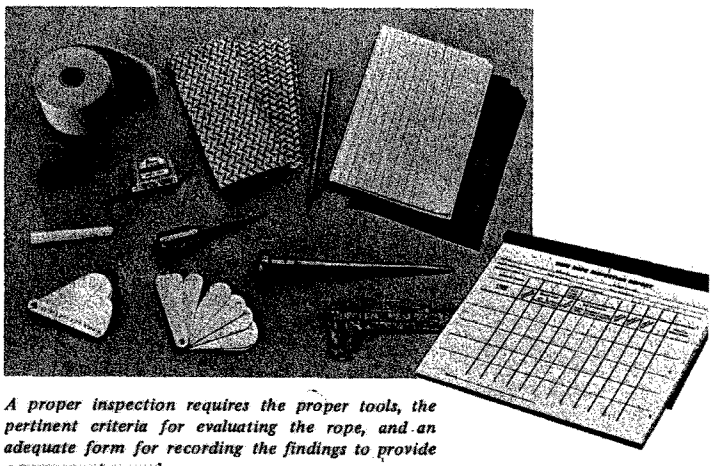

A proper inspection requires the proper tools, the pertinent criteria for evaluating the rope, and an adequate form for recording the findings to provide a permanent record.

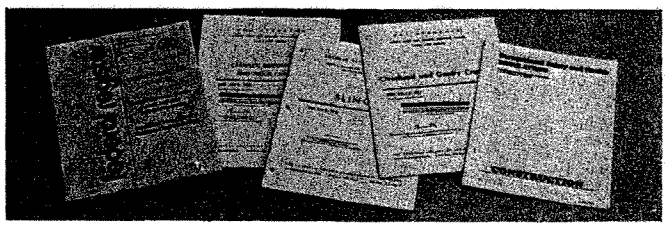

ILLUSTRATION WIRE ROPE 2.0

End Attachments

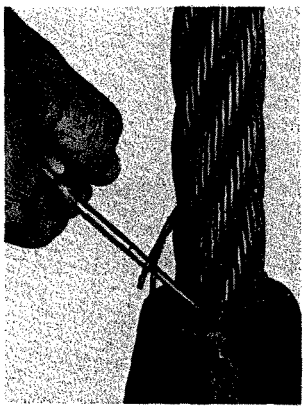

All end attachments have one characteristic in common: all restrict, to some degree, the free movement of wires at the end of the rope. This impairment of the ability of wires to adjust and move at the end can ultimately result in breakage of wires at the point where restriction occurs.

Thus, broken wires are a primary concern when inspecting end attachments on a rope. A single broken wire is usually reason to question continued use of the rope, and more than one is usually sufficient cause for rejection.

Broken wires may be more difficult to locate at end fittings than in other sections of rope. An awl used to pick and probe at the point where strands enter the end attachment can often expose broken wires not otherwise visible.

Another problem frequently encountered at end fittings is corrosion or rust. Such corrosion can easily conceal broken wires, and if left to accumulate can erode the surface of wires to weaken them, or can restrict normal wire movement.

Inspection of rope ends should also include the condition of the actual attachment – worn eyes, missing thimbles, bent or "opened" hooks, worn clevis pins, and so on.

Measuring Diameter

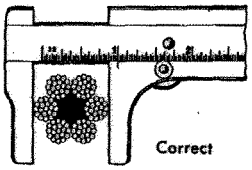

Every periodic inspection must include diameter measurement at critical points – and recording of measurements for future comparsions.

Most inspection standards are specific on permissable reductions in diameter, and the criteria for the installation and industry involved should be known by the inspector before starting to take measurements.

Measurements are proper only when made across the "crowns" of rope strands, so that the true diameter is the widest diameter at any given point on the rope. Always rotate the caliper on the rope – or the rope inside the caliper – to take a measurement.

Reductions in diameter are caused by several factors, including:

Initial "Pull-Down" – All ropes are manufactured larger than nominal diameter. When placed in operation the first time, strands of a new, unused, rope will "seat in", and the diameter will be "pulled down" from its original diameter. Therefore, the first measurements should be made and recorded for future reference after the time of such a rope's initial loading.

Normal Wear – In normal usage, the outer wires, particularly on the crowns of strands, will exhibit wear. Various inspection standards are specific as to the amount of such metal loss permissible.

Internal Rope Damage – When the core of a wire rope has begun to deteriorate, diameter reduction is often the first detectable outward sign. Impending internal breakdown should always be suspected when a sudden or significant diameter reduction is noted, and if possible, an internal rope examination should be made.

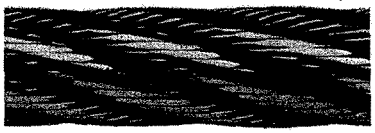

Regular Lay

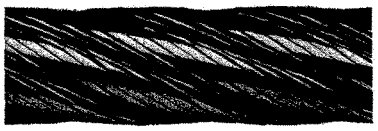

Lang Lay

This picture simulates 6x25 fw construction wire ropes with surface wear (only) of 1/3 the outer wire diameter.

Measuring Rope Lay

One rope lay is the length along the rope which a single strand requires to make one complete spiral, or "turn", around the core. It is an engineering factor in the design of a rope, and is carefully controlled during manufacture.

Since there is often some "adjustment" in rope lay during the initial "break-in" stages of a rope's usage, it is recommended that rope lay measurements should be made after the initial loading, for comparison purposes at succeeding periodic inspections.

One method for measuring rope lay is with ordinary carbon paper, blank white paper and a pencil. Firmly hold the paper and carbon on the rope and

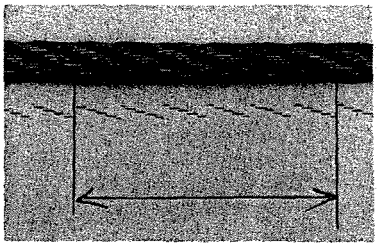

ILLUSTRATION WIRE ROPE 3.0

How Often to Inspect

Quite obviously, the greater the usage a rope receives, the more often inspections would be indicated. Typical Occupational Safety and Health Act (OSHA) regulations state:

"A thorough inspection of all ropes shall be made at least once a month and a full written, dated, and signed report of rope condition kept on file where readily available."

OSHA Specification 1926.602 refers to Power Crane and Excavator Standards for material handling equipment as follows, regarding wire rope inspections (8.2.1.2):

"All wire ropes in active service should be visually inspected once each working day. A thorough inspection of such ropes should be made at least once a month and dated records kept as to rope conditions."

The OSHA regulations for overhead and gantry cranes states:

"Inspection procedure for cranes in regular service is divided into two general classifications based upon the intervals at which inspection should be performed . . . designated as 'frequent' and 'periodic' with respective intervals between inspections . . . (a) Frequent inspection – daily to monthly intervals. (b) Periodic inspection – 1 to 12-month intervals."

The foregoing would seem to underscore the wisdom of many machine users who insist on a daily or workshift, visual inspection of all the elements in a wire rope system. The OSHA Regulations, however, are specific with reference to written and signed reports on thorough, periodic inspections.

'Critical' Points

There are certain points along any given rope which should receive more attention than others, since some areas will usually be subjected to greater internal stresses, or to greater external forces and hazards.

Carefully select the most critical points for close inspection – points where failure would be most likely to occur. The same critical points on each installation should be compared at each succeeding inspection.

Critical points which should be considered for careful inspection on most installations would include the following:

Pick-up Points – These are sections of rope which are repeatedly placed under stress when the initial load of each lift is applied – such as those sections in contact with sheaves.

End Attachments – At each end of the rope, two things must be inspected: the fitting that is attached to the rope, or to which the rope is attached . . . and the condition of the rope itself, where it enters the attachment.

Equalizing Sheaves – The section of a rope which is in contact with and adjacent to such sheaves, as on boom hoist lines, should receive careful inspection.

Drums – The general condition of the drum, and condition of grooves if the drum is grooved, should receive careful inspection – as should the manner in which the rope "spools" onto the drum.

Sheaves – Every sheave in the rope system must be inspected and checked with a groove gauge.

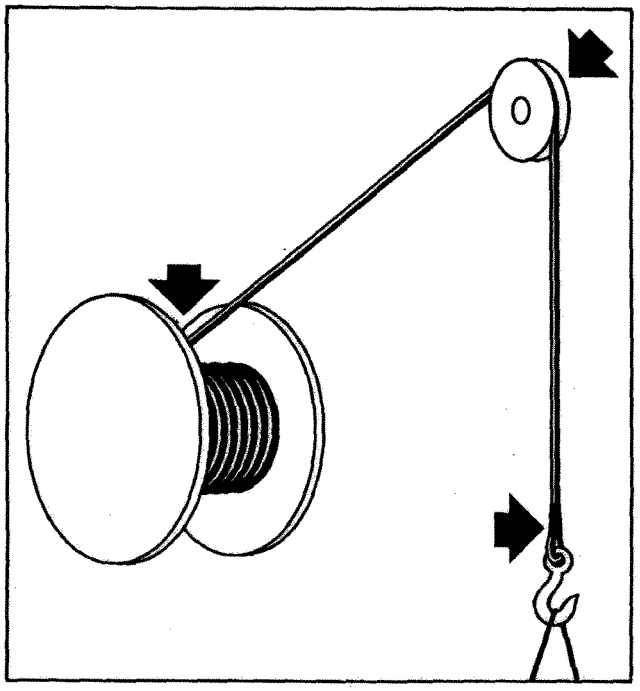

Heat Exposure – Be especially watchful for signs that a rope has been subjected to extreme heat, or to repetitive heat exposure.

Abuse Points – Frequently ropes are subjected to abnormal scuffing and scraping, such as contact with crossmembers of a boom. Look for "bright" spots.

It must be kept in mind that minor – and frequently major – differences exist between installations, even on machines of a similar design. Therefore, points on each rope selected for close examination will necessarily require the best judgement of the inspector.

ILLUSTRATION WIRE ROPE 4.0

Making an Internal Rope Examination

Anytime interior damage, broken wires or core failure may be suspected, a section of rope should be opened for internal examination. This may be accomplished without destroying the rope's future usefulness if due care is exercised and wires are not kinked or notched.

A rope can be opened for internal inspection only when completely relaxed. Using due care, "work" a marlin spike beneath two strands and rotate the spike to expose the core and "under" side of strands. Use an awl to probe for broken wires and examine inner surfaces.

If the rope has an independent wire rope core, look for broken wires on the "under" sides of strands where the strands contact the IWRC. Look for excessive "nicks" or broken wires in the strands caused by contact between adjacent strands or with IWRC. Examine the IWRC for broken wires also.

In the case of fiber core ropes, examine the core for excessive breakage of fibers. If short pieces of fiber – less than 1/4 inch long – sift out of the core, it is breaking up. Such short, broken fibers sometimes indicate the rope is being over-loaded, pinched in tight sheaves, or subjected to other abuse.

If a rope has been opened properly and carefully – and internal condition does not show cause for removal – strands can be returned to their original working positions without distorting the rope or impairing future usefulness.

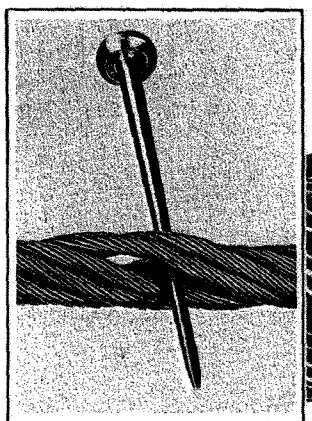

To open a rope, insert marlin spike beneath two strands and rotate to lift strands and provide view of interior.

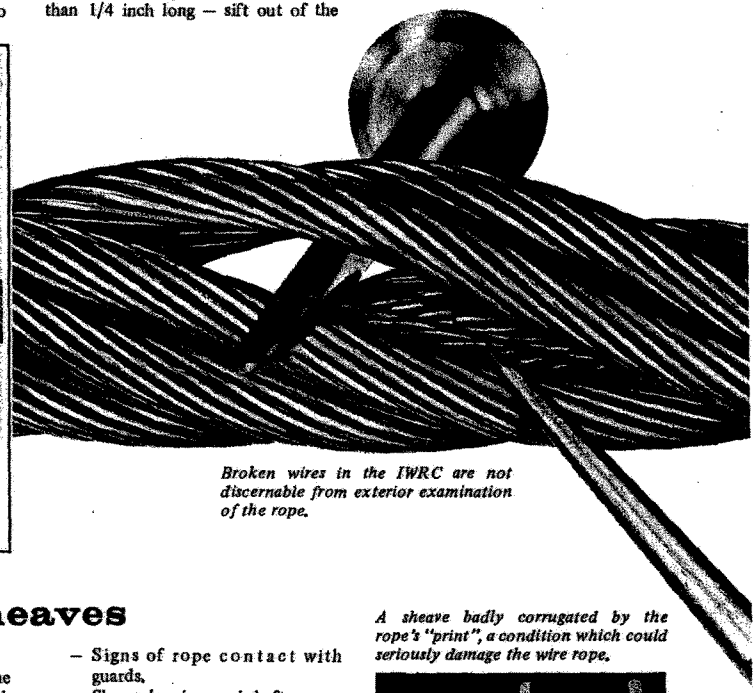

Broken wires in the IWRC are not discernable from exterior examination of the rope.

Inspecting Sheaves

Almost every rope installation has one or more sheaves – ranging from traveling blocks with complicated reeving patterns to equalizing sheaves where only minimal rope movement is noticeable. Each sheave should receive an individual examination at periodic inspections.

Each sheave is to be examined for the following:

- Groove depth, width and contour.
- Groove smoothness.
- Broken or chipped flanges.
- Cracks in hubs, spokes, etc.
- Signs of rope contact with guards.
- Sheave bearings and shaft.
- Out-of-round condition.
- Alignment with other sheaves.

Assessing the general physical condition of a sheave – groove smoothness, freedom from cracks and "knicks", existence of wear on guards, etc. – is a matter of careful, knowledgeable observation.

Properly gauging and evaluating the width, depth and contour of grooves with a groove gauge requires keen observation as well as knowledge of gauge design and use.

A sheave badly corrugated by the rope's "print", a condition which could seriously damage the wire rope.

ILLUSTRATION WIRE ROPE 5.0

"stroke" with the side of the pencil, so the rope's "print" is made on the paper.

By drawing a line through one strand of the "print", counting off the number of strands in the rope and then drawing another line on the print at the place where the same strand appears again, a measurement is established.

Many inspectors have found that a crayon or marking stick and a roll of adding machine tape are ideal for making a "print" at least three rope lays long – so that an average lay length can be determined.

Changes in length of lay are usually gradual throughout the working life of a rope. It is important to compare current lay measurements with previous inspection results to note any sudden changes – for an abrupt change in the pattern can be the signal of an impending problem.

As a rule, if lengthening of lay is noted WITH loss of rope diameter, internal break-up or core destruction should be suspected.

When lengthening of lay is noted WITHOUT loss of rope diameter, the rope is probably "unlaying" for some reason, and further examination should be made for the cause.

Unlaying sometimes results from operating a rope without having both ends secured to prevent rotation. An end swivel attachment permits such rotation and unlaying.

Another common cause of unlaying is worn sheaves. When the bottom of a sheave groove wears, it can restrict normal movement as the rope enters and leaves the groove; the result can be a build-up of twist which can change the length of lay.

Whatever the cause, unlaying is an abnormality, and should be noted for future reference if the immediate cause cannot be determined.

Finding Broken Wires

Probably the most common sign of rope deterioration and approaching failure is broken wires, and inspection criteria are specific as to the number of broken wires allowable under various circumstances.

It is normal for a properly designed and used "running", or operating, rope to exhibit broken wires as it approaches the end of its useful life. Under ideal conditions, the first wires to break would be the outside wires at the crowns of the strands – where surface wear is expected to occur. On "standing" ropes, wire breakage may not be so easily observed.

It is important that a diligent search be made for broken wires, particularly in critical areas such as "pick-up points" where stresses are concentrated.

The first step in looking for broken wires is to make sure the surface is clean enough that breaks can be seen. Wipe with a cloth. If necessary, scour with a wire brush to clean grease from the valleys between strands.

A thorough search for broken wires cannot be made when a rope is in tension or is supporting a load. Relax the rope, move "pick-up points" off sheaves, and flex the rope as much as possible.

With a sharp awl, pick and probe between wires and strands, lifting any wires which appear loose or move excessively.

If you find a number of broken wires approaching the maximum allowable permitted per strand or per rope lay, extend the search to other sections of the rope, and also take diameter and lay measurements in the area. If internal wire breaks or core damage are suspected, an internal examination should be made, if possible.

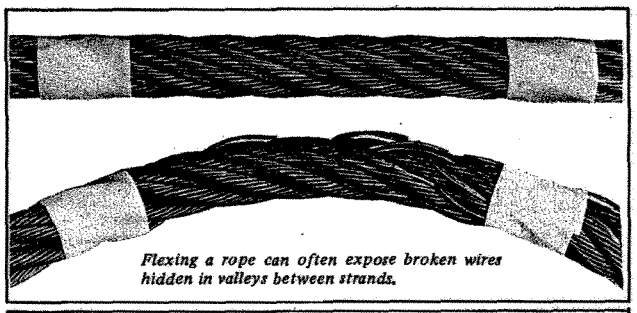

Flexing a rope can often expose broken wires hidden in valleys between strands.

One rope lay is the length along the rope which one strand uses to make one complete spiral around the core.

Number of broken wires permitted per strand in one rope lay is specified in inspection criteria for each usage.

Under ideal and normal conditions, wires should break first on the crowns of strands . . . as in this classic example of a worn out rope.

ILLUSTRATION WIRE ROPE 6.0

There are two types of wire rope groove gauges:

1. Those used by manufacturers of sheaves and drums, which make allowance for the maximum allowable oversize for wire rope, and are used to determine the proper contour for NEW grooves.
2. Those used "in the field", which are made to the nominal diameter of the rope PLUS one-half the allowable rope oversize. These are used to determine the MINIMUM condition for WORN grooves.

In a field inspection, when the gauge for worn grooves fits perfectly, the groove is at the minimum permissible contour. Anything narrower is unsuitable for use.

It is a good rule to keep in mind that, under normal operating conditions, as a groove wears it tends to become deeper and narrower. Excessive wear in an over-width manner frequently indicates some operating abnormality such as alignment.

Sheave inspection should also include the condition of bearings and shaft. With the rope "relaxed", the sheave should be rotated by hand to determine the "fit" of the bearing and effectiveness of its lubrication . . . whether the sheave runs true, without "wobbling" on its shaft . . . whether the bottom of the groove is still concentric, or "round" in relation to the shaft . . . and whether the sheave and its shaft are in proper alignment with other sheaves or components of the system.

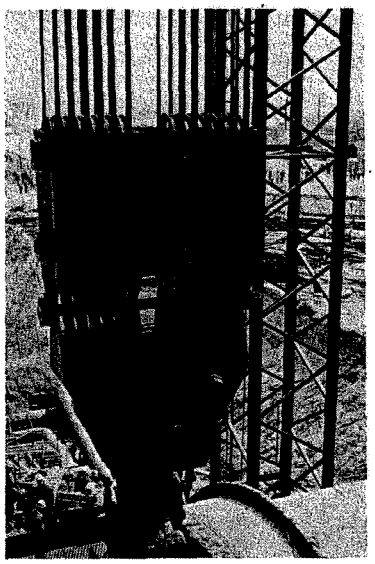

Each sheave in a multiple block is to be examined individually at each periodic inspection.

A proper fitting sheave groove should support the rope over 135-150 degrees of rope circumference.

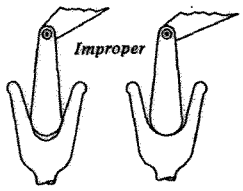

Observe the groove so that it may be clearly seen whether the contour of the gauge matches the contour of the bottom of the groove.

Evaluating Drums

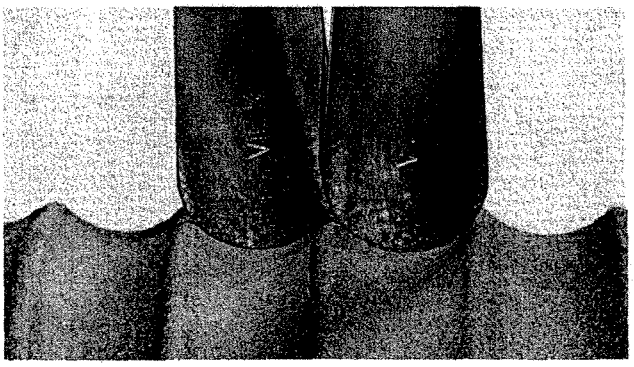

Even though both these gauges properly follow groove contours, when used side-by-side they indicate grooves are too close. Two gauges which overlap in this manner reveal that wraps of rope will scrub when spooling on to or off the drum.

Inspection criteria for drums will usually specify the following:

- Minimum number of dead wraps to remain on the drum.
- Condition of drum grooves, if a grooved drum, and the surface of a smooth drum.
- Condition of flanges at the ends of the drum.
- Rope end attachment.
- Spooling characteristics of the rope.
- Rope condition, particularly at "pick-up points" on the rope.

There is wide acceptance of the following guidelines for checking drums and drum operation.

GROOVES should be of proper contour, and checked with a groove gauge if normal tolerances apply. Bottoms of grooves should be smooth; drums

ILLUSTRATION WIRE ROPE 7.0

that become imprinted with the rope's "tread", or excessively roughened, should be corrected or replaced. Grooves should be spaced so one wrap of rope does not "scrub" the next wrap as it spools onto the drum.

SPOOLING is that characteristic of a rope which affects how it wraps onto and off a drum. Spooling is affected by the care and skill with which the first layer of wraps is applied on drums with two or more layers. Wraps should be tight, and a loose condition must be corrected. It is important to examine a rope for kinks or other damage when loose or irregular spooling has been observed.

DRUM CRUSHING is a rope condition sometimes observed which indicates deterioration of the rope. Sometimes crushing is inevitable on a given drum winding, as is deformation of the wires in the rope, usually described as peening. Crushing and peening affect rope performance insofar as these conditions impair adjustment of wires in the rope and damage the wires themselves. When observed, either condition should be noted and careful evaluation of rope made.

How to Use Inspection Forms

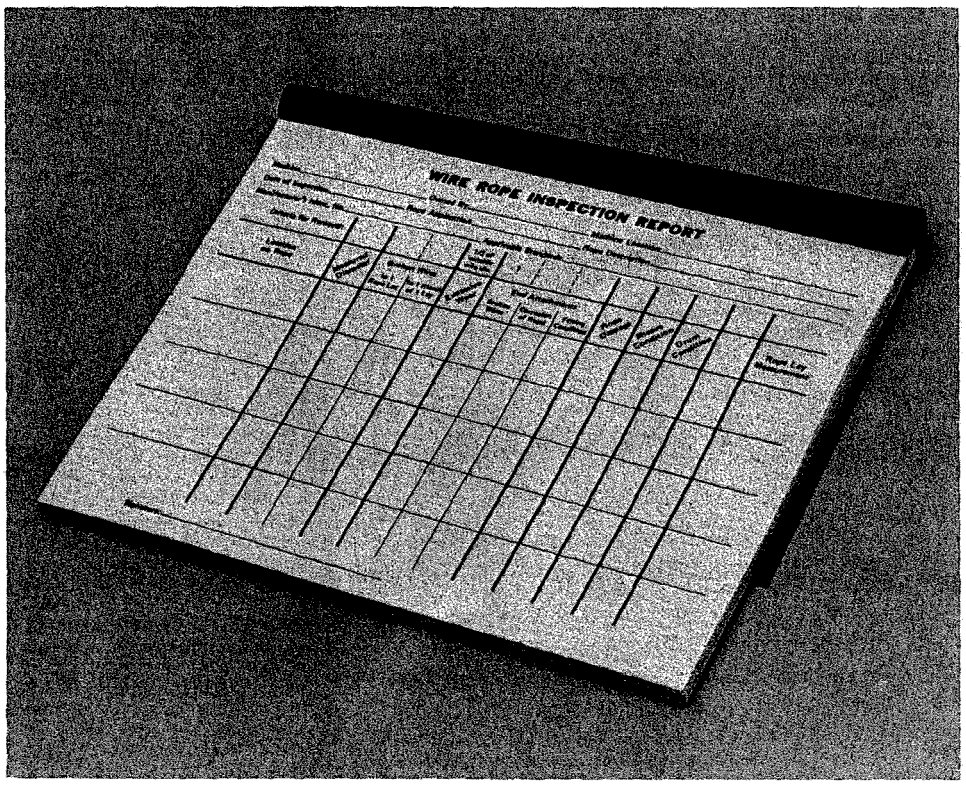

These forms were prepared to serve as a guide for making thorough periodic examinations of single wire ropes and serve as a permanent record of the inspection. One form should be used for each rope at each such inspection.

Before beginning an examination of an installation, fill in the blank spaces at the top of the form. These identify the machine or installation, its owner, location, date, etc.

"Rope Application" refers to the specific usage of the rope . . . such as "Main Hoist", or "Boom Pendant", or "Boom Hoist".

After "Rope Description", fill in the diameter, construction, type, etc. . . . such as 1 in. 6x25 FW PRF RLL XIP IWRC.

After "Manufacturer's Ident. No.", insert data which will positively identify this rope . . . preferably the manufacturer's "reel number" which identifies the reel from which the rope was taken. The manufacturer's original purchase invoice or the shipping reel tag

ILLUSTRATION WIRE ROPE 8.0

usually carries this number.

The "Applicable Standards" refer to that set of inspection criteria applicable to this installation which can be found in standards and regulations . . . such as ANSI B30.2 for Overhead & Gantry Cranes or Federal Regulations such as OSHA.

It is the inspector's responsibility to obtain the proper inspection criteria for the application to be inspected.

At the column headings to the right of the words "Criteria for Removal", space is provided for the inspector to fill in specific criteria pertaining to each column. Two of these headings are filled in with criteria applicable to all wire rope installations – "1/3 of outside wire diameter" is the maximum wear permissible. One (1) broken wire is the maximum number permissible at end attachments. Fill the other blank spaces with data taken from the proper set of criteria for the machine involved.

A blank column is provided for inspector's use if it is desirable to check any other factor which is not listed on this form.

At the time of each inspection of an installation, refer back to previous inspection records to determine locations on each rope which should be inspected. If the installation has not previously had a thorough inspection, sound judgement should be used in selecting these locations. "Critical Points" should be given first consideration.

The same locations on each rope should be examined carefully at each succeeding inspection so that rope diameter, lay, etc., may be compared to previous measurements in order to detect change in the rope condition. Sudden changes in condition may indicate deterioration.

At each inspection location on a rope, clean the rope sufficiently to be able to find broken wires and to take precise measurements. To be useful, measurements must be accurate.

For each inspection location selected on each rope, describe on the Inspection Report the exact location – such as "Boom point sheave at pick-up". Then, in the order in which columns are established on the Report form, make the indicated observations and write down the information:

1. Measure diameter.
2. Examine for broken wires, (a) in one rope lay, and (b) in one strand of one rope lay. When a broken wire is found, look carefully for others. Record the number of breaks in that rope lay where the most breaks are found.
3. At this same location, inspect for excessive wear.
4. If the examination is being made at a rope dead-end, check for broken wires, corrosion and condition of the fitting.
5. A lay measurement should also be taken at the location selected for inspection.
6. Examine the entire rope end-to-end for evidence of external damage or abuse. Where damage or abuse is noted, proceed to make all the same observations for this location as at any "regular" inspection point. Try to determine the exact cause of any external damage so that "recurring" damage may be prevented.
7. Every sheave should receive a thorough examination and the condition recorded. When the rope "pick-up point" is being examined at a sheave, the data on the sheave can be recorded at that space on the form.
8. Examine and record the drum condition. In a proper inspection, the drum should be observed both in operation and at rest, in order to observe "spooling".

To provide space for all these measurements, five horizontal spaces are provided on each Inspection Report form. Should these not be sufficient for extremely long ropes, or for any other reason, these spaces may be divided with horizontal lines – or a second form used.

When an inspection is completed – or has proceeded far enough for the inspector to decide that rejection is in order – the form should be signed by the inspector. Comments may also be written at the bottom, if desired.

Federal regulations require that signed inspection reports must be maintained on file for all ropes in active service.

DRUMS & WINCH (HOIST) GROUP

TABLE OF CONTENT

ITEM DESCRIPTION 30
HOIST MOTOR COMPONENTS 31
DETAILED DESC. BRAKING SYSTEM-LIEBHERR HOISTING SYSTEMS 32
INSPECTION AND ANALYSIS – DRUM & WINCH (HOIST) GROUP 34
DRUMS & WINCH (HOIST) ILLUSTRATION 1.0 35
DRUMS & WINCH (HOIST) ILLUSTRATION 2.0 36

ITEM DESCRIPTION

The hoist mechanism consists of a drum, hydraulic motor, and load breaking system to slow or stop the movement of the load. The hydraulic motor rotates the drum either raising or lowering the load with the installed wire rope and hook block assembly.

HOIST MOTOR COMPONENTS

The hoist motor provides the means of moving the drum in order to raise and lower loads.

This motor has restricted flow valves and internal planetary gears to control lowering and hoisting. There are no single failures in this system.

Both the hydraulic and electrical systems have circuit breakers and check valves that will prevent accidental loss of load if electric or hydraulic pressure is lost.

The component illustrations in this report, while not exact, are similar in their makeup and have been submitted to clarify how the hoist motor functions.

DETAILED DESCRIPTION OF BRAKING SYSTEM

LIEBHERR HOISTING SYSTEMS

Liebherr cranes utilize a hydraulically controlled hoist system. Failure of any one single internal component cannot cause loss of load. Power to the winch is supplied by an attached hydraulic motor. A combination of hydraulic and electrical power must be present or the load will remain stationary. The winch uses a disc-type brake that is pressure released.

The winch engages a sprag clutch to cause a planetary gear system to operate the winch in the up or down direction. The sprag clutch cannot engage in the absence of pressure. If engine, pump, piping, valve, or electrical failure occurs, the sprag clutch will not be engaged, the brake will not release, and the hoist and or load will be held stationary.

The planetary gear system consists of a single gear (sun gear) that powers the hoist and drum in the upward direction. In order to lower the load, the sprag clutch is engaged to hold a series of free floating or rotating gears (planetary gears) in a stationary position. This causes the planetary gears to drive the winch drum in the down direction.

Should the disc-brake fail the load will not move due to the above system. The brake provides a holding function and is not intended to provide a controlling function. Load control and speed is provided by control valves that regulate pressure and flow of the hydraulic fluid. In the event of brake failure (while holding the load stationary) the load could not move without also having a control valve failure. Due to restricted flow ports or detents, the load would lower slowly. While in motion the load is controlled by hydraulic pressure in both the up and down positions and the load will remain stationary when the operator returns the control lever to the neutral position closing the control valve.

If electrical failure should occur the system will not operate due to the cranes load moment indicator. The LMI controls all crane actions and will not allow electrically operated pilot valves to open.

DETAILED DESCRIPTION OF BRAKING SYSTEM
LIEBHERR HOISTING SYSTEMS (CONTINUED)

Should hydraulic lines, piping or pumps fail the loss of pressure and flow will render the hoist inoperative.

Modern hydraulic mobile cranes do not have redundant braking systems such as those found on overhead traveling cranes or gantry cranes. The design of hydraulic hoist makes them unnecessary.

INSPECTION AND ANALYSIS – DRUM & WINCH (HOIST) GROUP

(SINGLE POINT FAILURE)

Each hoist located on the rear upper superstructure is secured by high strength screw caps. Not a single point failure but a visual inspection of the screw caps should be done by the crane operator or some other qualified person on the lift team during the pre-lift meeting.

4-08-09

DRUMS & WINCH (HOIST) ILLUSTRATION 1.0

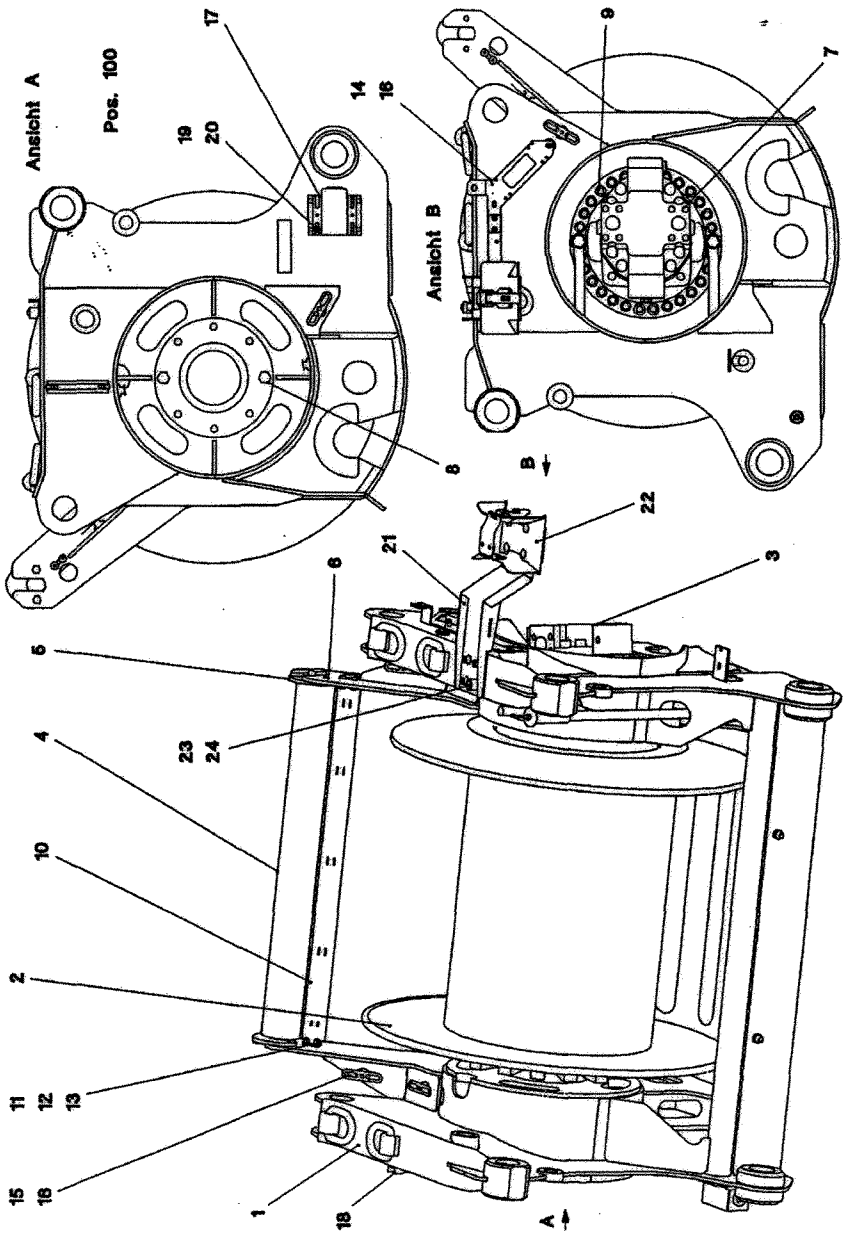

24.5.2002 026863	LTM 1250/1 Werknr. 070502	276
LIEBHERR	WINDE II VORM. WINCH II PRE-ASS.	2 440 022 96 17 155 08

DRUMS & WINCH (HOIST) ILLUSTRATION 2.0

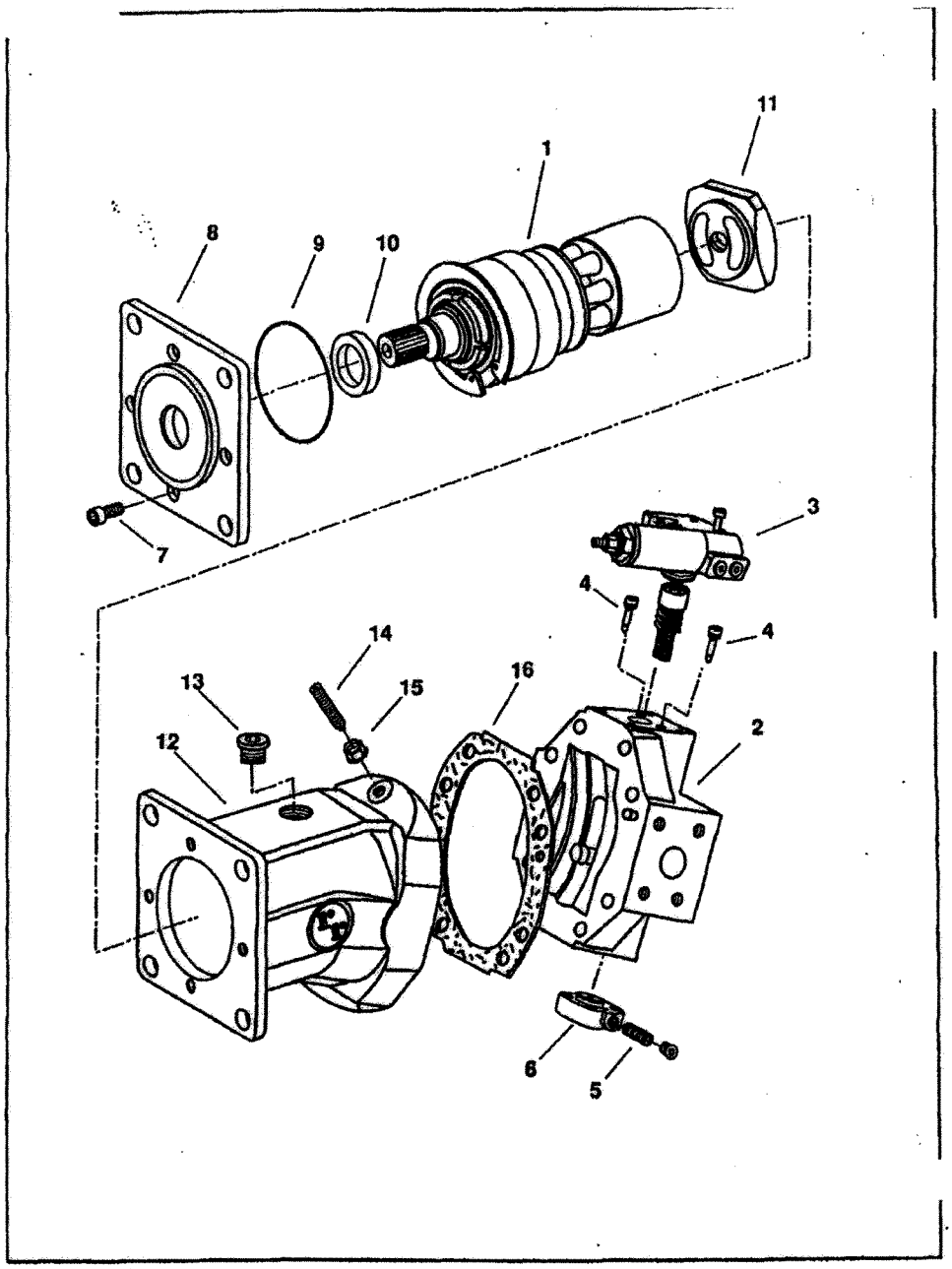

7-632-000764

BOOM NOSE GROUP

TABLE OF CONTENT

ITEM DESCRIPTION 38
SPECIFICATIONS 39
INSPECTION AND ANALYSIS - UPPER SHAFT 40
INSPECTION AND ANALYSIS - LOWER SHAFT 41
ILLUSTRATION BOOM GROUP 1.0 42
ILLUSTRATION BOOM GROUP 2.0 43
ILLUSTRATION BOOM GROUP 3.0 44

ITEM DESCRIPTION

BOOM NOSE

The Boom Nose is located at the outer most end of the telescopic boom. The standard boom point contains 7 sheaves that can be used for up to 15 parts of line.

The boom nose is also equipped to accept a lattice boom extension.

SPECIFICATIONS

MANUFACTURER:

LIEBHERR

TYPE:

FIXED

MULTI PART

LATTICE EXTENSION COMPATABLE

CAPACITY:

250 METRIC TONS

TWO HOIST LINES

15 PARTS

INSPECTION AND ANALYSIS - UPPER SHAFT

The upper shaft holds the upper sheave assembly in the boom nose. Failure of this shaft will not cause loss of load but will allow the load to drop one to two feet.

This shaft should be visibly inspected by the crane operator, lift coordinator and designated person on the N.S.I. staff.

The inspection should include examination of all guards and pins, checking sheaves for vibration or wobble, insuring no unauthorized repair has been conducted. Disassembly is not required for this inspection.

4-8-09

INSPECTION AND ANALYSIS - LOWER SHAFT

The lower shaft holds the lower (main) sheave assembly in the Boom Nose. Lifts involving multiple "falls" with up to 15 parts can be used with the sheave assembly mounted on the lower shaft. Failure of the lower shaft will cause loss of load by allowing the lower sheaves to escape the Boom Nose and the load cable to unreeve itself.

The inspection of this shaft should insure that all pins and cable guides are in place. Sheaves should turn freely and not exhibit vibration or wobble. The boom nose should be free from distortions and not exhibit signs of welding modifications or unauthorized repairs.

A visual inspection of the lower shaft shall be performed during the pre-lift meeting by the operator, lift coordinator or designated N.S.I. staff. Disassembly is not required.

4-8-09

ILLUSTRATION BOOM GROUP 1.0

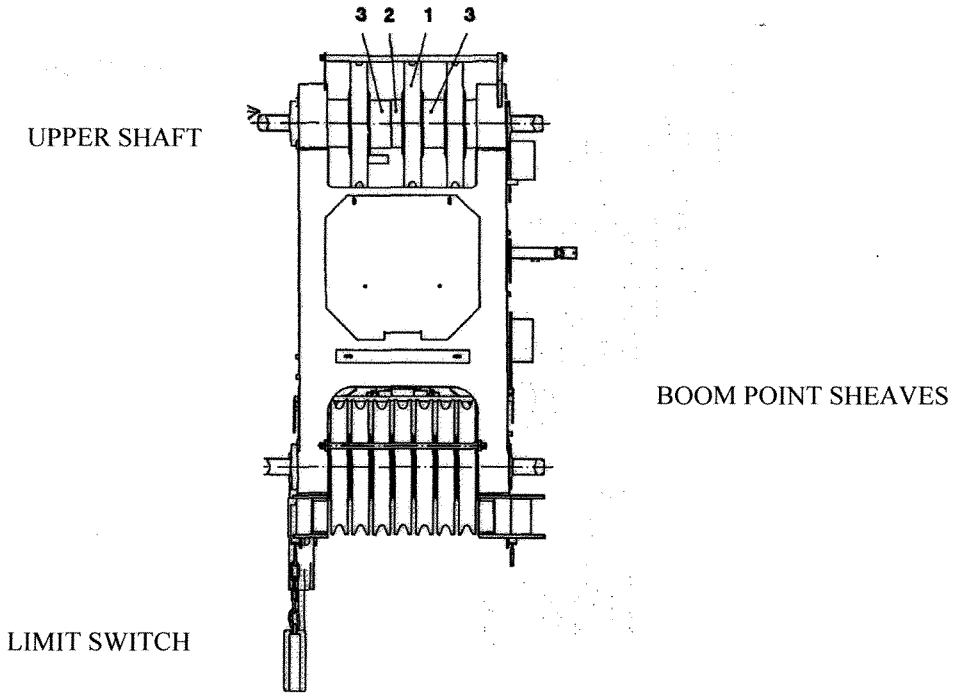

Pos.	Artikel Item Article	Menge Quantity Quantite	Bezeichnung Description Description		Serie
1	96 17 631 08	1	SEILROLLE KPL.	ROPE PULLEY COMPL.	
			-> 3 106 001 96 17 631 08		
2	97 12 453 08	1	ROHR 177.8X40 ST37.0	PIPE	
3	97 12 447 08	2	ROHR 177.8X90 ST37.0	PIPE	

24.5.2002 026284 LIEBHERR	LTM 1250/1 Werknr. 070502 2.NACKENROLLE EINBAU	497 3 280 91 07 220 08

ILLUSTRATION BOOM GROUP 2.0

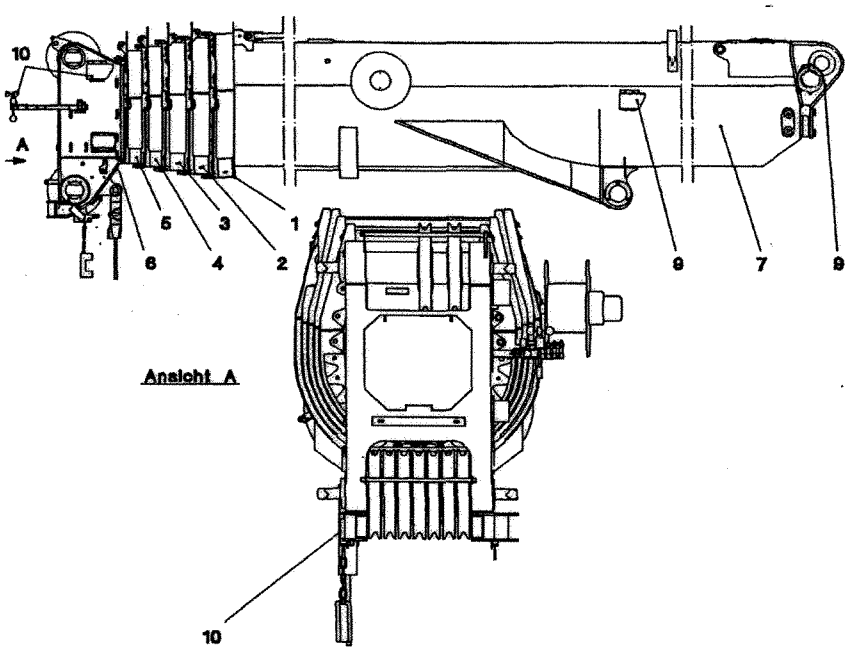

Pos.	Artikel Item Article	Menge Quantity Quantite	Bezeichnung Description Description		Serie
1	91 04 068 08	1	ANLENKSTUECK VORM --> 3 101 91 04 068 08		
2	91 04 069 08	1	TELESKOP I VORM --> 3 102 91 04 069 08		
3	91 04 070 08	1	TELESKOP II VORM --> 3 103 91 04 070 08		
4	91 04 071 08	1	TELESKOP III VORM --> 3 104 91 04 071 08	TELESCOPIC SECT.III PRE-ASSEMB	
5	91 04 072 08	1	TELESKOP IV VORM --> 3 105 91 04 072 08	TELESCOPIC IV. PRE-ASSEMBLED	
6	91 04 073 08	1	TELESKOP V VORM --> 3 106 91 04 073 08		
7	91 04 075 08	1	AUSSCHUBMECHANIK --> 3 300 91 04 075 08	MECHANICAL EXTENSION SYSTEM	
8	92 99 804 08	1	GEBERANBAU GRUNDAUSLEGER --> 3 930 462 92 99 804 08	SENSOR ASSEMBLY	
10	92 99 531 08	1	GEBERANBAU KOPFSTUECK --> 3 930 463 92 99 531 08	SENSOR ASSEMBLY	

24.5.2002 026804 LIEBHERR	LTM 1250/1 Werknr. 070502 TELESKOPAUSLEGER KPL. TELESCOPIC UNIT CPL.	445 3 100 91 03 920 08

ILLUSTRATION BOOM GROUP 3.0

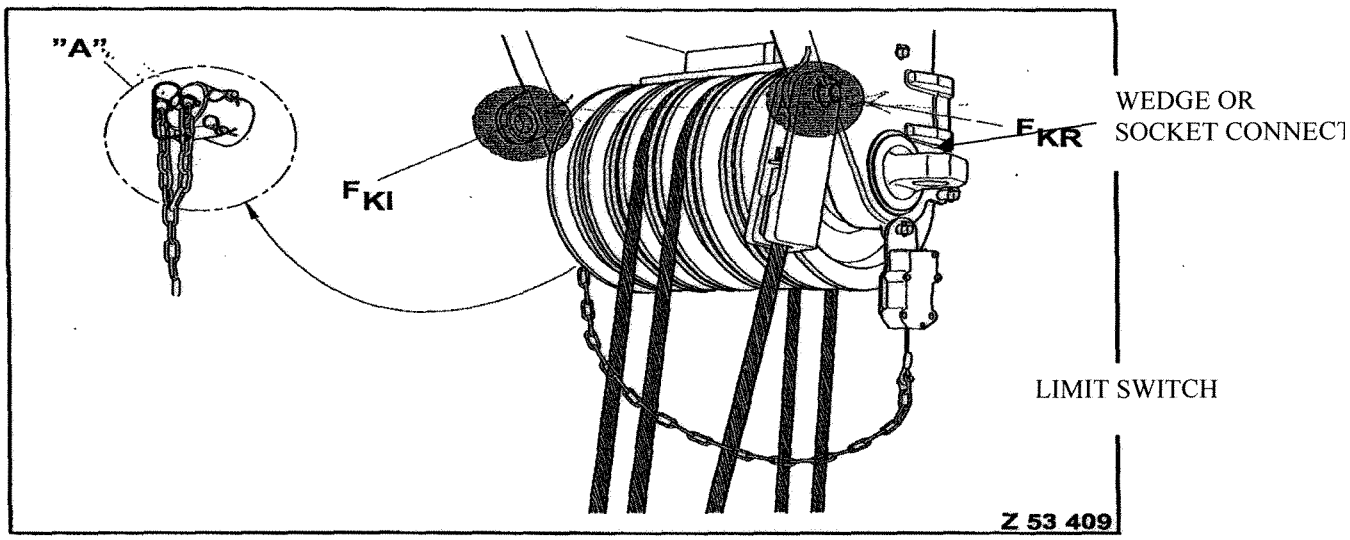

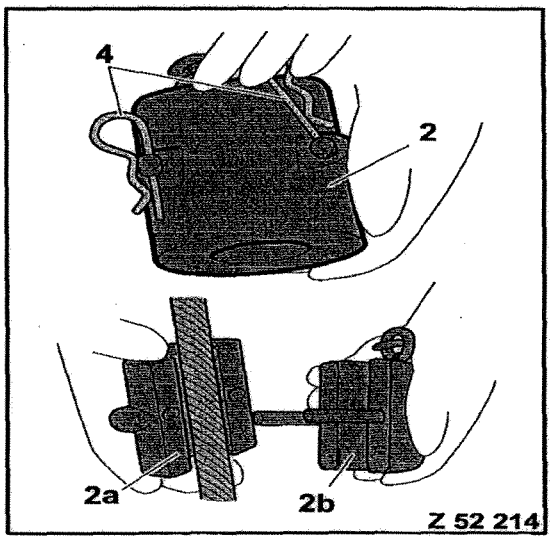

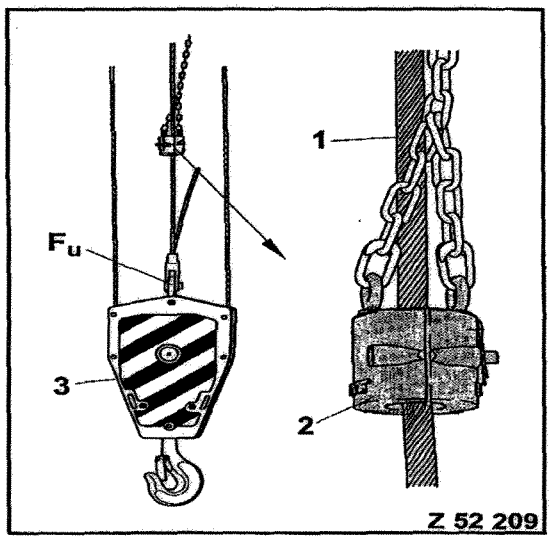

BOOM LIFT GROUP

TABLE OF CONTENT

ITEM DESCRIPTION 46
SPECIFICATIONS 47
INSPECTION AND ANALYSIS - BOOM LIFT CYLINDER ASSEMBLY 48
INSPECTION AND ANALYSIS - TELESCOPING SECTION 49
ILLUSTRATION BOOM LIFT 1.0 50
ILLUSTRATION BOOM LIFT 2.0 51
ILLUSTRATION BOOM LIFT 3.0 52

ITEM DESCRIPTION

BOOM

The hydraulic boom component of a mobile hydraulic truck crane serves several purposes. The boom is cantilever type which consists of several telescoping boom sections. The sections are moved inward and outward in a designated sequence by means of hydraulic linear actuators (cylinders). The boom provides the means to support the load line and hook block over the load to be lifted. It also allows the tip height and working radius to be adjusted as desired.

SPECIFICATIONS

MANUFACTURER:

LIEBHERR

TYPE:

FIXED

MULTI PART

LATTICE EXTENSION COMPATABLE

CAPACITY:

250 METRIC TONS

TWO HOIST LINES

15 PARTS

INSPECTION AND ANALYSIS - BOOM LIFT CYLINDER ASSEMBLY

(MAIN BOOM ASSEMBLY)

(SINGLE POINT FAILURE)

The boom lift cylinder assembly is a two way double acting hydraulic ram that enables the crane boom to be raised and lowered to a desired angle.

Should mechanical failure occur in the boom lift cylinder, the boom function would stop. Should structural failure occur and the cylinder burst or breaks, one section could separate from the other, the boom could fail causing loss of load. Should the booms heel pins seize the boom could twist causing failure and loss of load.

A visual inspection of the boom lift cylinder assembly shall be performed during the pre-lift meeting by the operator, lift coordinator or designated N.S.I. staff.

Inspection should require a visual examination of the main boom heel pin that attaches the boom to the superstructure. The heel pins should not be rotating with movement of the boom. Any physical damage visible on the outer skin of the boom sections should be compared to manufacturers allowed tolerances.

4-8-09

INSPECTION AND ANALYSIS - TELESCOPING SECTION

(SINGLE POINT FAILURE)

This Crane has multiple telescoping sections for the purpose of extending or retracting the boom. Structural failure of any boom section will cause loss of load. The boom is extended hydraulically and should the hydraulic system fail the boom would remain unchanged, except for the unlikely event of a hydraulic cylinder structural failure.

A visual inspection of the boom telescoping section shall be performed during the pre-lift meeting by the operator, lift coordinator or designated N.S.I. staff.

The inspection should consist of visually checking to insure all sections are telescoping in the manufacturers required sequence, there is no physical deterioration to the sections. The boom is straight when deployed at working length with no twisting, or leaning of the boom.

4-8-09

ILLUSTRATION BOOM LIFT 1.0

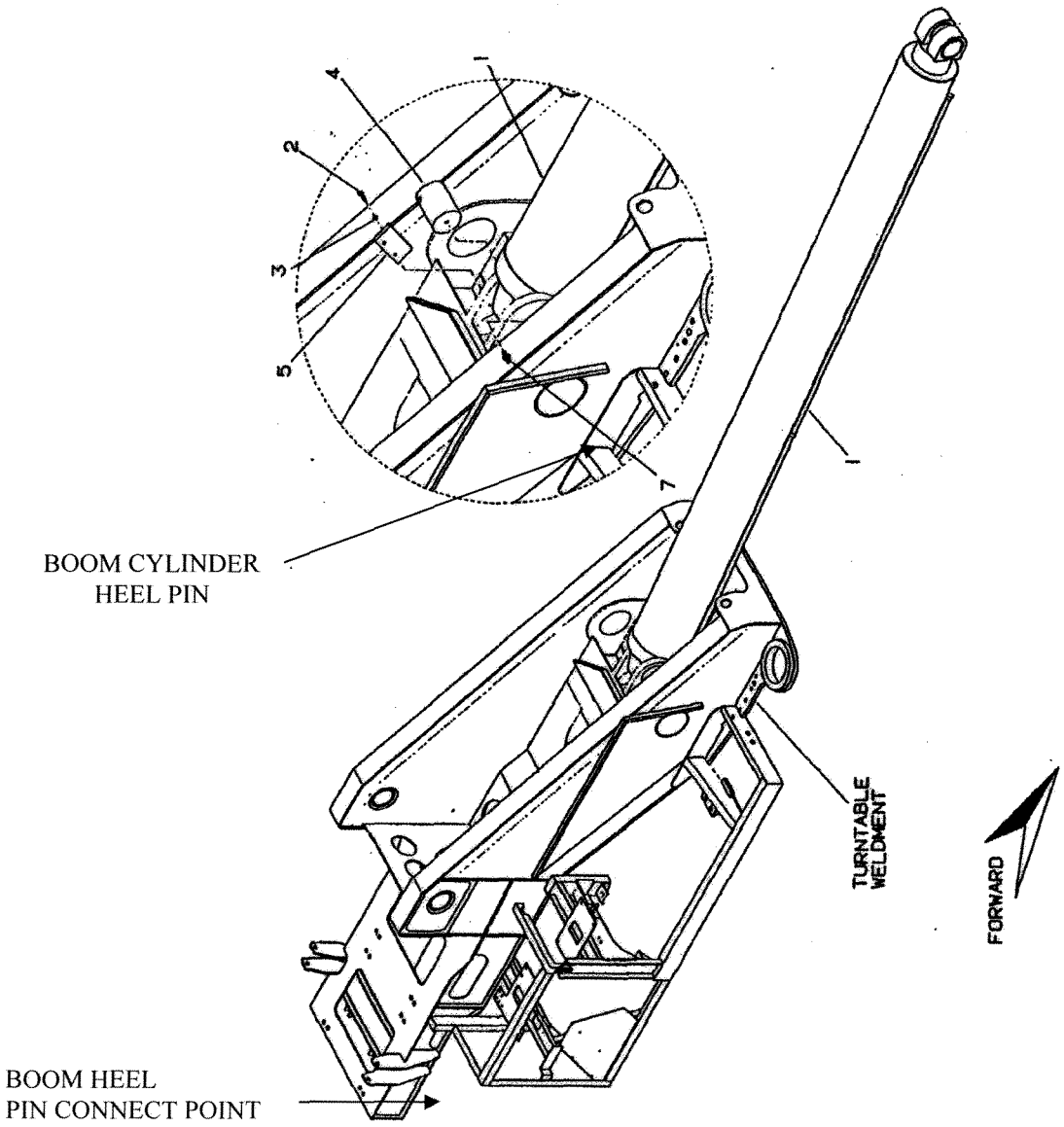

ILLUSTRATION BOOM LIFT 2.0

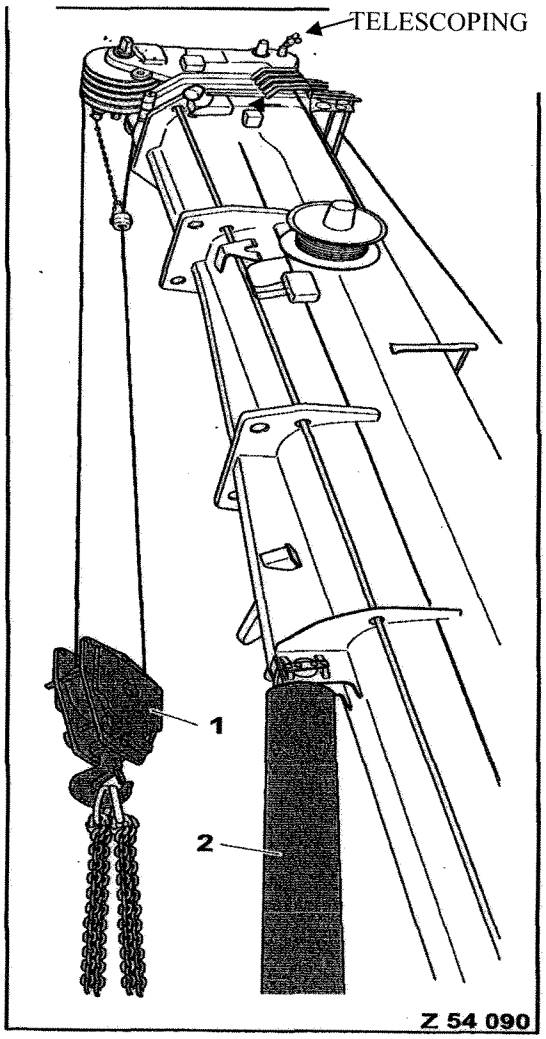

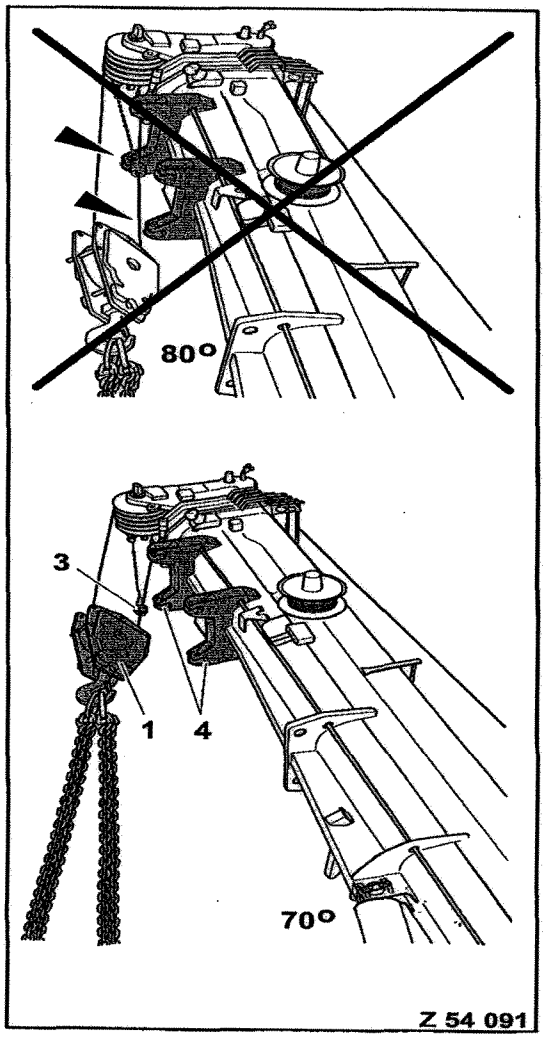

ILLUSTRATION BOOM LIFT 3.0

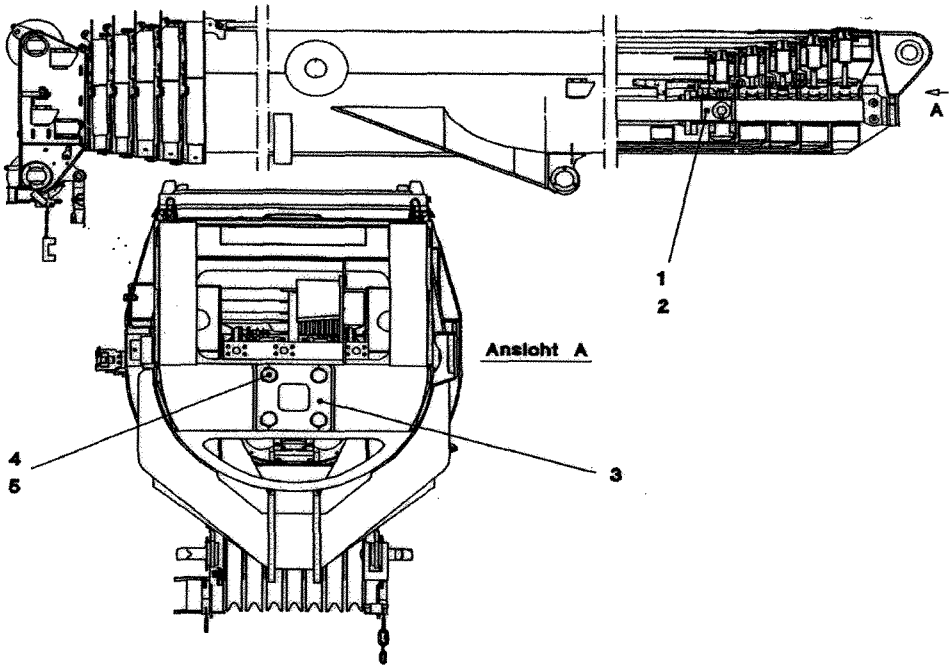

Pos.	Artikel Item Article	Menge Quantity Quantite	Bezeichnung Description Description		Serie
1	51 23 693 08	1	TELESKOPZYLINDER SPF-981907608-5	TELESCOPING RAM	
2	92 99 583 08	1	ANBAUTEILE ZYLINDER --> 3 300 80 92 99 583 08	ADD-ON PARTS RAM	
3	97 11 164 08	1	BLECH 6X300X300 S960QL	PLATE	
4	42 15 012 08	4	SCHEIBE 37 DIN 6916 C45	DISK	
5	40 69 050 08	4	SCHRAUBE M36X3X160 DIN 960 10.9	BOLT	

24.5.2002 026825	LTM 1250/1 Werknr. 070502	498
LIEBHERR	AUSSCHUBMECHANIK MECHANICAL EXTENSION SYSTEM	3 300 91 04 075 08

OUTRIGGER GROUP

TABLE OF CONTENT

ITEM DESCRIPTION 54
INSPECTION AND ANALYSIS - CYLINDER ASSEMBLY 55
INSPECTION AND ANALYSIS - OUTRIGGER BEAM ASSEMBLY 56
ILLUSTRATION OUTRIGGER 1.0 57
ILLUSTRATION OUTRIGGER 2.0 58
ILLUSTRATION OUTRIGGER 3.0 59

ITEM DESCRIPTION

OUTRIGGERS

The outrigger system uses two stage horizontal beams and vertical jacks to level the crane and stabilize the crane by increasing the tipping axis for all quadrant of operation. The outrigger system also provides a means to limit the ground pressure at each tipping axis.

The outrigger system on this crane is hydraulically powered.

INSPECTION AND ANALYSIS - CYLINDER ASSEMBLY

The cylinder assembly is the vertical jacking portion of the Outrigger System. It provides the operator with the means to level and therefore stabilize the crane.

If there is a total structural failure of the cylinder assembly, loss of load would occur.

The inspection should consist of a visual examination of the vertical jacking cylinders for defects such as leak down. Outriggers employ a holding valve to prevent the jacks from leaking, however if the valve should become contaminated the valve could slowly leak down possibly causing a tipping condition and loss of load. Jacks should be centered and pin to the outrigger pads. Insure that all pads are supported over 100 % of the pad area or span loading could occur causing the pads to fail at 50% capacity.

A visual inspection of the cylinder assembly shall be performed during the pre-lift meeting by the operator, lift coordinator or designated N.S.I. staff.

4-8-09

INSPECTION AND ANALYSIS - OUTRIGGER BEAM ASSEMBLY

The beam assembly is hydraulically powered and extends out away from the crane carrier. This provides greater stability while lifting loads.

If there is a total failure in the beam assembly loss of load will occur.

The inspection should consist of insuring that there are no structural defects to the beams such as cracked welds, bending, or twisting of the beams. Close attention should be paid to the beam housing for diagonal cracks due to structural overloading.

A visual inspection of the outrigger beam assembly shall be performed during the pre-lift meeting by the operator, lift coordinator or designated N.S.I. staff.

4-8-09

ILLUSTRATION OUTRIGGER 1.0

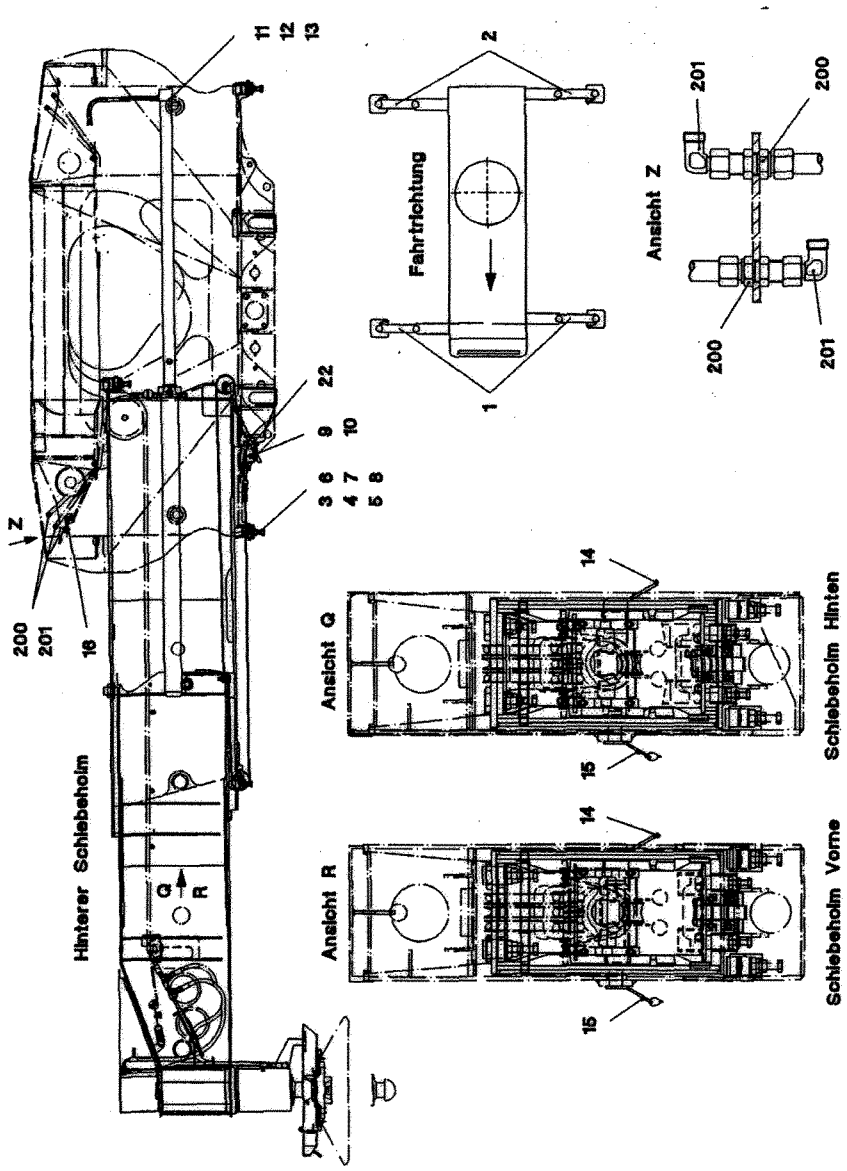

24.5.2002 022275	LTM 1250/1 Werknr. 070502	69
LIEBHERR	SCHIEBEHOLM M.LAGERUNG SLIDING BEAM WITH BEARING	1 632 91 45 993 08

ILLUSTRATION OUTRIGGER 2.0

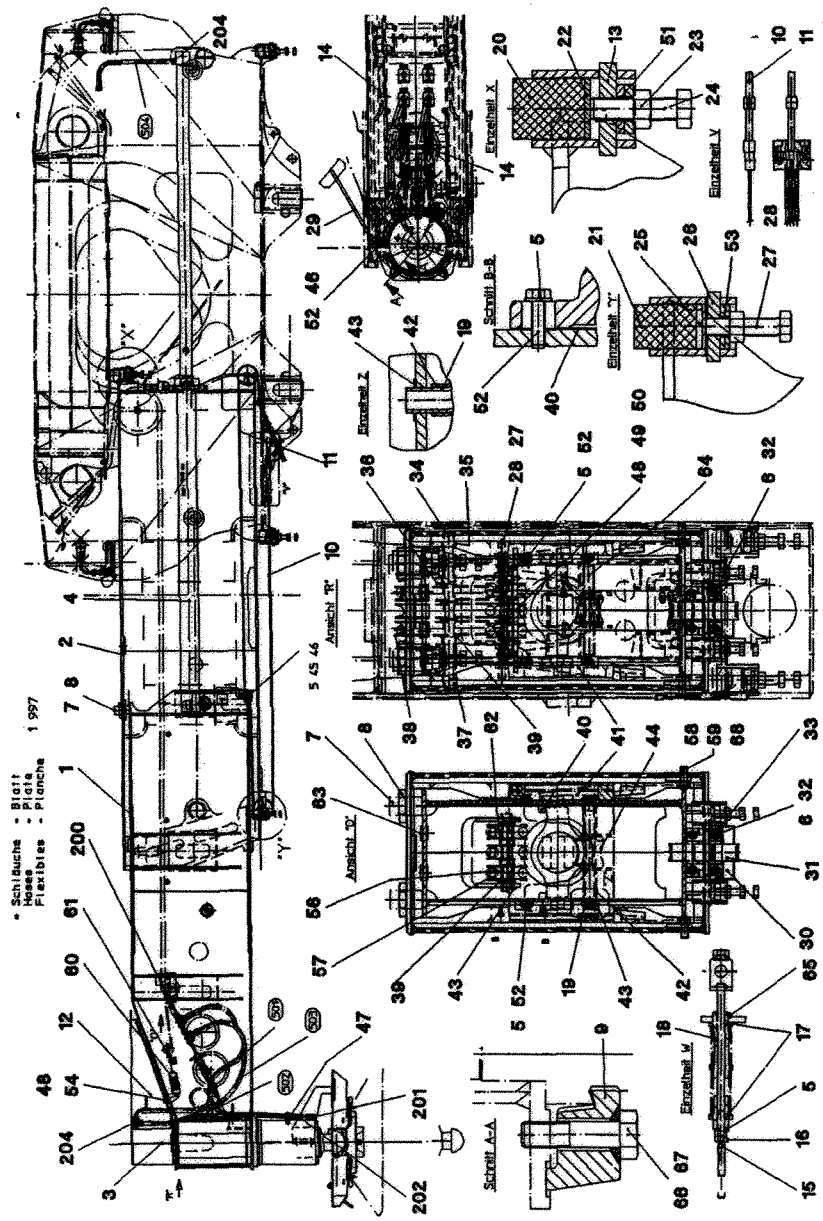

24.5.2002 021194	LTM 1250/1 Werknr. 070502 6	71
LIEBHERR	SCHIEBEHOLM VORM.VORN SLIDING BEAM FRONT, PRE-ASSEMB	1 632 053 92 46 885 08

ILLUSTRATION OUTRIGGER 3.0

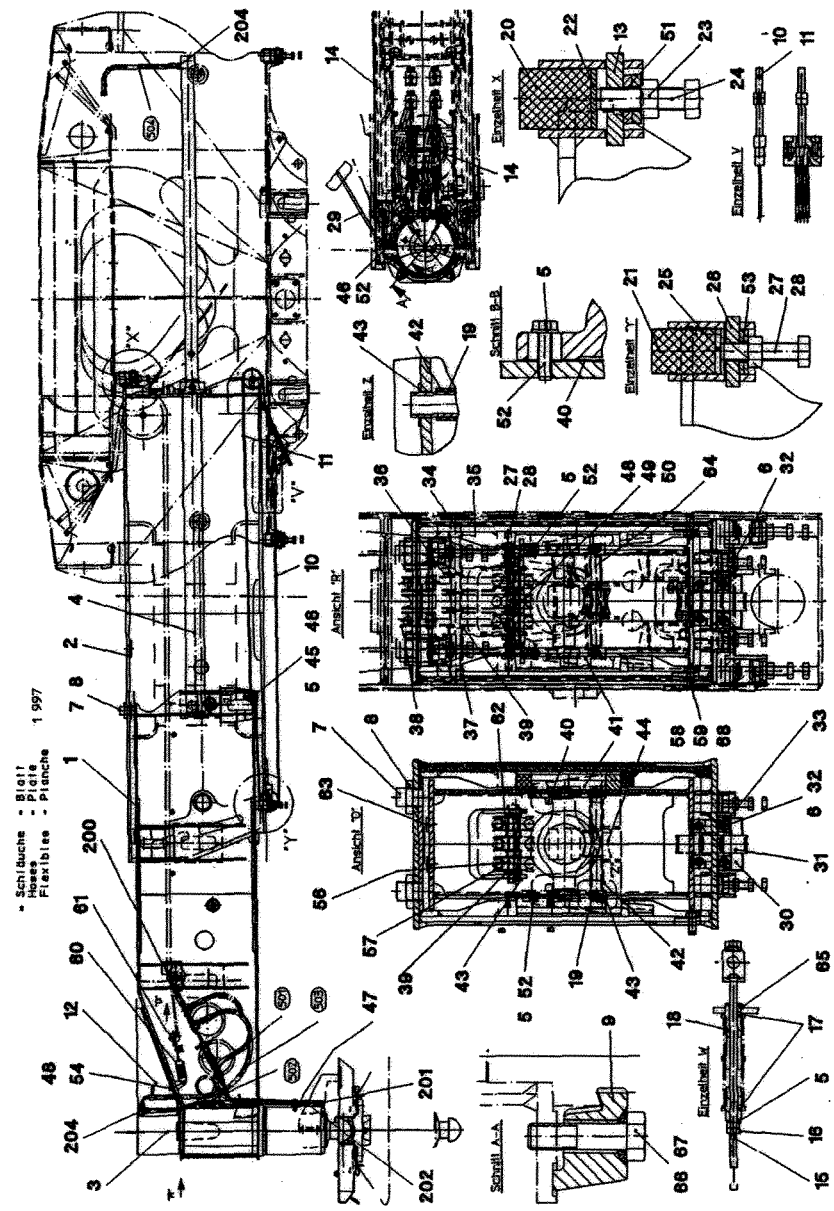

24.5.2002 021198	LTM 1250/1 Werknr. 070502	74
LIEBHERR	SCHIEBEHOLM VORM.HI. SLIDING BEAM REAR, PRE-ASSEMBL	1 632 054 92 47 011 08

ENGINE GROUP

TABLE OF CONTENT

ITEM DESCRIPTION 61
SPECIFICATIONS 62
ILLUSTRATION ENGINE 001 63

ITEM DESCRIPTION

ENGINE

Hydraulic Pressure and Electrical Power are provided through hydraulic pumps and electrical generators which are driven by the cranes diesel engine.

Should total engine failure occur all action will be stopped and the load will remain stationary until engine power is restored?

No loss of load will occur should engine power be lost.

SPECIFICATIONS

MANUFACTURER:

WERKNR

TYPE:

DIESEL

INTERNAL COMBUSTION

ILLUSTRATION ENGINE 001

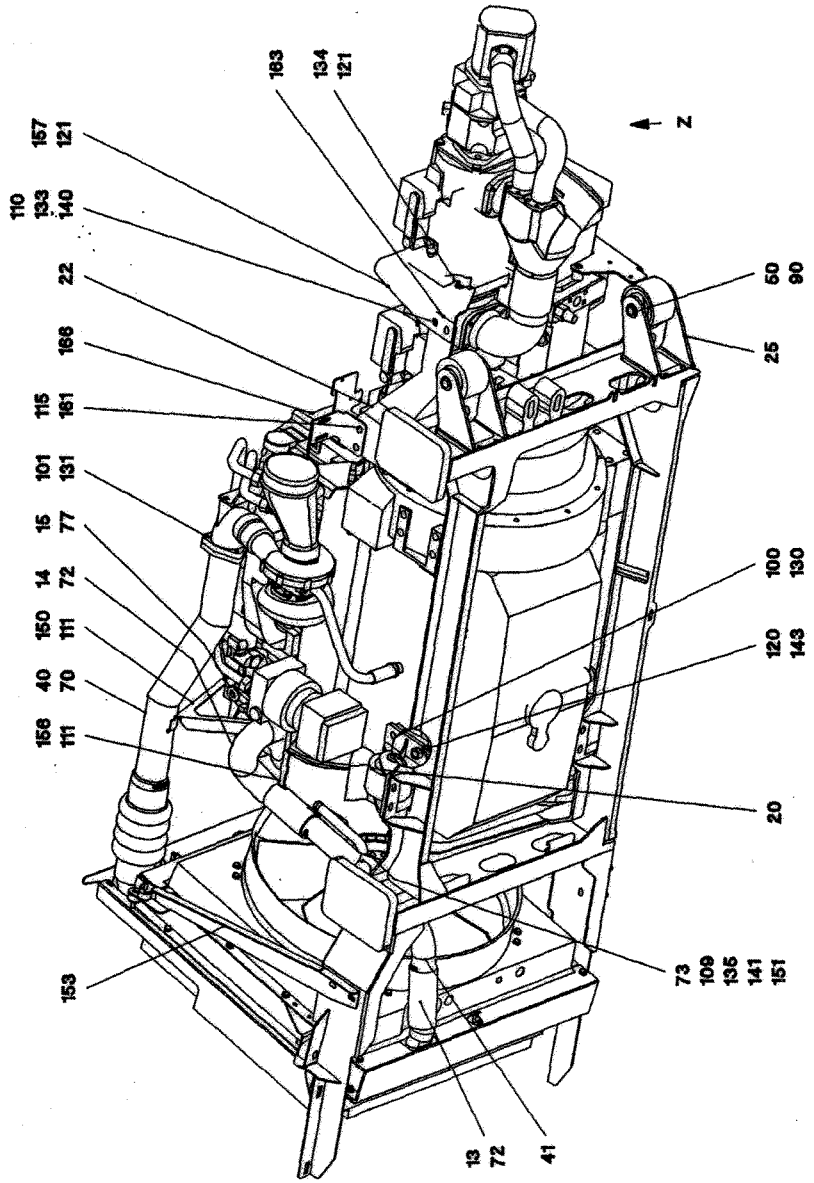

24.5.2002 025293	LTM 1250/1 Werknr. 070502	240
LIEBHERR	ANTRIEBAGGREGAT VORM.	2 210 91 00 582 08

ELECTRICAL SYSTEM GROUP

TABLE OF CONTENT

ITEM DESCRIPTION 65

ITEM DESCRIPTION

ELECTRICAL SYSTEM

The Electrical System of the crane works in conjunction with the hydraulic system. Each action requires both hydraulic and electrical activation. No single item will cause loss of load.

If a particular electrical component should fail, that particular function would stop.