Failure Modes and Effects Analysis

For

5 ton Acco Wright Series 32
Electric Wire Rope Hoist

E-109-2

PREPARED BY: Phillip Ezzell, Crane Safety Associates of America, Inc. 03/30/2010

APPROVED BY:_____

A.V. HANAGUD, DEPUTY RECERT MANAGER Date

Crane Safety Associates of America, Inc.

FAILURE MODES EFFECT ANALYSIS

ACCO WRIGHT Product Series 32 Wire Rope Electric Hoist

BY: PHILLIP EZZELL

March 30th, 2010

Table of Contents

INTRODUCTION 5
SINGLE POINT FAILURE POINTS 6
MAIN COMPONENT: HOIST DRUM (FIGURE 4) 6
MAIN COMPONENT: GEAR BOX & MECHANICAL LOAD BRAKE (FIGURE 5) 6
MAIN COMPONENT: HOOK BLOCK (FIGURE 5) 6
MAIN COMPONENT: WIRE ROPE (FIGURE 6) 7
MAIN COMPONENT: TROLLY WHEELS & MOUNTING STUDS (FIGURE 12 & 13) 7
MAIN HOIST ASSEMBLY 8
HOIST MOTOR 8
HOIST MOTOR ~ FIGURE 1 9
HOIST DRUM 10
HOIST DRUM ~ FIGURE 2 11
MOTOR HOIST BRAKE 12
MOTOR HOIST BRAKE ~ FIGURE 3 13
GEAR CASE AND MECHANICAL LOAD BRAKE 14
GEAR CASE ~ FIGURE 4 15
GEAR CASE PARTS LIST ~ FIGURE 4A 15
HOOK BLOCK 17
BEARINGS, SPACERS AND SHEAVES 17
AXLE - THROUGH SHAFT 18
HEX NUT 18
HOOK 18
HOOK COMPONENTS ~ FIGURE 5 19
WIRE ROPE 20
WIRE ROPE INSPECTION 20
WIRE ROPE ~ FIGURE 6 21
HOIST LIMIT SWITCHES 32
HOIST LIMIT SWITCHES ~ FIGURE 7 33
HOIST LIMIT SWITCHES ~ FIGURE 8 34
FESTOON AND PENDENT CONTROL STATIONS 35
PENDENT CONTROL BOX ~ FIGURE 9 36
TROLLEY ASSEMBLY 37
TROLLEY MOTOR 37
TROLLEY MOTOR BRAKE 37
TROLLEY MOTOR BRAKE ASSEMBLY ~ FIGURE 10 38
TROLLEY GEAR BOX 39
TROLLY GEAR BOX ~ FIGURE 11 39
TROLLEY DRIVE WHEELS 40
TROLLEY DRIVE WHEELS ~ FIGURE 12 41
LOAD BAR ASSEMBLY ~ FIGURE 13 42
HOIST SPECIFICATIONS ~ FIGURE 14 43

INTRODUCTION

This analysis is based on drawings, blue prints, and parts and operations manuals. The hoist has been separated into two major components, the hoist and the trolley mechanizes. Much of the component descriptions will be reference to drawings or other illustrations. This manufacturer utilizes one common manual for several hoists models. Some illustrations may not be exact; however component function and location will be the same.

This analysis is based on subject equipment being properly assembled, tested and in the correct configuration as prescribed by the manufacturer.

SINGLE POINT FAILURE POINTS

MAIN COMPONENT: HOIST DRUM (FIGURE 4)

1. Part Name and Drawing: Wire rope attachment hardware and drum
2. Parts Function: A spooling surface to take up and play out wire rope during hoisting.
3. Failure Mode and Cause: Failure or loosening of the hardware used to secure the rope to the drum and failure of the drum due to damage or extreme wear.
4. Failure Effect on the System: Complete loss of service and possible load damage
5. Effect on Job or Personnel: May cause work stoppage and /or possible injury or death

MAIN COMPONENT: GEAR BOX & MECHANICAL LOAD BRAKE (FIGURE 5)

1. Part name and Drawing: Drum pinion shaft item 18, change gear item 40, drum shaft 12, and drum gear item 13 and key items 37 and 38.
2. Parts Function: Connects the gear train from the mechanical load brake to the hoist drum.
3. Failure Mode and Cause: Failure of above items will cause the hoist drum to free wheel with loss of load.
4. Failure Effect on System: Complete loss of service
5. Effect on Job or Personnel: May cause work stoppage and /or injury or death

MAIN COMPONENT: HOOK BLOCK (FIGURE 5)

1. Part Name and Drawing: sheaves, bearings, axle , hex nut, and hooks
2. Part Function: Provides a means to attach a load to the hoist and increases the number of wire rope reeving to increase hoisting strength and efficiency.
3. Failure Mode and Cause: Failure of above items will cause the wire rope to fail or become unattached.
4. Failure Effect on System: Complete loss of service
5. Effect on Job or Personnel: Work stoppage and possible injury or death

MAIN COMPONENT: WIRE ROPE (FIGURE 6)

1. Part Name and Drawing: Wire rope Figure 6
2. Part function: Provides the means and support for hoisting the load.
3. Failure Mode and Cause: Wire rope failure occurs due to damage to individual wires, strands, and cores. Sudden rope failure will occur with significant overload, and damage to certain components mentioned above.
4. Failure Effect on System: Complete loss of service
5. Effect on Job or personnel: Work stoppage and possible injury or death

MAIN COMPONENT: TROLLY WHEELS & MOUNTING STUDS (FIGURE 12 & 13)

1. Part Name and Drawing: Trolley wheels and mounting Studs Figure 12 and 13
2. Part Function: Connects trolley to and provides vertical support and vertical movement of the hoist.
3. Mode Failure and Cause: Load failure will occur if the trolley wheel space adjustments are incorrect. Adjusting space washers can be effected by damage to the trolley rail, or trolley wheel bearings.
4. Failure Effect on System: Loss of service
5. Effect on job and Personnel: Work stoppage and or possible injury or death.

MAIN HOIST ASSEMBLY

The function of the main hoist system is to raise and lower a load. Basically the system is a hoist drum driven by an electric motor through a gear case. A drum, usually grooved is used to take up and payout the wire rope used to raise and lower the load. This hoist has an electric motor brake to stop and hold the load. Located in the gear case is a mechanical load brake which provides lowering control and serves as a safety brake. The gear box has reduction gears to provide the necessary operational requirements of the hoist.

These components will be shown with a complete description of their function

HOIST MOTOR

This unit utilizes a 460 volt, two speeds, 1800 RPM, 5 horsepower motor which drives an attached gear box as described in figure 1 to raise and lower loads.

The hoist is not subject to a single point failure. Should the hoist motor fail the motor brake backed up by the mechanical load brake will prevent loss of load.

To insure proper operation an inspection by the operator should be conducted prior to the lift.

HOIST MOTOR ~ FIGURE 1

PARTS LIST – PRODUCT SERIES 32

HOIST MOTOR - PARALLEL MOUNTED HOIST

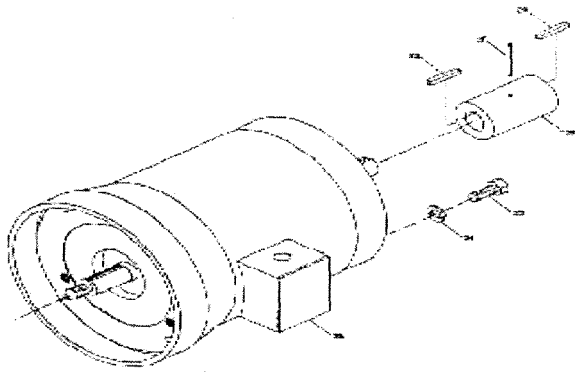

HOIST MOTOR PARTS

ITEM NO.	PART NO.	DESCRIPTION	QTY.
23	35-8-2CC	Bolt, Hex Head	4
24	17-8C	Lockwasher	4
25	(b)	Hoist Motor	1
26	69708	Coupling	1
27	PA5486	Roll Pin	1
28	70879	Key (a)	1
29	71057	Key	1

No Recommended Spare Parts

NOTES:

(a) Included with hoist motor. Also available individually.

(b) Select standard hoist motor by part number according to motor specifications as follows:

PART NO.	VOLTAGE	HP	RPM	SPEED	FRAME
69777-01	208	3	1800	Single	184TC
69777-02	230/460				
69777-03	575				
69777-04	208	5			
69777-05	230/460				
69777-06	575				
69778-01	208	3/1	1800/600	Two	
69778-02	230				
69778-03	460				
69778-04	575				
69778-05	208	5 / 1-2/3			
69778-06	230				
69778-07	460				
69778-08	575				

For other specified special motors, refer to additional information pages supplied with manual.

Page 8

HOIST DRUM

The hoist drum is parallel to the monorail and double grooved allowing the wire rope to be taken up in order to raise the load. The drum is mounted to the frame unit as seen in figure 2.

The hoist drum if properly classified has a relatively long life and is rarely subject to failure. However failure of the drum could occur due to extreme wear. A worn or damaged drum could lead to wire rope failure and loss of load. Also, loss of load could occur with the failure of the drum drive and ring gear or failure of the wire rope end attachment hardware at each end of the drum.

The drum should be inspected by the operator, lift coordinator or other lift team member during the pre lift meeting. The hoist should not be used unless a minimum of two wire rope wraps remain on the drum while the hook block is in its lowest position. The drum should not be used if the surface or the grooves are worn beyond 25% of the nominal diameter of the wire rope. The inspector should look for signs of movement or wobble of the drum, oil leaks or other signs of leaking seals. Leaking seals can contaminate the motor brake chamber and cause loss of motor brake function.

End attachments should be checked for proper fit of lugs or tightness of bolts and clips depending on attachment type.

HOIST DRUM ~ FIGURE 2

PARTS LIST – PRODUCT SERIES 32

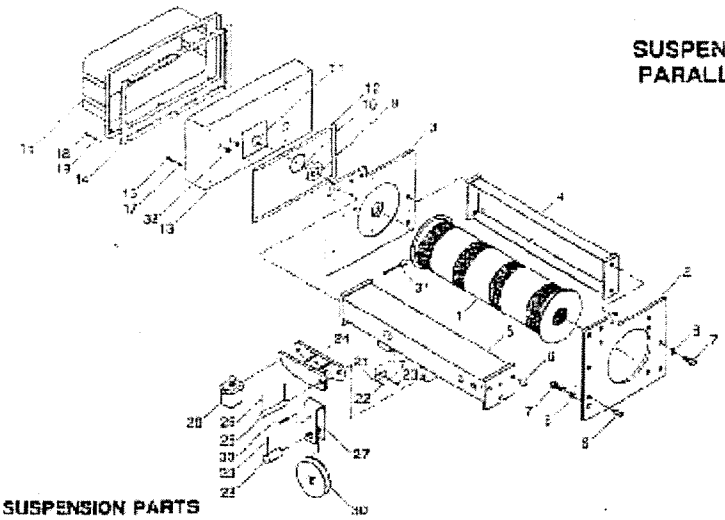

SUSPENSION – 2PD REEVING PARALLEL MOUNTED HOIST

2PD SUSPENSION PARTS

ITEM NO.	DESCRIPTION	QTY.	25 FT. LIFT PART NO.	26 FT. LIFT PART NO.	36 FT. LIFT PART NO.	60 FT. LIFT PART NO.	35 FT. LIFT PART NO.
1	Drum, Double Grooving	1	69726-04	69726-05	69726-06	69726-07	69726-08
2	End Plate, Gear End	1	69720	69720	69720	69720	69720
3	End Plate, Control End	1	69721	69721	69721	69721	69721
4	Side Frame	1	69842-04	69842-05	69842-06	69842-07	69842-08
5	Frame Unit (c)	1	69718-04	69718-05	69718-06	69744-07	69744-08 (b)
6	Dowel Pin	6	PA7394	PA7394	PA7394	PA7394	PA7394
7	Hex Head Bolt	12	35-10-20C	35-10-20C	35-10-20C	35-10-20C	35-10-20C
8	Lockwasher	12	17-10C	17-10C	17-10C	17-10C	17-10C
9	Bearing	1	PA7393	PA7393	PA7393	PA7393	PA7393
10	Retaining Ring	1	PA6940	PA6940	PA6940	PA6940	PA6940
11	Retaining Ring	1	PA6813	PA6813	PA6813	PA6813	PA6813
12	Gusset	1	69774	69774	69774	69774	69774
13	Enclosure	1	69773	69773	69773	69773	69773
14	Gasket	1	58531	58531	58531	58531	58531
15	Cover	1	52823	52823	52823	52823	52823
16	Hex Head Bolt	6	35-4-8C	35-4-8C	35-4-8C	35-4-8C	35-4-8C
17	Lockwasher	7	17-4C	17-4C	17-4C	17-4C	17-4C
18	Captive Screw	6	58597	58597	58597	58597	58597
19	Retaining Ring	6	PA6634	PA6634	PA6634	PA6634	PA6634
20	Overload Cut-off 2 & 3 Ton	1	39169-04	39169-04	39169-04	39169-04	39169-04
20	Overload Cut-off - 5 Ton	1	39170-04	39170-04	39170-04	39170-04	39170-04
21	Keeper Plate	1	53219	53219	53219	53219	53219
22	Roll Pin	1	PA4607	PA4607	PA4607	PA4607	PA4607
23	Hex Head Bolt	1	35-4-8C	35-4-8C	35-4-8C	35-4-8C	35-4-8C
24	Sheave Mounting Unit	1	69753	69753	69753	69753	69753
25	Pin	1	69717	69717	69717	69717	69717
26	Cotter Pin	2	PA1364	PA1364	PA1364	PA1364	PA1364
27	Sheave Hanger	1	69731	69731	69731	69731	69731
28	Pin	1	69747	69747	69747	69747	69747
29	Cotter Pin	2	PA1771	PA1771	PA1771	PA1771	PA1771
30	Polyamide Equalizing Sheave	1	69746	69746	69746	69746	69746
30	Steel Equalizing Sheave	1	69775	69775	69775	69775	69775
31	Wire Rope Assembly (a)	1 ▲	69728-04	69728-05	69728-06	69728-07	69728-08
32	Grommet	2	PA7409	PA7409	PA7409	PA7409	PA7409
33	Pin	1	PA5342	PA5342	PA5342	PA5342	PA5342

▲ Recommended Spare Parts

NOTE: (a) Part numbers shown for Item 31, Wire Rope Assembly, are for standard hoists using 3/8 dia. 6x37 XIP wire rope. For special hoists using other size or type wire rope, refer to the wire rope part number listed in additional pages included with this manual; or contact Acco Chain & Lifting Products or the distributor of the hoist.

(b) For deck-mounted, use Part No. 70130.

(c) Use of Swivel Trolleys requires different Frame Unit. See page 37.

Page 11

MOTOR HOIST BRAKE

Description: This hoist is equipped with an electric disc motor hoist brake. The brake is spring set and magnetically released. When power is applied a circuit closes and applies power to both the motor figure 3 and the brake coil (item 10). The energized brake coil pulls armature compression springs (item 8) releasing the brake. When power is disconnected or the control button is released, the circuit to the motor and brake coil opens allowing the springs to set the brake.

The hoist motor brake is not a single point failure item. Should the motor brake fail, the mechanical load brake will prevent loss of load. Should an electrical failure occur the motor brake will be applied. The crane operator, the lift coordinator, or other lift team member should inspect for proper operation prior to the lift. The periodic inspection should include a visual inspection for wear of 3\16 inch or more.

MOTOR HOIST BRAKE ~ FIGURE 3

PARTS LIST – PRODUCT SERIES 32

HOIST MOTOR BRAKE ASSEMBLY

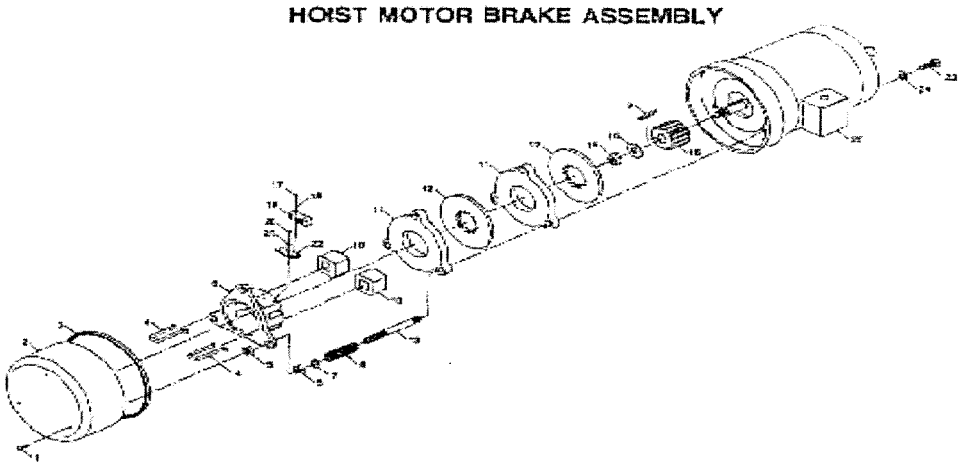

HOIST MOTOR BRAKE PARTS

ITEM NO.	DESCRIPTION	QTY	18 LB FT TORQUE (a) 69757-01 (b) (c) PART NO.	33 LB FT TORQUE (a) 69757-02 (b) (c) PART NO.
1	Screw, LOC-WELL (d)	3▲	PA7323	PA7323
2	Cover	1	69743	69743
3	Gasket	2.5 ft ▲	PA7110	PA7110
4	Coil Strap	2	51451	51451
5	Nut, cam	6	24-10	24-10
6	Magnet	1	51445	51445
7	Washer	3	PA2714	PA2714
8	Spring	3	PA7386 (e)	PA6077 (e)
9	Key (g)	1	70879	70879
10	Coil	2	51452	51452
11	Armature Plate	2	51441	51441
12	Lining Disc	2▲	51437	51437
13	Stud	3	69755	69756
14	Locknut	1▲	PA2434	PA2434
15	Washer	1	15-10-0	15-10-0
16	Hub	1	69754	69754
17	Screw	2	3-06-14	3-06-14
18	Lockwasher	2	19-06	19-06
19	Switch	1	PA6079	PA6079
20	Screw	2	3-08-4	3-08-4
21	Lockwasher	2	19-08C	19-08C
22	Mounting Bracket	1	PA6080	PA6080
23	Bolt	4	(f)	(f)
24	Lockwasher	4	(f)	(f)
25	Motor	1	(f)	(f)

▲ Recommended Spare Parts

NOTES:

(a) On standard single-speed and two-speed hoists, 18 lb. ft. torque brakes are used with 3 HP motors, and 33 lb. ft. torque brakes are used with 5 HP motors.

(b) Numbers in heading of chart are Hoist Motor Brake Assembly numbers.

(c) This brake is not used on hoists in Hazardous (Classified) locations as identified by the National Electrical Code.

(d) Screw with self-locking feature must be utilized. Substitutes are not permissible.

(e) Springs are color coded. Spring (PA7386) for 18 lb. ft. torque brake is blue color. Spring (PA6077) for 33 lb ft. torque brake is cadmium color.

(f) For part numbers, refer to pages 8 and 9.

(g) Included with hoist motor. Also available individually.

Page 5

GEAR CASE AND MECHANICAL LOAD BRAKE

Description: The function of the gear case is to transmit motor torque. As illustrated in figure 4, the gear case consist of a number of different size pinions and gears, helical or spur, housed in a gear case and meshed with each to provide a continuous transmission of power from the input shaft to the output shaft. Gears are pressed and fitted onto a keyed shaft, and supported in the gear case by antifriction bearings enclosed in a bearing capsule. Gear 13, gear pinion shaft 12, and shaft key are single point failure points. Should any one of these three items fail the load would be lost. The gear itself has a very low probability of failure, the most likely of the three while unlikely will be the key and or the pinion shaft key way. Some hoists are equipped with double key ways and keys to provide extra security.

The function of the mechanical load brake is to hold the load after hoisting, and to control the speed of the load when lowering. The mechanical load brake consist of a threaded shaft (item 28) and a fixed flange, a motor gear (item 30) with a threaded bore, a ratchet (item 27) with friction linings riveted to each side, and a spring controlled pawl (item 33) mounted in the gear case. During the raising cycle the motor gear is driven clockwise causing the motor gear to compress the ratchet between itself and the fixed flange. The spring controlled pawls are thrown away from the bracket, therefore no braking action occurs. Gears, keys, and pinions associated with the portion of the gear box are not single point failure locations. Failure of any would activate the motor brake.

During the lowering cycle the motor gear is driven counterclockwise attempting to release the ratchet simultaneously, the load on the hook drives the fixed flange counterclockwise, attempting to close the brake. The pawl engages the ratchet and forces the ratchet to slip between the motor gear and flange, thereby creating braking torque.

The mechanical load brake is not a single point failure risk. It is always backed up by the magnetic motor brake. Should the mechanical brake fail the operator could stop the hoisting function allowing the motor brake to stop and hold the load.

It is recommended that the mechanical load brake be inspected during the hoist periodic inspection. Prior to the lift the operator should check for proper operation by insuring that there is no chattering of the brake, the gear case oil is clean and at the proper level.

GEAR CASE ~ FIGURE 4

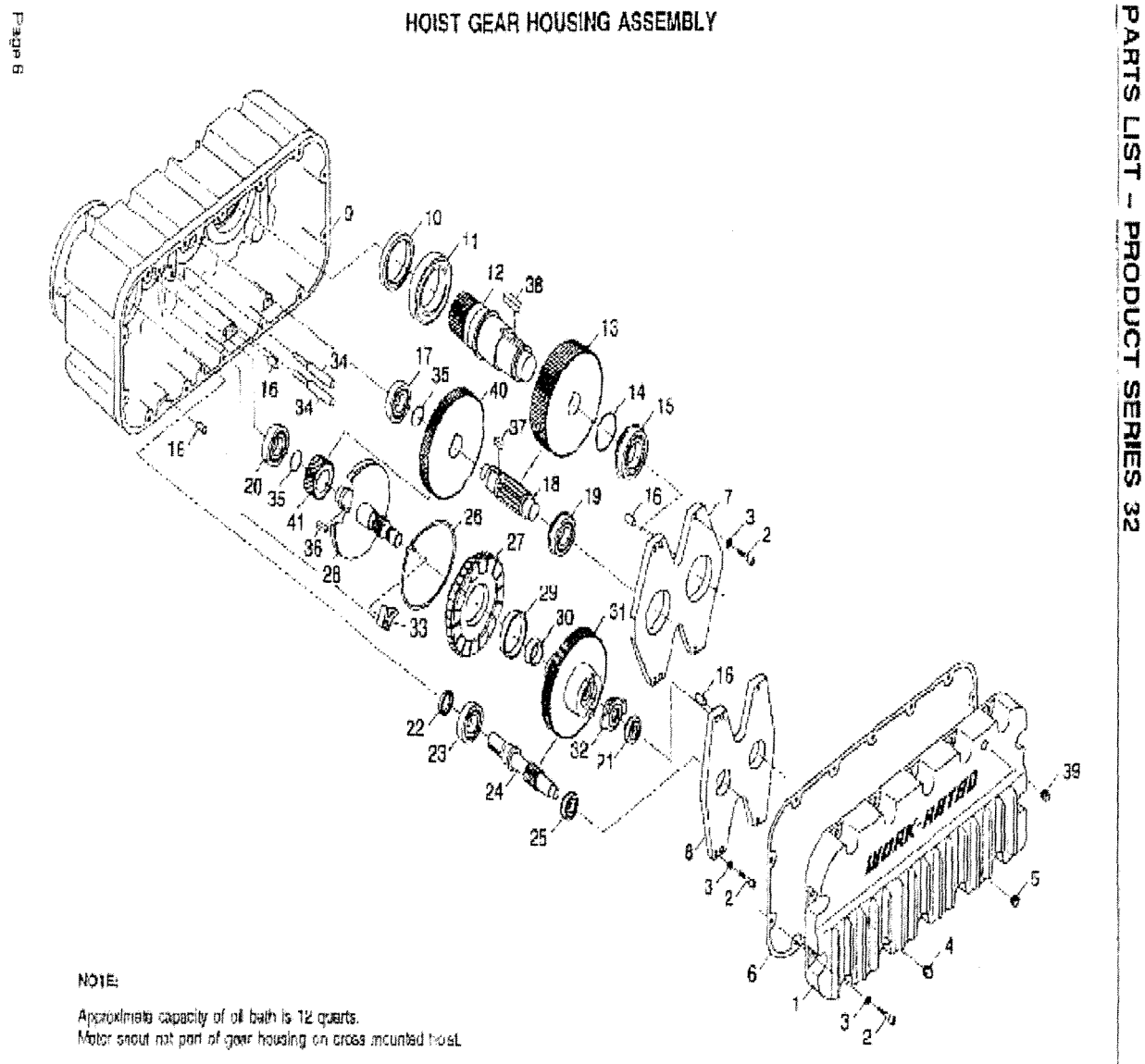

GEAR CASE PARTS LIST ~ FIGURE 4A

PARTS LIST - PRODUCT SERIES 32

HOIST GEAR HOUSING ASSEMBLY

HOIST GEAR HOUSING PARTS

ITEM NO.	PART NUMBER	DESCRIPTION	QTY/ ASSY
1	69707	Gear Housing Cover	1
2	1-6-20	Bolt, 3/8-16 x 1-1/4	22
3	17-6C	Lockwasher, 3/8	22
4	PA7380	Oil Level Plug	1
5	PA798	Pipe Plug	1
6▲	69713	Gasket	1
7	69709	Output Spider	1
8	69710	Input Spider	1
9	(a)	Gear Housing	1
10▲	PA7390	Oil Seal	1
11	PA7389	Bearing	1
12	69733	Drum Shaft	1
13	69736	Drum Gear	1
14	PA5856	Retaining Pin	1
15	PA5870	Bearing	1
16	PA4846	Dowel Pin	4
17	PA6278	Bearing	1
18	69735	Drum Pinion Shaft	1
19	PA7388	Bearing	1
20	PA6563	Bearing	1
21	PA4847	Bearing	1

ITEM NO.	PART NUMBER	DESCRIPTION	QTY/ ASSY
22▲	PA6567	Oil Seal	1
23	PA2389	Bearing	1
24	(b)	Motor Pinion Shaft	1
25	PA7387	Bearing	1
26	55051	Pawl Spring	1
27	54982	Ratchet Unit	1
28	55054	Brake Shaft Unit	1
29	PA6569	Needle Bearing, Outer	1
30	PA6568	Needle Bearing, Inner	1
31	54979	Brake Gear	1
32	54984	Check Sleeve	1
33	40493	Pawl	1
34	69745	Pawl Pin	2
35	PA4053	Retaining Ring	2
36	PA6294	Key	1
37	PA7391	Key	1
38	PA7392	Key	1
39	PA7381	Vent Plug	1
40	(c)	Change Gear	1
41	(c)	Change Pinion	1

▲ Recommended Spare Parts

NOTE:

(a) Gear Housing part numbers:
Parallel Mounted Hoist ———— 69712
Cross Mounted Hoist ———— 70777

(b) Motor Pinion Shaft part numbers:
Parallel Mounted Hoist ———— 69734
Cross Mounted Hoist ———— 70778

(c) Gearing varies with the speed of the hoist. Three gear sets are available, each identified by Gear Housing Assembly No. 69750 with dash number suffix (-01 thru -03 for parallel mounted hoist and -11 thru -13 for cross mounted hoist). Select proper dash number by counting and comparing number of teeth in gear and pinion.

The parts of this assembly which affect the speed of the hoist are Items 40 and 41.

GEAR HOUSING ASSEMBLY		69750-01	69750-02	69750-03	PARALLEL MOUNTED HOIST
		69750-11	69750-12	69750-13	CROSS MOUNTED HOIST
LIFTING SPEED		15 FPM	22 FPM	30 FPM	
ITEM NO.	DESCRIPTION	PART NO.	PART NO.	PART NO.	
40	Gear	69737 *(83 teeth)*	69738 *(76 teeth)*	69739 *(69 teeth)*	
41	Pinion	69742 *(29 teeth)*	69741 *(36 teeth)*	69740 *(43 teeth)*	

HOOK BLOCK

Hook blocks are used to increase hoisting efficiency on crane and hoisting systems by means of increasing the number of running wire ropes through encased sheaves. Attached to the encasement is a single barb hook. The hook provides a means to attach loads usually using suspension gear such as slings.

This hoist comes with a variety of reeving options that can be used based on the weight of the loads to be hoisted and the hoisting speeds desired. The description given for this analysis and inspection will apply to the PD2 option.

The hook block is a 2PD reeve which stands for two parts double or a total of 4 parts wire rope supporting the load. The wire rope passes through the two block sheaves from opposite sides of the hoist drum after passing through the equalizer sheave figure 2. Rope is attached to the drum with pressed lugs or bolted clips. The equalizer sheave and pins are single point failure points. The lift coordinator or other lift team member should inspect for worn sheave surfaces, defective bearings and missing pins.

BEARINGS, SPACERS AND SHEAVES

Hoist Block Sheaves figure 5, operate within the block, and with the assistance of spacers' (item 8). Spacers separate steel sheaves in order to provide a necessary even and balanced load. The hook block is supported by wire rope secured on both ends of the hoist drum and balanced by the middle of the wire rope system threaded or reeved through the steel equalizing sheave figure 2. Bearings, (item 3) allow sheaves to rotate with a minimum of friction, lateral movement, or wobble. Defective sheaves, bearings, and spacers may cause the sheaves to freeze or wear in the sheave grooves may cause eventual failure of the wire with loss of load.

A visual inspection should be conducted by the crane operator, lift coordinator, or other lift team members during the pre-lift meeting on the job site.

The inspection shall consist of insuring that all sheaves are operating properly and no damage or excessive wear is present. Sheaves shall support the wire rope from 135 to 150 degrees of the wire rope circumference. Sheave grooves shall be smooth and not worn, flanges shall not be broken and sheave guards shall be in place and undamaged. The equalizer sheave shall be inspected for wear and for wire rope fatigue in the bend.

AXLE - THROUGH SHAFT

Hook block sheaves, figure 5, (item 3) are held in place by a shaft (item 6) which passes through the sheaves and attaches to the inner plates or frame (item 5) of the block housing. If the axel shaft breaks the sheaves and the wire rope may fail or detach causing loss of load.

The hook block should be inspected by the crane operator or mechanic in the absence of a recent NDT report or certification. The inspection by the crane operator, the coordinator, or other lift team members should be for visual signs of excessive sheave wobble or binding.

HEX NUT

The hex or shank nut figure 5 (item 11) holds the hook in the block assembly. Should the hex nut completely fail, the hook would separate from the hook block, resulting in loss of load.

A visual inspection of the hex nut shall be performed by the crane operator, lift coordinator, or other team member during the pre-lift meeting at the job site. Inspection should insure there are no distortions or cracks on the nut, and the nut has proper tightness. There should be no signs of thrush washer wear which would be indicated by a loose or wobbly hook or a frozen hook.

HOOK

The hook is the load bearing point of the hook block, figure 5 (item 1). Structural failure of the hook will result in loss of load.

The hook should undergo a visual inspection during the pre-lift meeting by the crane operator, lift coordinator or other members on the lift team. The inspection can be performed on site and does not require disassembly.

The hook inspection should consist of looking for hairline cracks, spreading of the hook by more than 15% of the original throat opening, loss of 10% or more of the original hook material, twisting, and evidence of heat damage such as welding. An annual NDT certification of the hook, nut is recommended and should be presented to the lift co-coordinator.

HOOK COMPONENTS ~ FIGURE 5

PARTS LIST – PRODUCT SERIES 32

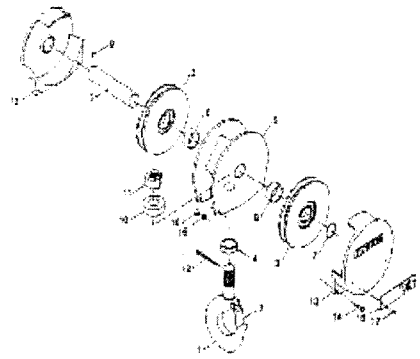

LOAD BLOCK - 2PD REEVING
3/8" ROPE DIAMETER

Load Block Assembly 69554-01 - Steel Spring Latch Type Hook, Polyamide Sheave
Load Block Assembly 69554-02 - Bullard Swivel Latch Type Hook, Polamide Sheave
Load Block Assembly 69554-03 - Bronze Spring Latch Type Hook, Polyamide Sheave
Load Block Assembly 69554-04 - Steel Spring Latch Type Hook, Steel Sheave
Load Block Assembly 69554-05 - Bullard Swivel Latch Type Hook, Steel Sheave
Load Block Assembly 69554-06 - Bronze Spring Latch Type Hook, Steel Sheave

LOAD BLOCK PARTS

ITEM NO.	DESCRIPTION	QTY	STEEL SPRING LATCH TYPE HOOK	BULLARD SWIVEL LATCH TYPE HOOK	BRONZE SPRING LATCH TYPE HOOK
1	Hook without hole in tip	1	41732 (a)	41794	42643 (a)
1	Hook with hole in tip	1	70892 (a)	N/A	70800 (a)
2	Latch for hook without hole in tip	1	PA5325 (a)	N/A	PA5327 (a)
2	Latch for hook with hole in tip	1	PA7582 (a)	N/A	PA7583 (a)
3	Polyamide Sheave with Bearing	2	69561	69561	69561
3	Steel Sheave with Bearing	2	69562	69562	69562
4	Spacer	1	N/A	41797	N/A
5	Frame	1	69586	69586	69586
6	Axle	1	69587	69587	69587
7	Retaining Ring	1	PA7349	PA7349	PA7349
8	Spacer	2	69563	69563	69563
9	Roll Pin	1	PA4607	PA4607	PA4607
10	Thrust Bearing	1	PA1082	PA1082	PA1082
11	Slotted Hex Nut	1	26-20	26-20	26-20
12	Cotter Pin	1	PA1771	PA1771	PA1771
13	Cover	2	69589	69589	69589
14	Hex Head Bolt	1	35-5-20	35-5-20	35-5-20
15	Lockwasher	4	17-5C	17-5C	17-5C
16	Hex Nut	4	22-5C	22-5C	22-5C
17	Drive Screw	4	PA893	PA893	PA893
18	Capacity Plate	2	(b)	(b)	(b)

No Recommended Spare Parts

NOTES:

(a) Current style Spring Latch Hooks are being phased out by Acco's supplier. The new style Spring Latch Hooks have a hole in the tip of the hook. This hole allows the addition of a cotter pin to prevent the latch from opening. Cotter pin is not supplied by Acco. New style hooks are interchangeable with old style hooks, but new style hooks have a thicker cross section. Latches are not interchangeable between the two style hooks. As soon as stock of current style hook is depleted, current style hook will no longer be available. Latches for current style hooks will continue to be available. When ordering, identify whether or not hook has a hole in the tip and select part numbers accordingly from the above chart.

(b) Capacity Plate part numbers:

1 Ton - 69683-010	1 tonne - 69683-1010
2 Ton - 69683-020	2 tonne - 69683-1020
3 Ton - 69683-030	3 tonne - 69683-1030
5 Ton - 69683-050	5 tonne - 69683-1050

Page 14

WIRE ROPE

The load line on this hoist is a 3\8 6x37 RRL IWRC XIPS designed specifically to be used as running wire rope. This means the rope is designed to travel through and around sheaves located within the hook block and the equalizer sheave attached to the hoist frame. The term 6x37 means the rope construction consist of 6 strands of 37 small wires.

The wire rope is designed to perform to the necessary bending, wear, and fatigue factors common in hoisting operations. It is made up of three main components; wires, strands, and a core rope usually an independent wire rope core or center. In order to meet U.S. standards the ropes must only be loaded to a fraction of the breaking strength or ultimate strength. Six and eight strand ropes used for overhead hoist shall work with a factor of safety of no less than 5:1 or 20% of breaking strength.

WIRE ROPE INSPECTION

Inspection and maintenance of wire rope is an ongoing process.

The load cable (wire rope) is constantly monitored for signs of fatigue, wear, broken wires, valley wire breaks, flat spots, kinks, broken strands, and bird caging.

The inspection minimum standard for wear is based on the diameter of the rope. A 3/8 inch wire rope shall be removed from service when it has lost 1/32 of its diameter. It shall also be removed when it has loss 1/3 of the diameter of the outside strand wires.

Six and eight strand ropes shall be removed when twelve randomly broken wires are present in one rope lay or four broken wires in one strand in a rope lay. A rope lay is the distance it takes for one rope strand to travel 360 degrees around the rope. See wire rope figure 6.

Failure of the load cable will result in loss of load.

Wire rope shall be inspection by the operator, lift coordinator, or designated lift team member during the pre-lift meeting.

WIRE ROPE ~ FIGURE 6

WIRE ROPE INSPECTION GUIDELINES

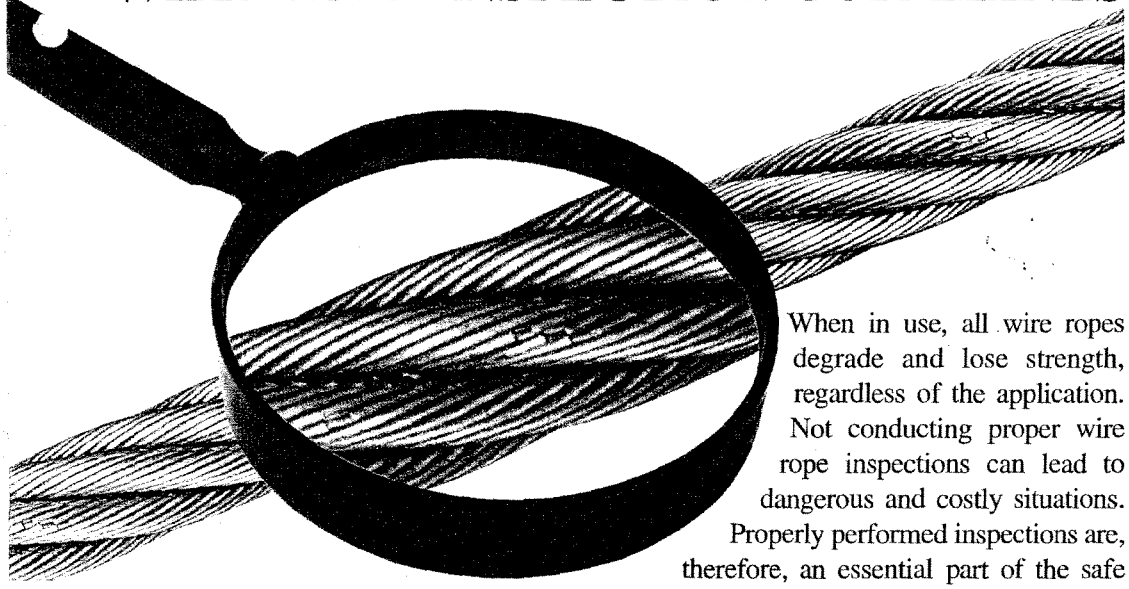

When in use, all wire ropes degrade and lose strength, regardless of the application. Not conducting proper wire rope inspections can lead to dangerous and costly situations. Properly performed inspections are, therefore, an essential part of the safe and efficient use of every wire rope.

This is precisely why industry safety standards developed and published by the Occupational Safety and Health Administration (OSHA), American National Standards Institute (ANSI), American Society of Mechanical Engineers (ASME) and various other industry and governmental organizations require frequent, periodic inspections with permanent records. The rope user is responsible for using the proper standard for inspection.

The following information will be a useful aid in planning and making an inspection program for any wire rope installation or usage.

HOW TO INSPECT

An inspection program is an integral part of every wire rope application and requires a specific schedule, trained and qualified inspectors, the criteria applicable to the usage, and permanent records.

There are also tools and techniques the inspector must have in order to evaluate a rope's condition, and the knowledge to determine if a rope can continue to perform the work required of the installation.

A basic understanding of how wire ropes and wire rope slings are designed and manufactured, and how they operate, is also useful. The inspector must be able to recognize specific evidence of damage and degradation in them.

REQUIREMENTS FOR INSPECTION

Inspection requires certain tools, such as a micrometer, calipers, steel tape measure, groove gauges and forms for recording data.

The specific criteria published in industry standards and governmental regulations are also necessary.

The inspector must also have access to the entire rope length and ability to see the rope's condition close-up.

Specific aspects of wire rope inspection are discussed on the following pages including diameter, broken wires, internal rope inspection, etc.

ACCESS FOR INSPECTION

There are two types of inspections, and access requirements are different for each. Daily, work shift, or frequent inspections may not require examining the entire length of a rope. These inspections are visual observations and are concerned with discovering gross damage and potential problems. Periodic inspections, where permanent records are normally mandated by OSHA, ASME and other regulatory agencies, require more stringent attention to specific details through the entire length of the rope - including diameter, lay measurement, broken wire counts, evidence of rope core failure, abuse and wear.

These Guidelines for wire rope inspection were developed by engineers and technicians who are members of the Wire Rope Technical Board. The WRTB is an association sponsored by U.S. manufacturers which produce 90% of the nation's wire rope supply: Bridon American Corporation (www.bridonamerican.com), Loos & Company, Inc. (www.loosco.com), Wire Rope Corporation of America (www.wrca.com), and Wirerope Works, Inc. (www.wireropeworks.com).

© 2006 The Wire Rope Techincal Board e-mail: wrtb@usa.net Printed in USA 10M

breaking in period. That is the measurement to be recorded as the initial diameter.

The actual rope diameter must be measured. This is defined as the diameter of the circumscribing circle. (i.e., its largest cross sectional dimension) To insure accuracy this measurement should be made with a wire rope caliper using the correct method (B) shown on the facing page. Special techniques and equipment must be employed for measuring ropes with an odd number of outer strands. (e.g., circumferential tapes, calipers with plates – see illustration on facing page).

Wear occurring at the crowns of outer wires is normal. Many standards state a rope must be removed from service when its actual diameter is reduced to 95% of the nominal diameter. The accompanying photos show examples of heavy normal wear on both regular and lang lay wire ropes.

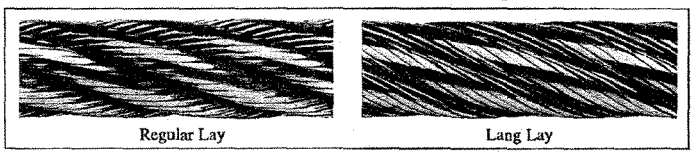

This picture simulates 6 x 25 fw construction wire ropes with surface wear (only) of 1/3 the outer wire diameter.

Plastic enhanced ropes (impregnated or filled) require careful measurements. It is essential to measure the metal, not plastic on the exterior of the rope. Exterior measurement cannot be used to determine diameter reductions of the wire rope in plastic coated (jacketed) ropes.

Rope core deterioration usually results in a reduction of the rope's diameter, making careful measurement important. Because the core provides less than 10% of the rope's strength (on standard six or eight strand IWRC ropes), that loss of strength may not be the primary concern. Deterioration of the core leads to increased stress and broken wires in the outer strands of the rope. These broken wires are usually valley breaks which can be more difficult to detect.

BROKEN WIRES

Broken wires are another primary indicator of rope degradation and remaining useful life. The accompanying table shows allowable wire breaks in typical installations. These broken wire removal criteria apply to wire rope operating on steel sheaves and drums. The user shall contact the sheave, drum, or equipment manufacturer or a qualified person for broken wire removal criteria for wire ropes operating on sheaves and drums made of material other than steel. If no other information is available, the standard broken wire removal criteria should be used. However, since the use of plastic sheaves may cause internal wire breakage, the inspector must pay particular attention to evidence of valley breaks or breaks against the core and corrosion in the rope valleys.

WHEN TO REPLACE WIRE ROPE-BASED ON NUMBER OF BROKEN WIRES*

		Running Ropes			Standing Ropes	
		No. Broken Wires in Standard Ropes		**No. Broken Wires In Rotation Resistant Ropes**	**No. Broken Wires**	
Standard	Name	In all strands in one Rope Lay	In one strand in one Rope Lay		In one Rope Lay	At End Connections
ASME/B30.2	Overhead & Gantry Cranes	12**	4	--	--	--
ASME/B30.4	Portal, Tower & Pillar Cranes	6**	3	4 in all strands in one rope lay or 2 in one strand in one rope lay	--	--
ASME/B30.5	Crawler, Locomotive & Truck Cranes	6**	3	2 in 6 rope diameters or 4 in 30 rope diameters	3	2
ASME/B30.6	Derricks	6**	3	--	3	2
ASME/B30.7	Base Mounted Drum Hoists	6**	3	--	3	2
ASME/B30.8	Floating Cranes & Derricks	6**	3	--	3	2
ASME/B30.16	Overhead Hoists	12**	4	2 in 6 rope diameters or 4 in 30 rope diameters	--	--
ANSI/A10.4	Personnel Hoists	6**	3	--	2**	2

*For rope operating on steel sheaves and drums. Contact the sheave, drum, equipment manufacturer or a qualified person for removal criteria for wire ropes operating on sheaves and drum made of material other than steel.
**Also remove for 1 valley break (at strand-to-strand contact point) or one protruding or looped wire broken at strand-to-core contact point.

Wire breaks generally are seen in two locations on a rope; at the crowns of outer strands and in the valleys between outer strands.

Crown Wire Breaks

Valley Wire Breaks

4

Crown wire breaks usually are due to normal wear and typically have square ends. Valley breaks may indicate an abnormal condition, such as loss of core support, small sheave grooves or deterioration from unusually heavy rope loading.

When a wire has broken from excessive loading or a tensile overload, the ends of the wire will be pulled or necked down in diameter on each side of the break, in contrast to the typical square ends of crown wire breaks. In normal service, the wire breaks will exhibit characteristics of both axial loading and fatigue.

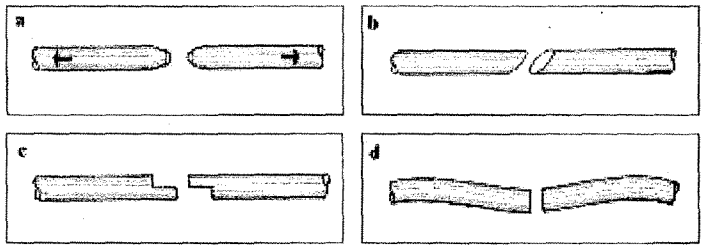

A wire broken under a tensile load that exceeds its strength is recognized by the "cup and cone" configuration at the fracture point (a). The *necking down* of the wire at this point shows that failure occurred while the wire retained its ductility. Shear-tensile fracture (b), usually exhibiting an angular flat plane failure surface, occurs in wire subjected to a combination of transverse and axial loads. Fatigue breaks are usually characterized by squared-off ends perpendicular to the wire either straight across or Z-shaped (c&d).

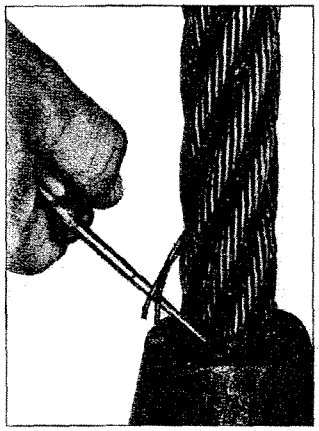

Wire Breaks at End Termination

TYPES OF WIRE BREAKS

As a wire rope moves over sheaves and drums, each strand and each wire in every strand moves and adjusts. Bending the rope or observing it moving slowly over a sheave can help the inspector find broken wires.

Once wire breaks appear, their numbers will increase if the rope continues in service.

Valley and strand-to-core contact point breaks are difficult to detect in a rope and must be taken very seriously. These types of wire breaks are indicative of conditions that result in internal degradation occurring at a faster rate than external degradation.

Wire breaks at rope terminations are also indicators of rope degradation. A single broken wire at a termination is usually reason to question continued use of a rope; more than one break is usually sufficient reason to remove the rope from service.

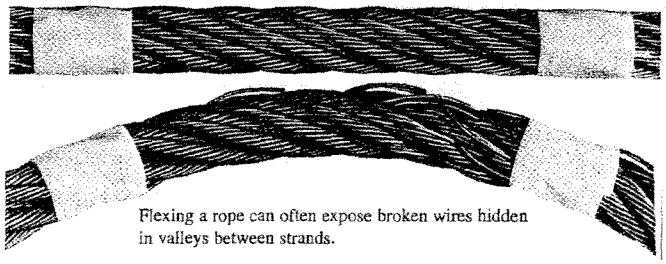

Flexing a rope can often expose broken wires hidden in valleys between strands.

5

HOW TO COUNT BROKEN WIRES

Criteria for wire breaks, provided in Table on page 4 have been published by OSHA, ASME and other industry and governmental organizations for specific applications. The criteria applied must be appropriate for the application and wire rope being inspected.

Allowable broken wires are stated either in relation to the rope's lay or multiples of rope diameter. Rope lay is one of the characteristics of wire rope that needs to be understood by a qualified inspector. Many industry standards and government regulations base the broken wire removal criteria on the number of wire breaks in a specified length or distance called a rope lay. Each wire rope has its own particular lay length. Just as the initial rope diameter was not determined until the rope had been installed, loaded and, ideally, broken in, the same practice should be followed with regard to the initial rope lay. The initial rope lay measurement should be recorded along with the initial rope diameter measurement.

To measure one rope lay, mark a spot on one strand, then with a finger, trace that strand along one complete wrap around the rope, then make another mark on the same strand. This distance beween the marks is one rope lay.

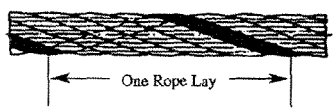

It is possible to measure rope lay by placing a sheet of paper on the rope and stroking the paper with the side of a pencil. The image can be used to measure the rope's lay length. Count the number of outer strands in the rope, mark a starting point on one strand impression; count the same number of impressions as the number of outer strands; and make another mark. The lay length is the distance between the marks made on the image.

By maintaining records of lay measurements at all inspections, a comparison can be made to detect changes in lay length that provides evidence of degradation. Any significant change in the rope's lay length between subsequent inspections is usually an indication that degradation has occured and a more careful inspection is warranted. To utilize this inspection and evaluation technique, the lay measurement comparisons must be made of impressions or measurements of the same section of rope on subsequent inspections.

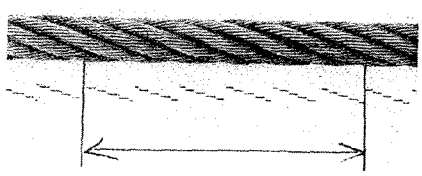

Imprint showing one rope lay.

SPECIALTY ROPES

Round strand wire rope designs that have been in use for more than a century have been replaced in numerous applications by several enhanced rope constructions. These include compacted ropes, compacted strand ropes, plastic filled ropes, plastic coated ropes, rotation resistant ropes, shaped-strand ropes, and coreless ropes.

The same inspection techniques apply to all ropes. The diameter, broken wires per specified interval, and change of lay length are important. Specialty ropes can pose challenges in determining operating limits and the necessity to remove from service. The rope manufacturer should be contacted for any specific instructions or recommendations.

PLASTIC ENHANCED ROPES

Wire breaks can occur in all plastic enhanced ropes, however in the case where the plastic inhibits visual inspection, normal broken wire criteria cannot always be applied. In plastic coated wire ropes diameter reduction can be a better indicator of rope degradation than visible broken wires. Removal criteria for these ropes are normally provided by the equipment manufacturer. In plastic filled ropes and plastic coated IWRC ropes, normal inspection techniques will detect broken wires, but they may be more difficult to find. Since the plastic covering the crown wires of plastic filled ropes is relatively thin and wears away quickly, finding crown wire breaks is similar to standard ropes. Valley breaks are more difficult to detect. If a valley wire break is detected, it is prudent to increase the frequency of inspections and to be conservative in assessing continued use of the rope.

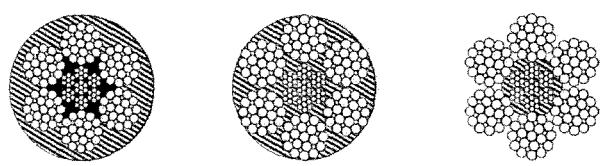

Plastic Coated Wire Rope | Plastic Filled Wire Rope | Plastic Coated IWRC Wire Rope

Plastic Processed Wire Rope Cross Sections.

Corrosion can occur in plastic enhanced ropes, and have the same effect as in standard ropes. Core condition and damage can be detected by diameter reduction and lengthening of lay.

Separation of plastic coating is not necessarily an indicator of rope deterioration, however, it indicates a potential problem, and warrants close observation.

COMPACTED ROPE AND COMPACTED STRAND ROPES

During manufacture, these specialty ropes are drawn through dies and/or swaged to compact the metal content of the rope. Strands may be compacted before the rope is closed, or the entire rope compacted.

When inspecting these ropes, follow basic guidelines. Diameter and lay measurement procedures are no different than with standard ropes. It is essential to record a new rope's actual diameter and lay length immediately after installation to establish the base line for comparison at future inspections.

Wire breaks can be more difficult to detect than in standard ropes, because the ends of the break do not always displace or separate. Any suspected wire break should be viewed with a magnifying glass to determine if it is a break. Bending the rope or observing it moving slowly over a sheave helps the inspector detect broken wires.

Due to compaction, the spaces between wires and strands inside a rope are minimized, and lubrication is critical so that sliding and adjusting of wires and strands is not restricted. The inspector should be observant to the lack of or need for lubricant.

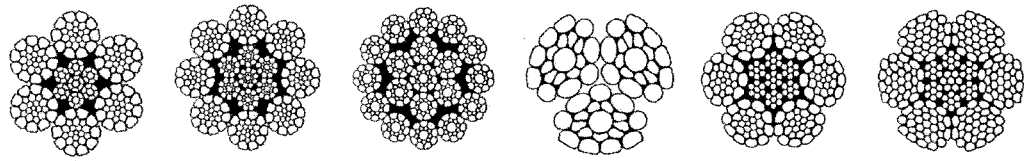

6 x 26 Warrington Seale Compacted Strand IWRC | 8 x 26 Warrington Seale Compacted Strand IWRC | 19 x 19 Seale Compacted Strand | 3 x 19 Seale Compacted (Swaged) | 6 x 26 Warrington Seale Compacted (Swaged) IWRC | 6 x 31 Warrington Seale Compacted (Swaged) IWRC

ROTATION RESISTANT ROPES

These wire ropes are designed so that the inner strands are laid counter to the outer strands. Under certain operating conditions, this design can result in accelerated internal wear. Careful initial measurements of diameter and lay are essential for comparisons in future inspections.

Inspection procedures are generally the same as other ropes; however, the broken wire removal criterion is more restrictive.

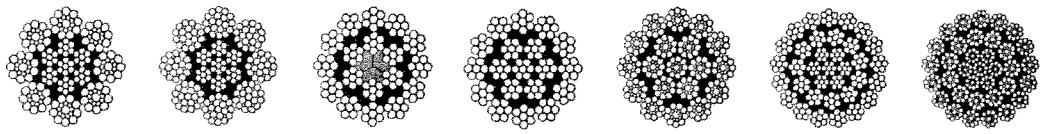

8 x 19 Seale IWRC | 8 x 25 Filler Wire IWRC | 18 x 7 FC | 19 x 7 | 19 x 19 Seale | 35 x 7 | 35 x 19 Seale

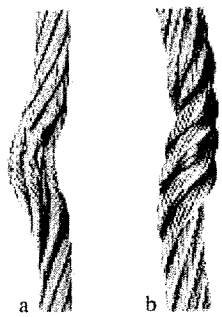

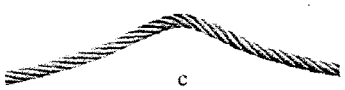

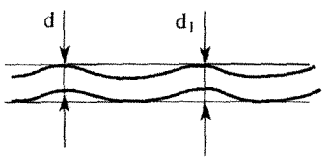

RESULTS OF ABUSE

Abuse from handling and poor operating conditions may cause damage and can result in reduced service life of the wire rope. It is important to recognize the effects of these abuses to properly assess rope serviceability.

Kinks (see Figure a&b left) are tightened loops with permanent strand distortion that result from improper handling when a rope is being installed or while in service. A kink happens when a loop is permitted to form and then is pulled down tight, causing permanent distortion of the strands. The damage is irreparable and the kink must be cut out or the entire rope taken out of service.

Doglegs (see Figure c) are permanent bends caused by improper use or handling. If the dogleg is severe, the rope should be removed from service. If the dogleg is minor, (exhibiting no strand distortion) and cannot be observed when the rope is under tension, the area of the minor dogleg should be marked for observation and the rope can remain in service.

Wavy rope occurs when one or more strands are misaligned with the rope body. This results from a variety of causes, including failure to properly seize the end of a rope prior to wedge socket installation; tight sheave grooves; or permitting torque or twist to develop during installation or operation. While not necessarily resulting in loss of strength, this condition may accelerate rope deterioration and requires increased frequency of inspections. Ropes must be removed from service when the height of the wave (d_1) measures more than 33% of the nominal rope diameter above the nominal rope diameter in sections not bending around a sheave or drum or more than 10% of the nominal rope diameter above the nominal rope diameter in sections bending around a sheave or drum.

IWRC or strand core protrusion between outer strands, commonly called bird caging or popped core, usually results from shock loading during operation, but can also be caused by improper handling. The damage is irreparable and the affected area must be cut out or the entire rope taken out of service.

Crushing or flattening of the strands or rope is caused by various factors, including poor spooling on a drum, heavy loading and even poor installation procedures. This can result in broken wires or the accelerated deterioration of the rope.

Abrasion (metal loss) and peening (metal deformation) occur when the rope contacts another metallic or abrasive surface, or from passing over the drum or sheaves. These result in the reduction of diameter and broken wires.

Corrosion is most often the result of a lack of lubrication. It may result in premature fatigue failure of individual wires. It is especially important to inspect ropes at end terminations.

Heat damage comes from any heat source such as welding, fire, power line strikes, or lightning. The damage is irreparable and the affected area must be cut out or the entire rope taken out of service.

Protruding broken wire is a condition where one outer wire is broken at the point of contact with the core of the rope and has worked its way out of the rope structure and protrudes or loops out from the rope structure.

The damage is irreparable and the affected area must be cut out or the entire rope taken out of service. There are occasions when a valley break (at strand to strand contact point) will protrude or raise above the surface of the rope. This also is a condition of serious concern and somewhat difficult to differentiate from a wire break at the strand to core contact point. When there are two or more valley breaks in a rope lay the affected area must be cut out or the rope taken out of service.

INSPECTION RECORDS

Periodic inspections require a permanent record of each rope on the equipment. The sample form included in this brochure may be copied and completed by the inspector for the permanent record. This form is designed to provide a road map for recording pertinent data as an inspection proceeds.

Any wire rope manufacturer that is a member of the Wire Rope Technical Board can provide inspection criteria, including recommendations and requirements of OSHA, ASME, ANSI, and other industry and governmental regulations.

Permanent records of inspections are required by OSHA and other governmental regulations, and will be used for reference at the next inspection. These can be kept with the operator and maintenance manuals for the application, or in permanent office files.

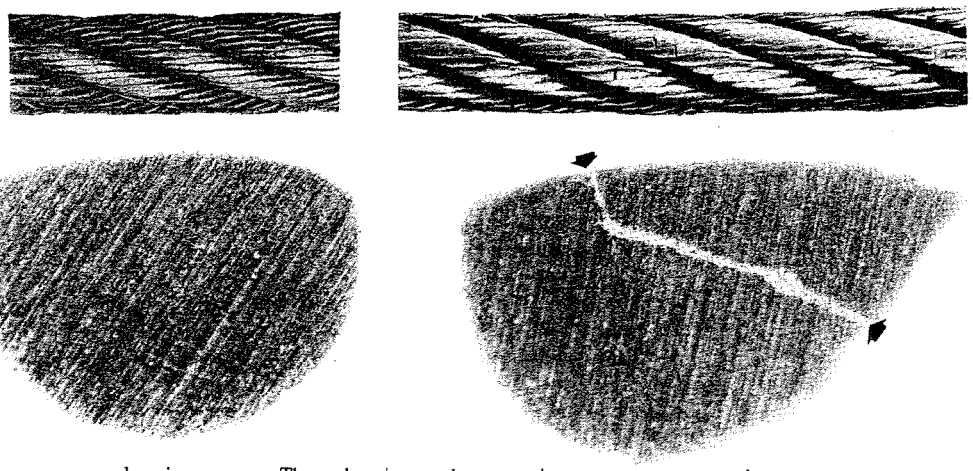

abrasion

These plan views and cross sections show the effects of abrasion and peening on wire rope. Note that a crack has formed as a result of heavy peening.

peening

DIAGNOSTIC GUIDE TO COMMON WIRE ROPE DEGRADATION

Mode	Symptoms	Possible Causes
Fatigue	Wire break is transverse--either straight across or Z shape. Broken ends will appear grainy.	Check for rope bent around too small a radius; vibration or whipping; wobbly sheaves; rollers too small; reverse bends; bent shafts; tight grooves; corrosion; small drums & sheaves; incorrect rope construction; improper installation; poor end terminations. (In the absence of other modes of degradation, all rope will eventually fail in fatigue.)
Tension	Wire break reveals a mixture of cup and cone fracture and shear breaks.	Check for overloads; sticky, grabby clutches; jerky conditions; loose bearing on drum; fast starts, fast stops, broken sheave flange; wrong rope size & grade; poor end terminations. Check for too great a strain on rope after factors of degradation have weakened it.
Abrasion	Wire break mainly displays outer wires worn smooth to knife edge thinness. Wire broken by abrasion in combination with another factor will show a combination break.	Check for change in rope or sheave size; change in load; overburden change; frozen or stuck sheaves; soft rollers, sheaves or drums; excessive fleet angle; misalignment of sheaves; kinks; improperly attached fittings; grit & sand; objects imbedded in rope; improper grooving.
Abrasion plus Fatigue	Reduced cross section is broken off square thereby producing a chisel shape.	A long term condition normal to the operating process.
Abrasion plus Tension	Reduced cross section is necked down as in a cup and cone configuration. Tensile break produces a chisel shape.	A long term condition normal to the operating process.
Cut or Gouged or Rough Wire	Wire ends are pinched down, mashed and/or cut in a rough diagonal shear-like manner.	Check on all above conditions for mechanical abuse, or either abnormal or accidental forces during installation.
Torsion or Twisting	Wire ends show evidence of twist and/or cork-screw effect.	Check on all the above conditions for mechanical abuse, or either abnormal or accidental forces during installation.
Mashing	Wires are flattened and spread at broken ends.	Check on all the above conditions for mechanical abuse, or either abnormal or accidental forces during installation. (This is a common occurrence on the drum.)

11

Wire Rope Inspection Form

Date _____ Inspector's Name _____ Inspector's Signature _____

Description of this installation/usage _____

Rope Description _____ Date Installed _____

Manufacturer's Identification / Reel No _____

Location on Rope	Measured Diameter	No. of Broken Wires in 1 Rope Lay	in 1 strand of 1 Lay	Measured Lay Length	Comments

End Attachment No. 1: Condition and Comment _____

End Attachment No. 2: Condition and Comment _____

Drum Condition and Comment _____

Sheaves Condition and Comment _____

Wire Rope Technical Board

HOIST LIMIT SWITCHES

The hoist limit switch is a safety device to prevent the bottom block from being over hoisted and contacting the equalizer sheave and possibly the upper hoist frame or trolley. Limit switches are designed to open electrical circuits and stop the motion of the hoist.

This hoist has two types of limit switch. The primary switch will be the geared switch, which count the revolutions of the drum in order to open a circuit when the hook block reaches a predetermined height or lowered to a predetermined level from the floor figure 8. The secondary limit switch will be weight operated. A circuit switch is held open by a suspended weight. When the hook block is raised to come into contact with the weight and relieves the tension holding the switch closed the circuit opens and the upward motion stops figure 7.

Limit switches are single point failure risk if only one of the above switches is present. Should the single limit switch fail the hoist will come into contact with equalizer sheave and would cause the wire rope to part with loss of load.

Limit switch shall receive an operational check to insure they are both operational.

HOIST LIMIT SWITCHES ~ FIGURE 7

PARTS LIST – PRODUCT SERIES 32

GRAVITY LIMIT SWITCH

Gravity Limit Switch Assembly 70265-01 — Used on Series 32 and Series 33 2PS, 2PD, and 4PD hoists.

Gravity Limit Switch Assembly 70265-02 — Used on Series 33 4PS, Series 34, and Series 35 hoists.

GRAVITY LIMIT SWITCH PARTS

ITEM NO.	PART NO.	DESCRIPTION	QTY. 70265-01	QTY. 70265-02
1	70262	Enclosure	1	1
2	PA3598	Bushing	(a)	(a)
3	69793	Arm	1	1
4	3-08-8C	Screw	1	1
5	70264	Cam	1	1
6	3-05-14C	Screw	2	2
7	PA7400	Spring	1	1
8	3-05-2C	Screw	3	3
9	3-010-6C	Screw	1	1
10	61717	Switch Unit	1	1
11	70263	Shaft	1	1
12	64104	Insulator	1	1
13	PA3810	Spring Pin	1	1
14	PA5165	Self-tapping Screw	2	2
15	69804	Cover	1	1
16	69805	Gasket	1	1
17	PA2242	Oval Cable Sleeve	2	2
18	PA3113	Wire Rope	A.R.	A.R.
19	69827	Weight Half	2	0
20	35-4-16C	Bolt	2	0
21	22-4C	Hex Nut	2	2
22	17-4C	Lockwasher	2	2
23	19-08C	Lockwasher, Int. Tooth	1	1
24	3-010-6C	Screw	0	1
25	30-01C	Hex Nut	0	1
26	35-4-24C	Bolt	0	2
27	A2007L1	Weight Half, Left	0	1
28	A2007R1	Weight Half, Right	0	1

No Recommended Spare Parts

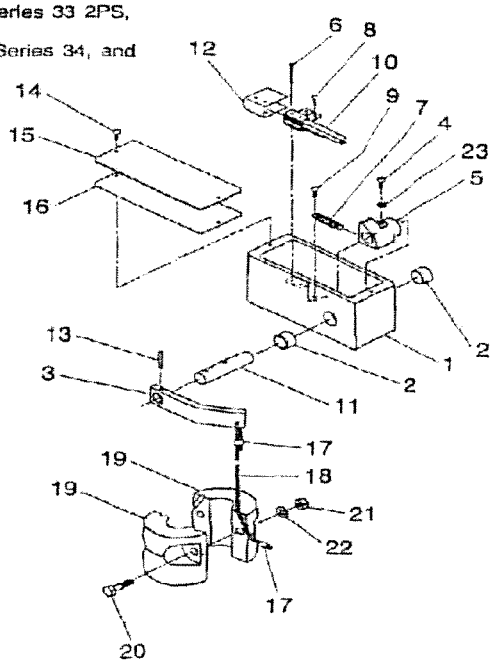

ASSEMBLY-01

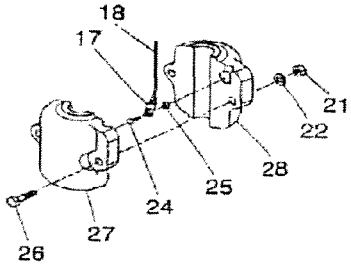

ASSEMBLY-02

NOTES:

(a) Included with Item 1.

(b) Gravity limit switch attached to hoist frame with two (2) Round Head Screws, Part No. 3-010-16C, and two (2) Locknuts, Part No. PA2423.

HOIST LIMIT SWITCHES ~ FIGURE 8

PARTS LIST – PRODUCT SERIES 32

GEARED LIMIT SWITCH

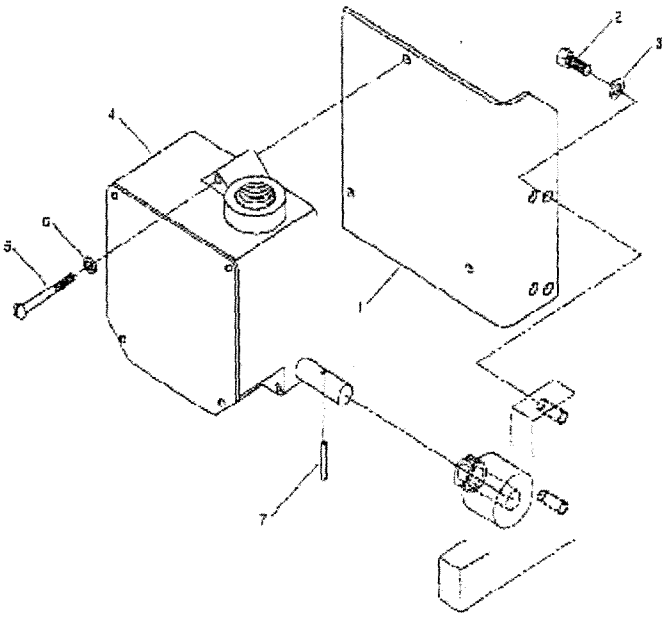

GEARED LIMIT SWITCH PARTS

ITEM NO.	PART NO.	DESCRIPTION	QTY
1	53965	Mounting Plate	1
2	35-4-8C	Hex Head Bolt	2
3	17-4C	Lockwasher	2
4 (a)	61649-07	Geared Limit Switch 2 Circuit - 40:1 Ratio - 38 Max. Turns	1
	61649-05	Geared Limit Switch 4 Circuit - 40:1 Ratio - 38 Max. Turns	1
	61649-08	Geared Limit Switch 2 Circuit - 80:1 Ratio - 75 Max. Turns	1
	61649-06	Geared Limit Switch 4 Circuit - 80:1 Ratio - 75 Max. Turns	1
	61649-01	Geared Limit Switch 2 Circuit - 111:1 Ratio - 104 Max. Turns	1
	61649-03	Geared Limit Switch 4 Circuit - 111:1 Ratio - 104 Max. Turns	1
5	3-010-24C	Round Head Screw	3
6	19-010C	Lockwasher	3
7	PA3810	Drive Pin	1

No Recommended Spare Parts

NOTE:

(a) For Geared Limit Switch selection, the maximum possible number of input shaft turns must be greater than the total number of grooves on a single reeved drum or the total number of grooves per side on a double reeved drum. With standard grooving, the following drum numbers are the maximum length drums on which the indicated switch ratios can be used.

40:1 Ratio can be used up to 2PS Drum Number 2 or 2PD Drum Number 5.
80:1 Ratio can be used up to 2PS Drum Number 4 or 2PD Drum Number 7.
111:1 Ratio can be used up to 2PS Drum Number 6 or 2PD Drum Number 8.

Page 16

FESTOON AND PENDENT CONTROL STATIONS

Power is supply to this crane by a suspended insulated power cord attached to the hoist. The cable designed to follow the crane as it moves along the monorail by means of hangers that slide or roll on a single support cable.

The hoist and trolley function are controlled by a sealed push button control box. The control box will have a power on or start button, emergency stop button, hoist button, hoist down button, and two buttons for trolling back and forth, figure 9.

The festoon and control system is not a single point failure risk.

Hoist Trolley Assembly

The function of the hoist trolley drive is to propel the hoist along the monorail. This trolley system consist of a mounting frame with two hoist connecting studs, a drive motor, a right angle gear box , motor brake, and trolley wheels.

This trolley is parallel mounted, four wheels one of which drive the trolley. The trolley motor is equipped with an electric motor brake and utilizes a worm drive gear box which serves a braking function.

Each trolley component will be examined in detail.

PENDENT CONTROL BOX ~ FIGURE 9

PARTS LIST – PRODUCT SERIES 32

PENDANT CONTROL STATION

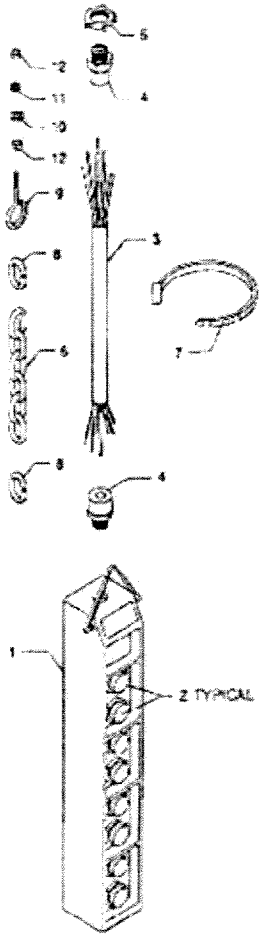

PUSHBUTTON STATION

PENDANT CONTROL STATION PARTS LIST

ITEM NO.	PART NUMBER	DESCRIPTION
1	86716-01	2-Button Enclosure
	86716-02	4-Button Enclosure
	86716-03	6-Button Enclosure
	86716-04	8-Button Enclosure
	86716-05	10-Button Enclosure
2	86716-06	Single Speed Button Assy
	86716-07	Two Speed Button Assy.
	86716-08	Three Speed Button Assy.
	86716-09	Five Speed Button Assy.
	86716-10	On Button (Green)
	86716-11	Off Button (Red)
	86716-12	Pilot Light (Red)
	86716-13	Two Position Maint. Selector Switch
	86716-14	Three Position Maint. Selector Switch
	86716-15	Push - Pull Operator (Maint.)
	86716-16	Red Mushroom Head Operator (Momentary)
	86716-17	Two Position Keylock Selector (Maint.)
	86716-18	2-Button Maint. Operator (Interlocked)
	86716-19	Contact Block (1 N.O. & 1 N.C.)
	86716-20	Closing Button (For Unused Holes)
	86716-21	P.B. Operator (Black, 1 N.O. & 1 N.C.)
3	82046	Cable, 16 AWG., 4 Cond.
	PA2513	Cable, 16 AWG. 8 Cond.
	PA2514	Cable, 16 AWG., 14 Cond.
	PA6706	Cable, 16 AWG., 24 Cond.
4	PA2427	Cable Grip 4 Cond. Cable
	PA6652	Cable Grip 8 Cond. Cable
	PA2517	Cable Grip 14 Cond. Cable
	PA6705	Cable Grip 24 Cond. Cable
5	PA1827	Locknut for PA2427 & PA6652
	PA2036	Locknut for PA2517
	PA1828	Locknut for PA6705
6	PA2034	Strain Relief Chain
7	PA6750	Self Locking Tie
8	PA2035	Chain Repair Link
9	PA5037	Eye Bolt
10	15-4-2C	Washer
11	17-4C	Lockwasher
12	22-4C	Nut
13	83178-01	Warning Label

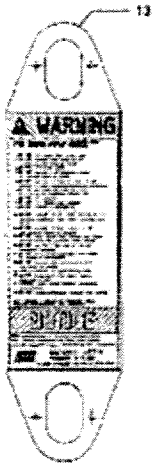

WARNING LABEL
83178-01
Replace Label
if Lost or Illegible

NOTE: When ordering pushbutton control cable or strain relief chain, specify length in feet. When specifying length of control cable, allow sufficient length to make connections inside of pushbutton station and control enclosure.

Page 23

TROLLEY ASSEMBLY

TROLLEY MOTOR

The trolley motor is rated at 50 ft. per minute and functions the same as the hoist motor. The trolley motor is not a single point failure risk. Should the motor fail, loss of load would not occur.

The operator should insure proper operation prior to the lift.

TROLLEY MOTOR BRAKE

The trolley motor brake, figure 10 while simpler, functions the same as the hoist motor brake. The trolley braking function is on a level plane is not as critical as the hoist brake. Should the trolley motor fail the spring set brake will set and stop the travel motion of the hoist. Further movement of the hoist will be stopped by the worm drive system which serves as a backup to the trolley brake.

The trolley motor brake is not a single point risk. The operator should perform a function check prior to the lift.

TROLLEY MOTOR BRAKE ASSEMBLY ~ FIGURE 10

PARTS LIST – PRODUCT SERIES 32

TROLLEY MOTOR BRAKE ASSEMBLY

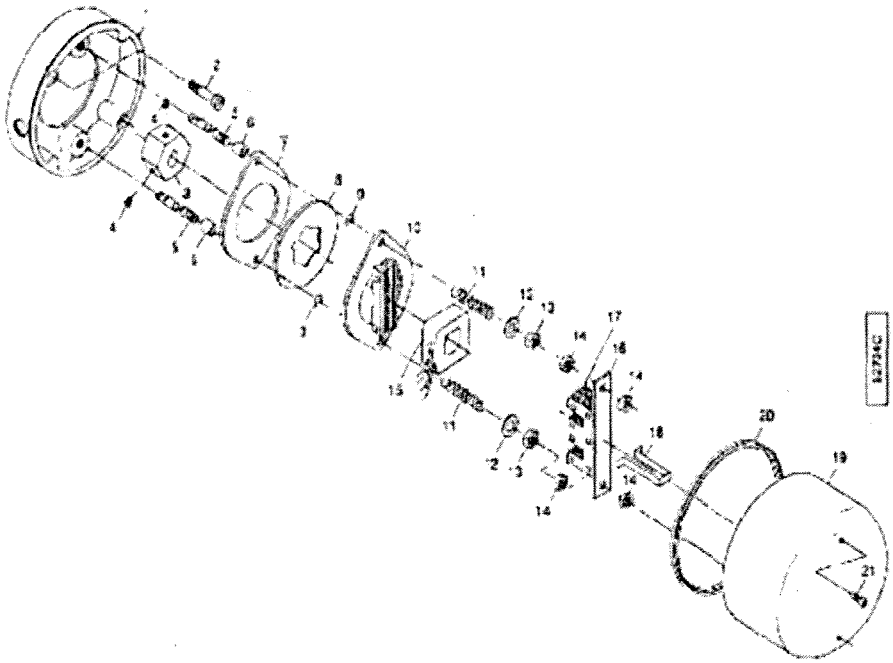

TROLLEY MOTOR BRAKE PARTS

ITEM NO.	PART NUMBER	DESCRIPTION	QTY/ ASSY
1	45853	Adapter	1
2	1-6-24	Bolt, 3/8-16 x 1-1/2 lg	2
3	45854	Hub	1
4	12-4-6	Set Screw	2
5	45855	Stud	2
6	51459	Spacer	2
7	39794	Brake Plate	1
8▲	39649	Brake Lining	1
9	PA5823	Retaining Ring	2
10	39781	Pressure Unit	1
11	PA5823	Spring	2
12	15-8-1	Flat Washer	2

ITEM NO.	PART NUMBER	DESCRIPTION	QTY/ ASSY
13	PA2377	Locknut	2
14	24-8	Jam Nut, 3/8	4
15▲		Coil	1
	39763-2	575 VAC	
	39763-3	230/460 VAC	
	39763-6	208 VAC	
16	39760	Magnet Unit	1
17	39764	Shading Coil (a)	2
18	39677	Coil Strap	1
19	63161	Brake Cover	1
20	PA7110	Gasket	1.77 ft
21▲	PA7325	Screw, LOC-WEL, #10-24 (b)	2

▲Recommended Spare Parts

(a) Shading Coil is furnished with Magnet Unit, but also available as a spare.

(b) Screw with self-locking feature must be utilized. Substitutes are not permissible.

(c) Trolley motor brake assembly shown on this page is the optional brake used on motorized right-angle gear reducer monorail trolley drives. For the optional brake used on motorized right-angle gear reducer top-running trolley drives, refer to additional information pages supplied with manual.

Page 34

TROLLEY GEAR BOX

The trolley drive or gear box is a right angle gear reducer figure. The gear box is not single point failure risk. Any failure of the trolley drive gear box cannot result in loss of load.

TROLLY GEAR BOX ~ FIGURE 11

PARTS LIST — PRODUCT SERIES 32

MOTORIZED TROLLEY
RIGHT-ANGLE GEAR REDUCER

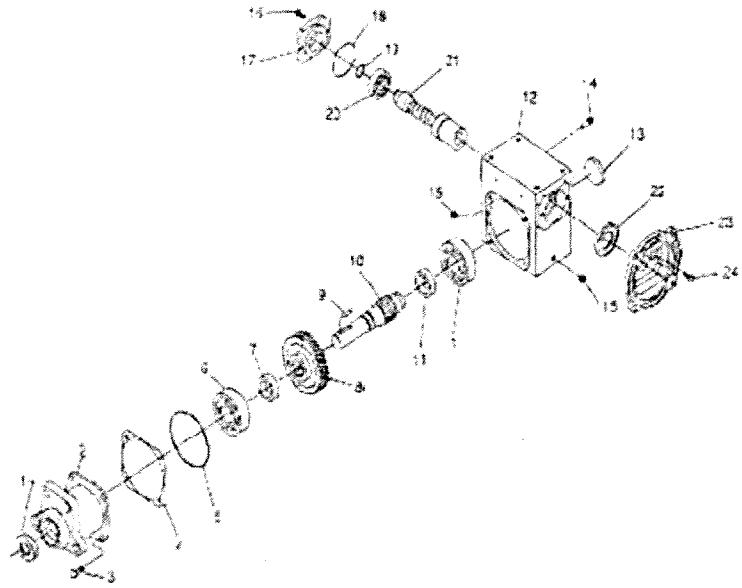

RIGHT-ANGLE GEAR REDUCER PARTS

ITEM NO.	PART NUMBER	DESCRIPTION	QTY/ ASSY
1	V93216A	Oil Seal	1 ▲
2	V28631C	Adapter	1
3	V91012A	Hex Head Cap Screw	4
4	V217T	Output Cover Shim	AR
5	V95759A	O-Ring	1
6	V40831	Output Bearing, Cone	2
	V40832	Output Bearing, Cup	2
7	VY175G	Gear Spacer	1
8	VG175G5	Worm Gear 5:1	1
	VG175G7	Worm Gear 7.5:1	
	VG175G10	Worm Gear 10:1	
	VG175G15	Worm Gear 15:1	
	VG175G20	Worm Gear 20:1	
	VG175G30	Worm Gear 30:1	
9	V40287	Woodruff Key	1
10	VS175G021	Output Shaft	1
11	VY175G	Gear Spacer	1
12	VH175G	Gear Housing	1

ITEM NO.	PART NUMBER	DESCRIPTION	QTY/ ASSY
13	V93224A	Expansion Plug	1
14	V41752	Vent Plug	1
15	V40411	Pipe Plug	4
16	V91012A	Hex Head Cap Screw	2
17	VC13N3	Input Cover	1
18	V95771A	O-Ring	1
19	V41050	Retaining Ring	1
20	V40257	Input Bearing	1
21	V36QW5A	Quill Input Shaft 5:1	1
	V36Q37A	Quill Input Shaft 7.5:1	
	V36Q37B	Quill Input Shaft 10:1	
	V36Q38B	Quill Input Shaft 15:1	
	V36Q39B	Quill Input Shaft 20:1	
	V36Q91B	Quill Input Shaft 30:1	
22	V93212A	Oil Seal	1 ▲
23	VF13Q3A	Quill Motor Flange	1
24	V91312A	Hex Head Cap Screw	2

▲ Recommended Spare Parts

NOTE:
Approximate capacity of oil bath is 1 pint. Refer to Lubrication section of Manual 69910.

TROLLEY DRIVE WHEELS

This trolley has four 4 inch tapered trolley wheels one of which is a drive wheel. The wheels have a flat track taper mounted on a six inch patented monorail beam. The wheels are secured to the mount with washers and a hex nut and cotter key.

The trolley wheels are a single point failure risk. The wheels have an equal number of washers on each wheel, figure 12 to insure proper alignment and to prevent the trolley from coming off the monorail. The trolley wheel frame has two horizontal mounting studs which pass two vertical mounting studs on the hoist mounting frame, figure 13. The mounting studs on the trolley and the hoist frame are single point failure risk.

The trolley wheels and mounting studs shall be inspected during the pre-lift meeting by the operator, lift coordinator, or other lift team member. Inspection shall include proper spacing of the wheels. The wheels should not have more than ¼ inch of clearance on each side. Check for excessive surface wear or damage and insure all wheels move freely. The mounting studs shall be inspected for any signs of distortion or bending, horizontal studs shall have all bolts, pins, and keys in place.

TROLLEY DRIVE WHEELS ~ FIGURE 12

PARTS LIST - PRODUCT SERIES 32

2-WHEEL PLAIN TROLLEY ASSEMBLY
4 IN. DIAMETER WHEEL - NON-SWIVELING - TWO MOUNTING STUDS

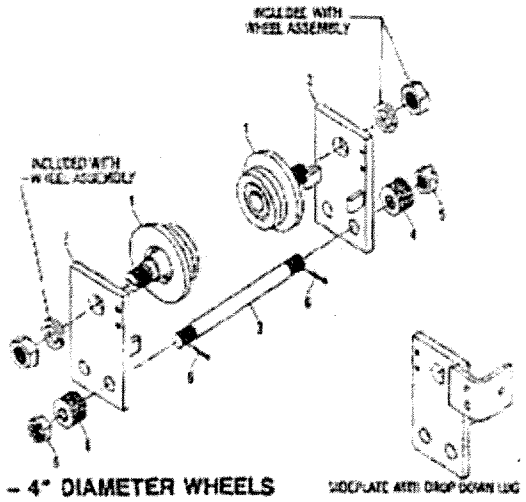

TROLLEY PARTS - 4" DIAMETER WHEELS

TROLLEY ASSEMBLY	BEAM FLANGE WIDTH (inches)	DROP DOWN LUGS	WHEEL ASSEMBLY 2 PER TROLLEY		SIDEPLATE 1 PER TROLLEY	SIDEPLATE 1 PER TROLLEY	STUD 2 PER TROLLEY	WASHER		NUT 4 PER TROLLEY	COTTER PIN 4 PER TROLLEY
			MATL	ITEM 1	ITEM 2	ITEM 2	ITEM 3	QTY/TRLY	ITEM 4	ITEM 5	ITEM 6
69824-01	3-1/4 to 5	No	Steel Dual Tread	69810-01	69818-01	69813-01	69812-01	36	15-16-IC	26-16	PA1521
69824-02	5-1/8 to 8						69812-02	60			
69824-03	8-1/8 to 10-1/2				69821-01	69821-01	69812-03	44			
69824-23	10-5/8 to 12-1/2				69821-04	69821-04	69812-04				
69824-24	12-5/8 to 14				69821-07	69821-07	69812-05				
69824-04	3-1/4 to 5		Bronze Dual Tread	69810-02	69818-01	69813-01	69812-01	36			
69824-05	5-1/8 to 8						69812-02	60			
69824-06	8-1/8 to 10-1/2				69821-01	69821-01	69812-03	44			
69824-25	10-5/8 to 12-1/2				69821-04	69821-04	69812-04				
69824-26	12-5/8 to 14				69821-07	69821-07	69812-05				
69824-07	3-1/4 to 5	Yes	Steel Dual Tread	69810-01	69818-02	69813-03	69812-01	33			
69824-08	5-1/8 to 8						69812-02	60			
69824-09	8-1/8 to 10-1/2				69821-02	69821-03	69812-03	44			
69824-29	10-5/8 to 12-1/2				69821-05	69821-06	69812-04				
69824-30	12-5/8 to 14				69821-08	69821-09	69812-05				
69824-10	3-1/4 to 5		Bronze Dual Tread	69810-02	69818-02	69813-03	69812-01	33			
69824-11	5-1/8 to 8						69812-02	60			
69824-12	8-1/8 to 10-1/2				69821-02	69821-03	69812-03	44			
69824-31	10-5/8 to 12-1/2				69821-05	69821-06	69812-04				
69824-32	12-5/8 to 14				69821-08	69821-09	69812-05				
69824-13	3-1/4 to 5 (a)	No	Steel Flat	69888-01	69818-01	69813-01	69812-01	33			
69824-14	3-1/4 to 5 (a)		Bronze Flat	69888-02							
69824-15	3-1/4 to 5 (a)	Yes	Steel Flat	69888-01	69818-02	69813-03					
69824-16	3-1/4 to 5 (a)		Bronze Flat	69888-02							

No Recommended Spare Parts

NOTE: (a) For operation on patented monorail track.

Page 24

LOAD BAR ASSEMBLY ~ FIGURE 13

PARTS LIST – PRODUCT SERIES 32

LOADBAR ASSEMBLY OR FRAME ASSEMBLY
FOR SWIVELING TROLLEYS - PARALLEL MOUNTED HOIST

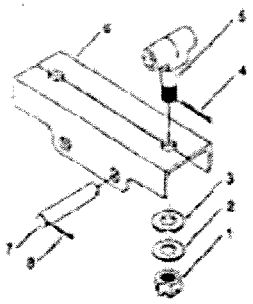

FIGURE A - LOADBAR ASSEMBLY
2 PART SINGLE DRUM NO. 1, 2

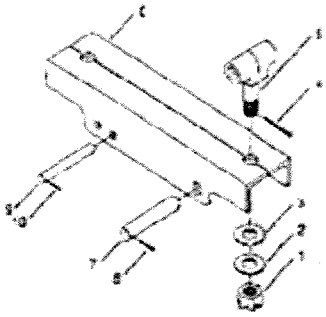

FIGURE B - LOADBAR ASSEMBLY
2 PART SINGLE DRUM NOS. 3, 4, 5, 6

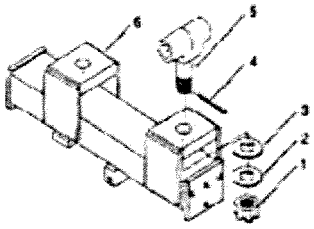

FIGURE C - FRAME ASSEMBLY
2 PART DOUBLE DRUM NOS. 4, 5, 6, 7, 8

LOADBAR PARTS

REFER TO FIGURE		A		B		C	
ITEM NO.	DESCRIPTION	PART NUMBER	QTY	PART NUMBER	QTY	PART NUMBER	QTY
1	Hex Slotted Nut	26-28	2	26-28	2	26-28	2
2	Thrust Washer	A4421	2	A4421	2	A4421	2
3	Thrust Bearing	A4420	2	A4420	2	A4420	2
4	Cotter Pin	PA1484	2	PA1484	2	PA1484	2
5	Suspension Stud	63100	2	63100	2	63100	2
6	Loadbar or Frame Unit	69859 (b) 70717	1	69860-03 (a) 69860-04 69860-05 69860-06	1	69863-04 (a) 69863-05 69863-06 69863-07 69863-08	1
7	Pin	63208-02	2	63208-02	1	-	-
8	Cotter Pin	PA1932	4	PA1932	2		-
9	Pin	-	-	63299	2	-	-
10	Cotter Pin	-	-	PA1518	4	-	-

No Recommended Spare Parts

NOTES:

For trolley parts, refer to pages 25, 26, and 27.

(a) Dash number (-03, -04 etc.) indicates corresponding hoist drum length.
Example: 69860-03 for Drum No. 3, 69860-04 for Drum No. 4, etc.

(b) Part number 69859 is for Drum No. 1.
Part number 70717 is for Drum No. 2.

Page 37

HOIST SPECIFICATIONS ~ FIGURE 14

11-08-3201-20
Revision E
Page 1 of 2
7/14/2003

SOLD TO: WILLIAMSON & WILMER INC

SERIAL NO. 532-20-13411

Date Shipped

SERIES 32 HOISTS - 2 to 5 TON - 2PD Processed By R DEHOFF / EMW Date 9/1

Production Order 1298851.1 Register No. 1298851 Customer P.O. 4267

Total Units 1 Scheduled Completion 10/23/2009 Assy L/T 2 Wks.

Product No. C2W05D020-15M2D1 Mod 20 Capacity 5 Tons Reeved 2PD Lift

Lifting Speed 15 FPM Power Supply: 460 Volts 3 Ph 60 Hz Wiring Class 3R

Control Circuit 115 VAC Brake Circuit 90 VDC Circuit Ampacity 7.2 Amps

Mounting: [ ] Lug [ ] Plain Trolley [ ] Hand Geared Trolley [X] Motorized Trolley

Trolley Speed 50 FPM Beam NA Flange Width 6-1/4" FL FLG 1/2" THICK

* any items require special handling, mark SP in QTY/UNIT column. List specifications for these items on Modification Parts List, Form

GEAR HOUSING ASSEMBLY Check one.

1	X	69750-01X	Gear Housing Assembly 15 FPM
		69750-02X	Gear Housing Assembly 22 FPM
		69750-03X	Gear Housing Assembly 30 FPM.

HOIST MOTOR - 3 PHASE, 60 HERTZ Check one.

						30 FPM	22 FPM	15 FPM	
1		69777-01	200 V	3 HP - 1800 RPM	Single Speed	N/A	2 TON	2 - 3 TON	
		69777-02	230/460 V						
		69777-03	575 V						
		69777-04	200 V	5 HP - 1800 RPM		2 TON	3 TON	5 TON	
		69777-05	230/460 V						
		69777-06	575 V						
		69778-01	200 V	3 / 1 HP 1800 / 600 RPM	Two Speed	N/A	2 TON	2 - 3 TON	
		69778-02	230 V						
		69778-03	460 V						
		69778-04	575 V						
		69778-05	200 V	5 / 1.67 HP 1800 / 600 RPM		2 TON	3 TON	5 TON	(N
		69778-06	230 V						
		69778-07	460 V						
		69778-08	575 V						

MOTOR BRAKE PARTS Check one.

1		69757-01	3 HP Motors	18 Ft-Lb	
		69757-02	5 HP Motors	33 Ft-Lb	

FIGURE 14 - CONTINUED

Revision E
Page 2 of 2
7/14/03

FRAME & DRUM PARTS Check one.						HM
1	X	69756-05 M	20 Ft Lift Drum No. 4		69756-08	85 Ft Lift Drum No. 8
		69756-06	36 Ft Lift Drum No. 6		69756-11	26 Ft Lift Drum No. 5 (Non-Standard Lift)
		69756-07	60 Ft Lift Drum No. 7			

WIRE ROPE - 3/8" DIA. XIP Check one.						HM
1	X	69728-04	20 Ft Lift Drum No. 4		69728-08	85 Ft Lift Drum No. 8
		69728-06	36 Ft Lift Drum No. 6		69728-05	26 Ft Lift Drum No. 5 (Non-Standard Lift)
		69728-07	60 Ft Lift Drum No. 7			

LOADBLOCK ASSEMBLY Check one. Steel Sheaves are Standard. Check Nylon only when specified on register.						HM
1		69554-01X	Standard Hook Nylon Sheaves	X	69554-04X	Standard Hook Steel Sheaves
		69554-02X	Bullard Hook Nylon Sheaves		69554-05X	Bullard Hook Steel Sheaves
		69554-03X	Bronze Hook Nylon Sheaves		69554-06X	Bronze Hook Steel Sheaves

CAPACITY PLATES Check one.						HM
		British Ton			Metric Ton	
2		69683-020	2 Ton		69683-1020	2 tonne
		69683-030	3 Ton		69683-1030	3 tonne
	X	69683-050	5 Ton		69683-1050	5 tonne

OVERLOAD CUTOFF Check one.				HM
1		39169-04	2 & 3 Ton	Standard Overload
	X	39170-04	5 Ton	
		39169-05	2 & 3 Ton	Overload when Warning Horn or Light is specified
		39170-05	5 Ton	

EQUALIZING SHEAVE Check one. Steel Sheaves are Standard. Check Nylon only when specified on register.				HM
1		69746	Nylon Sheave	
	X	69775	Steel Sheave	

MISCELLANEOUS ITEMS				HM
1	X	69843-01	Serial plate, drive screws, manual, plastic bag.	
.50 Gal	X	57901-01	Paint (Yellow)	

GEARED LIMIT SWITCH Check one only when specified on register.						HM
1	X	71501-01	2 Circuit Wright	1 : 1 Ratio	62.0 Max. Input Shaft Turns	Use on Standard Drum No's. 4, 5 & 6
		71501-02		1 : 1 Ratio	83.3 Max. Input Shaft Turns	Use on Standard Drum No. 7
		71501-03		2 : 1 Ratio	124.0 Max. Input Shaft Turns	Use on Standard Drum No. 8
		69779-12	4 Circuit G. E.	40 : 1 Ratio	38.0 Max. Input Shaft Turns	Use on Standard Drum No's. 4 & 5
		69779-14		80 : 1 Ratio	75.0 Max. Input Shaft Turns	Use on Standard Drum No's. 6 & 7
		69779-02		111 : 1 Ratio	104.0 Max. Input Shaft Turns	Use on Standard Drum No. 8
				Note: Maximum No. of Input Shaft Turns must exceed Total No. of Grooves per Side of Drum.		

COUNTERWEIGHT ASSEMBLY Check as required. Refer to Drawing D70098 for additional assemblies.					HM
1	X	71032-22 M	Drum No. 4	124 LB.	
		70098-17	Drum No. 5	110.1 LB.	
		70098-05	Drum No. 6	121.5 LB.	
		70098-07	Drum No. 7	157.7 LB.	
		70098-09	Drum No. 8	193.9 LB.	

Note: Do Not Check Counterweight Assembly for Lug Mounted Hoists Unless Specified on Register.
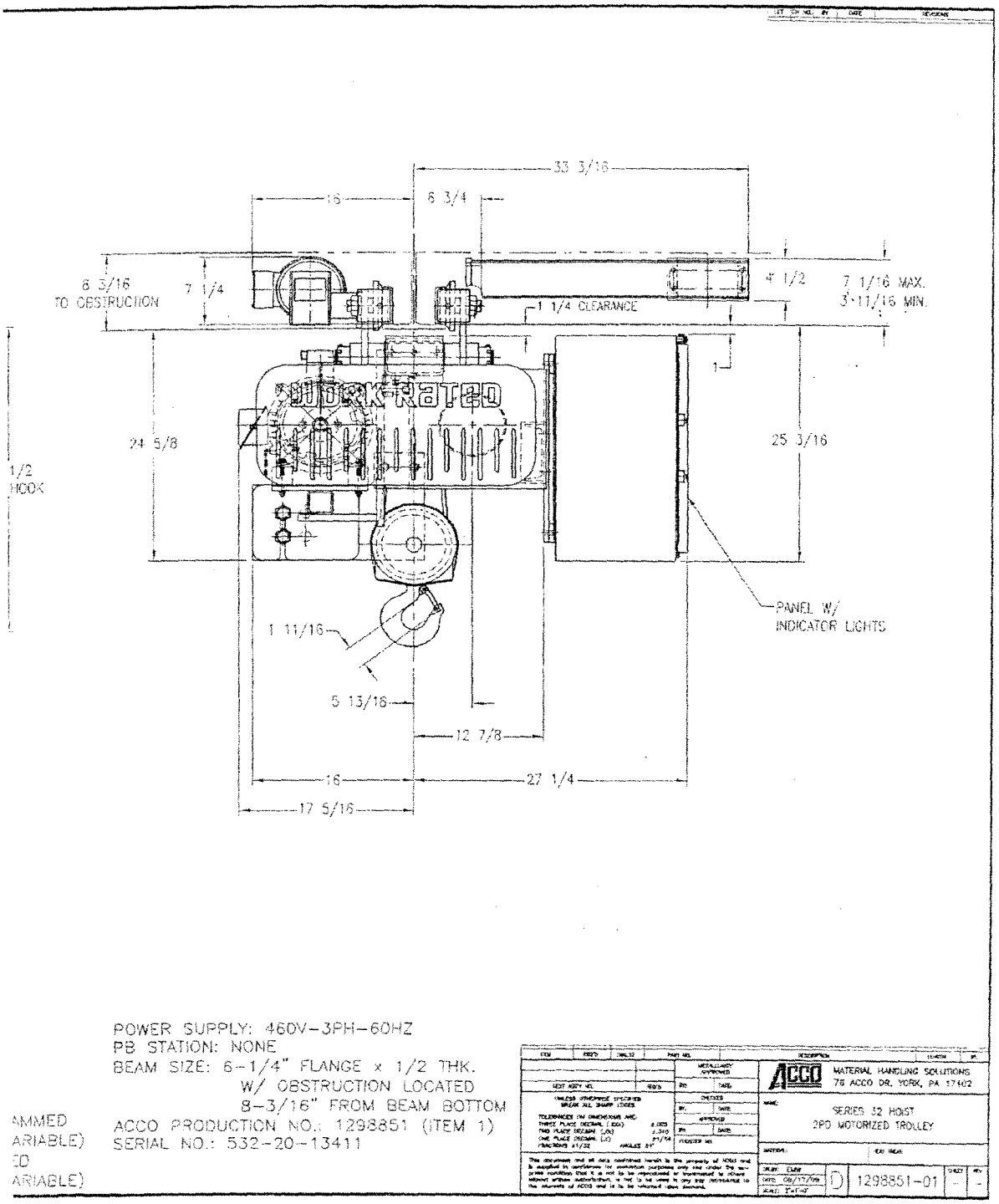
FIGURE 14 - CONTINUED